OFFICE OF THE BUILDING INSPECTOR
Village of Hastings On Hudson
Municipal Building
7 Maple Avenue
Hastings On Hudson, New York 10706
(914) 478-3400 Ext. 613
Fax: (914) 478-4624
BldgInsp@Hastingsgov.org

LICENSED PROFESSIONAL AFFIDAVIT for RESIDENTIAL SOLAR SYSTEMS

TO BE SUBMITTED AS PART OF THE PERMIT APPLICATION

AFFIDAVIT OF ARCHITECT OR ENGINEER

State of New York }
ss.: County of Westchester
}

I the undersigned, under penalty of perjury, do hereby affirm:

1. I am an the (architect)(engineer) duly licensed in the State of New York

a) I am the NYS licensed design professional named in the Application for a Building Permit for a residential solar system located at 9 RIDGE STREET, Hastings-on-Hudson, New York 10706.

b) I have inspected the existing building and structure and find that the existing structure with the proposed solar panel installation and connections to the existing roof meet the minimum criteria set forth in:

Applicable Codes:	2010 Residential Code of New York State
	2001 Wood Frame Construction Manual
Design Roof Load:	30 psf live load, 115 psf dead load, 45 psf total load
Design Wind Load:	100 mph, 35spf

OR have proposed additional measures to ensure compliance with above.

4. I have reviewed the following submitted drawings and/or manufacturer specifications as part of the submission
List applicable plans with revision dates:
S-1 3/10/17 (rev date)
S-2 3/9/17 (rev date)
E-1 4/28/16 (rev date)
(rev date)
OPSUN PV01 1-14 (rev date)
2/14/17 (rev date)

5. The plans, drawings and specifications for the Building Permit are requested and listed above, as submitted (a)-were prepared by me or under my supervision, and (b)-to the best of my knowledge comply with the requirements of the Residential Building Code of New York State as adopted by the Village of Hastings-on-Hudson, applicable design loads and all other applicable laws, rules and regulations governing building construction.

Signature

(Architect) (Engineer)

Sworn to before me this
10th day of March, 2017.

Notary Public

NOTARY PUBLIC NOTARY SEAL STATE OF MISSOURI

H. L. FORBIS
My Commission Expires
May 11, 2017
St. Charles County
Commission #13709541

914.762.7622
www.sunrisesolarllc.com

AUTHORIZATION TO ACT AS AGENT

RE: Building Department

Village of Hastings

Municipality

Date

I, Debra Cantor, authorize Sunrise Solar Solutions, LLC and its employees to act on my behalf with all matters concerning the installation of a solar panel electrical system located at:

Residence of

Commercial Property/Residence of

9 Ridge Street

Street Address

Hastings-on-Hudson, NY 10706

City, State, Zip

(Area Code) Phone Number

I authorize Sunrise Solar Solutions, LLC to file a building permit for this project on my behalf and also give Sunrise Solar Solutions, LLC permission to access a copy of this property's survey, site plans, and building plans.
Please do not hesitate to contact us at 914.762.7622 regarding any questions or if you require additional information.

Debra Cantore (Mar 21, 2016)

Customer Signature

Debra Cantor

Printed Name

APPLICATION FOR MECHANICAL PERMIT

THE VILLAGE OF HASTINGS-ON-HUDSON I 7 Maple Ave, Hastings-on-Hudson NY 10706

Job Number		167310	**Date**	3/23/2017 9:08:54 AM
Job Location	9 RIDGE STREET		Parcel ID	4.70-52-47.4
Property owner	Debra Cantor		Property class	1 Family Res
Occupancy			Zoning	

Applicant

Douglas Hertz(914-762-7622)

510 North State Road

Contractor

Sunrise Solar Solutions LLC (914-762-7622)

510 North State Road

Contractor License information

License Name	License Number	Expiration

Description of work

Type of work	**Solar Panel**		**Applicant is**	Contractor
Requested by	The Owner		In association	
Est. cost of work		$21,891	Property class	1 Family Res

Description of work

Roof Mounted Installation of Solar Panels

Please Note: Completing the application form does not constitute a permit to commence construction. To obtain your permit follow the instructions on the instruction page provided on page 3.

Job Number **167310**

Job Location 9 RIDGE STREET Parcel ID 4.70-52-47.4

AFFIDAVIT OF APPLICANT

I: **Douglas Hertz** being duly sworn, depose and says: That s/he does business as: **Sunrise Solar Solutions LLC** with offices at: **510 North State Road** and that s/he is:

- ☐ The owner of the premises described herein.
- ☐ The _____ of the New York Corporation _____ with offices at: _____ duly authorized by resolution of the Board of Directors, and that said Corporation is duly authorized by the Owner to make this application.
- ☒ A General Partner of Sunrise Solar Solutions, LLC with offices at 510 N State Rd, Briarcliff Manor, NY and that said Partnership is duly authorized by Owner to make this application.
- ☐ The Lessee of the premises, duly authorized by the owner to make this application.
- ☐ The Architect or Engineer duly authorized by the owner to make this application.
- ☒ The contractor authorized by the owner to make this application.

That the information contained in this application and on the accompanying drawings is true to the best of his knowledge and belief. The undersigned hereby agrees to comply with all the requirements of the New York State Uniform Fire Prevention and Building Code, the Village of Hastings-on-Hudson Building Code, Zoning Ordinance and all other laws pertaining to same, in the construction applied for, whether or not shown on plans or specify in this application.

Sworn to before me this 23 day of March of 2017

LEE STREISFELD-LEITNER
Notary Public, State of New York
Reg. No. 01ST6347662
Qualified in Westchester County
My Commission Expires 8/29/2020

Notary Public/ Comm. of Deeds

Applicant's Signature

OWNER'S AUTHORIZATION

I: **Debra Cantor** as the owner of the subject premises and have authorized the contractor named above to perform the work under the subject application.

Sworn to before me this _____ day of 2013

Owner phone number _____ Owner email address _____

Notary Public/ Comm. of Deeds

Owner's Signature

See Agent Ltr Attached

Sunrise Solar SOLUTIONS

914.762.7622
www.sunrisesolarllc.com

AUTHORIZATION TO ACT AS AGENT

RE: Building Department

Village of Hastings

Municipality

Date

I, Debra Cantor, authorize Sunrise Solar Solutions, LLC and its employees to act on my behalf with all matters concerning the installation of a solar panel electrical system located at:

Residence of

Commercial Property/Residence of

9 Ridge Street

Street Address

Hastings-on-Hudson, NY 10706

City, State, Zip

(Area Code) Phone Number

I authorize Sunrise Solar Solutions, LLC to file a building permit for this project on my behalf and also give Sunrise Solar Solutions, LLC permission to access a copy of this property's survey, site plans, and building plans.
Please do not hesitate to contact us at 914.762.7622 regarding any questions or if you require additional information.

Debra Cantore (Mar 21, 2016)

Customer Signature

Debra Cantor

Printed Name

OFFICE OF THE BUILDING INSPECTOR
Village of Hastings On Hudson
Municipal Building
7 Maple Avenue
Hastings On Hudson, New York 10706
(914) 478-3400 Ext. 613
Fax: (914) 478-4624
BldgInsp@Hastingsgov.org

LICENSED PROFESSIONAL AFFIDAVIT for RESIDENTIAL SOLAR SYSTEMS

TO BE SUBMITTED AS PART OF THE PERMIT APPLICATION

AFFIDAVIT OF ARCHITECT OR ENGINEER

State of New York }
ss.: County of Westchester
}

I the undersigned, under penalty of perjury, do hereby affirm:

1. I am an the (architect)(engineer) duly licensed in the State of New York

a) I am the NYS licensed design professional named in the Application for a Building Permit for a residential solar system located at 9 RIDGE STREET, Hastings-on-Hudson, New York 10706.

b) I have inspected the existing building and structure and find that the existing structure with the proposed solar panel installation and connections to the existing roof meet the minimum criteria set forth in:

Applicable Codes:	2010 Residential Code of New York State
	2001 Wood Frame Construction Manual
Design Roof Load:	30 psf live load, 115 psf dead load, 45 psf total load
Design Wind Load:	100 mph, 35spf

OR have proposed additional measures to ensure compliance with above.

4. I have reviewed the following submitted drawings and/or manufacturer specifications as part of the submission
List applicable plans with revision dates:
S-1 3/10/17 (rev date)
S-2 3/9/17 (rev date)
E-1 4/28/16 (rev date)
(rev date)
OPSUN PV01 1-14 (rev date)
2/14/17 (rev date)

5. The plans, drawings and specifications for the Building Permit are requested and listed above, as submitted (a)-were prepared by me or under my supervision, and (b)-to the best of my knowledge comply with the requirements of the Residential Building Code of New York State as adopted by the Village of Hastings-on-Hudson, applicable design loads and all other applicable laws, rules and regulations governing building construction.

Signature

(Architect) (Engineer)

Sworn to before me this
10th day of March, 2017.

Notary Public

NOTARY PUBLIC NOTARY SEAL STATE OF MISSOURI

H. L. FORBIS
My Commission Expires
May 11, 2017
St. Charles County
Commission #13709541

INSTRUCTIONS/ CHECK LIST

Job Number **167310**

Job Location 9 RIDGE STREET Parcel ID 4.70-52-47.4

To obtain your permit, you will need to deliver to the building department the following:

- ☒ Three (3) copies of signed/ notarized application form
- ☒ A copy of the manufacturer's cut/ spec sheet for all proposed equipments. (HVAC min. 16 seer)
- ☒ A permit fee will be determined after the review of your application.
- ☒ Owners phone number and email entered in the online permit application
- ☒ Evidence of Workers' Compensation Insurance (on a C-105 or equivalent)
- ☒ Evidence of Liability Insurance naming the Village of Hastings on Hudson as additionally insured
- ☒ A copy of the contractor's Westchester Co. Department of Consumer Affairs License (not applicable for HVAC)

Note: Please be advised, under ***new*** State and Municipal Laws, the Workman's Compensation and disability benefits insurance must be submitted on separate State approved forms. The "Acord Form" are no longer acceptable proof of Workman's Compensation coverage. Further information or questions may be answered by calling the NYS Bureau of Compliance at (518) 486. 6307 or by visiting their website: www.wcb.state.ny.us or by contacting the insurance provider.

OFFICE OF THE BUILDING INSPECTOR
Village of Hastings On Hudson
Municipal Building
7 Maple Avenue
Hastings On Hudson, New York 10706
(914) 478-3400 Ext. 613
Fax: (914) 478-4624
BldgInsp@Hastingsgov.org

PHOTOVOLTAIC (PV SOLAR) RESIDENTIAL SYSTEMS PERMIT APPLICATION CHECK LIST

It is suggested that all applicants applying for a permit read and understand the manufacturer's installation instructions prior to applying for a Building Permit.

REQUIREMENTS TO APPLY FOR A PHOTOVOLTAIC (PV SOLAR) SYSTEM PERMIT

- ☑ 1) Apply online at www.hastingsgov.org for a Building Permit, and along with your application submit to the Building Department the following;
- ☑ 2) Owners phone number and email address entered in the online permit application
- ☑ 3) Evidence of Workers' Compensation Insurance (on a C-105 or equivalent)
- ☑ 4) Evidence of Liability Insurance naming the Village of Hastings on Hudson as additionally insured
- ☑ 5) A copy of the contractor's Westchester County Department of Consumer Affairs License
- ☑ 6) An affidavit from a NYS licensed professional detailing and certifying that the existing structure meets or exceeds the minimum load requirements as per TABLE R301.2(1) for wind load before and after installation of the proposed equipment or the proposed upgrades to the existing structure to accomplish the aforesaid
- ☑ 7) Drawings (signed and sealed by a NYS licensed professional) of the roof plan showing the following criteria:
  - a) All arrays of proposed PV panels on all roof surfaces
  - b) Arrays maintaining a 18" setback from all ridges, hips and valleys or surface that abuts another adjacent roof
  - c) Arrays maintaining a 24" setback from all single aisles such as gable ends
- ☑ 8) Drawings or manufacturer's cut sheets of the array mounting hardware and interconnection diagram and specifications
- ☑ 9) Drawings or manufacturer's cut sheets of the unit mount and roof penetration's flashing system
- ☑ 10) 3 wire diagram showing all proposed equipment as governed by the National Electric Code (NEC)
- ☑ 11) A diagram showing all proposed labels and labeling locations including; Solar AC Disconnect, Inverter Output Connection, Warning: Duel Power Source, Warning: PV combiner Panel, Solar PV Circuits Only, Solar Production Meter and Rapid Shutdown of solar system (see attached sample sheet)
- ☑ 12 A Fire Department AC disconnect, located outside the dwelling next to the utility meter and/or Notice of NEC required Rapid Shutdown of PV systems on Buildings as per section 690.56(c) of the National Electric Code (NEC)
- ___ 13) Separate electrical permit application by a Westchester County Department of Licensing licensed Electrician, with all required insurances and the appropriate fee (must be filed by the licensed contractor)
- ☑ 14) Submit signed checklist with submission and appropriate permit fees

Applicant Name: Douglas Hertz, President **Signature:** _____ **Date:** _____

By signing this form, you attest to reading the manufacturer's installation instructions and that all the information asked for above has been submitted and that the submitted information is correct

Note: This list is given to assist in the application process. It is not intended to be a replacement for the Building or Zoning Code, County or State Regulations or Consolidated Edison requirements. Unique and special projects may require additional information.

Hours of construction: Monday–Saturday 7:30 a.m.- 8 p.m.; Sunday 10 a.m.- 5 p.m.
Only completed applications will be accepted with attached certificates and county license

PHOTOVOLTAIC (PV SOLAR) RESIDENTIAL SYSTEMS PERMIT APPLICATION CHECKLIST

It is suggested that all applicants applying for a permit read and understand the manufacturer's installation instructions prior to applying for a Building Permit

REQUIREMENT S TO APPLY FOR A PHOTOVOLTAIC (PV SOLAR) SYSTEM PERMIT

(1). A Builiding permit application submitted online along with the following:
(2). Owners phone number and email entered in the online permit application
(3). Evidence of Workers' Compensation Insurance (on a C-105 or equivalent)
(4). Evidence of Liability Insurance naming the Village of Hastings on Hudson as additionally insured
(5). A copy of the contractor's Westchester Co. Department of Consumer Affairs License
(6). An affidavit from a NYS licensed professional detailing and certifying that the existing structure meets or exceeds the minimum load requirements as per TABLE R301.2(1) for wind load before and after installation of the proposed equipment or the proposed upgrades to the existing structure to accomplish the aforesaidphone number and email entered in the online permit application

(7). Drawings (signed and sealed by a NYS licensed professional) of the roof plan showing the following criteria:
- All arrays of proposed PV panels on all roof surfaces
- Arrays maintaining a 18" setback from all ridges, hips and valleys or surface that abuts another adjacent roof
- Arrays maintaining a 24" setback from all single aisles such as gable ends

(8). Drawings or manufacturer's cut sheets of the array mounting hardware and interconnection diagram and specifications
(9). Drawings or manufacturer's cut sheets of the unit mount and roof penetration's flashing system
(10). 3 wire diagram showing all proposed equipment as governed by the National Electric Code (NEC)
(11). A diagram showing all proposed labels and labeling locations including; Solar AC Disconnect, Inverter Output Connection, Warning: Duel Power Source, Warning: PV combiner Panel, Solar PV Circuits Only, Solar Production Meter and Rapid Shutdown of solar system (see attached sample sheet) or manufacturer's cut sheets of the unit mount and roof penetration's flashing system
(12). A Fire Department AC disconnect, located outside the dwelling next to the utility meter and/or Notice of NEC equired Rapid Shutdown of PV systems on Buildings as per section 690.56(c) of the National Electric Code (NEC)wire diagram showing all proposed equipment as governed by the National Electric Code (NEC)
(13). Separate electrical permit application by a Westchester County Department of Licensing licensed Electrician, with all required insurances and the appropriate fee (must be filed by the licensed contractor)or manufacturer's cut sheets of the unit mount and roof penetration's flashing system
(14). Signed instruction/ checklist with submission and appropriate permit fees

Applicant Name: Douglas Hertz, President **Signature** _____ **Date** _____

By signing this form, you attest to reading the manufacturer's installation instructions and that all the information asked for above has been submitted and that the submitted information is correct.

Note: This list is given to assist in the application process. It is not intended to be a replacement for the Building or Zoning Code, County or State Regulations or Consolidated Edison Requirements, Unique and special projects may require additional information.

SITE OF SOLAR INSTALLATION

Cantor Residence

9 Ridge Street

Hasting-on-Hudson, NY 10706

INSTALLER

Sunrise Solar Solutions, LLC

510 North State Road

Briarcliff Manor, NY 10510

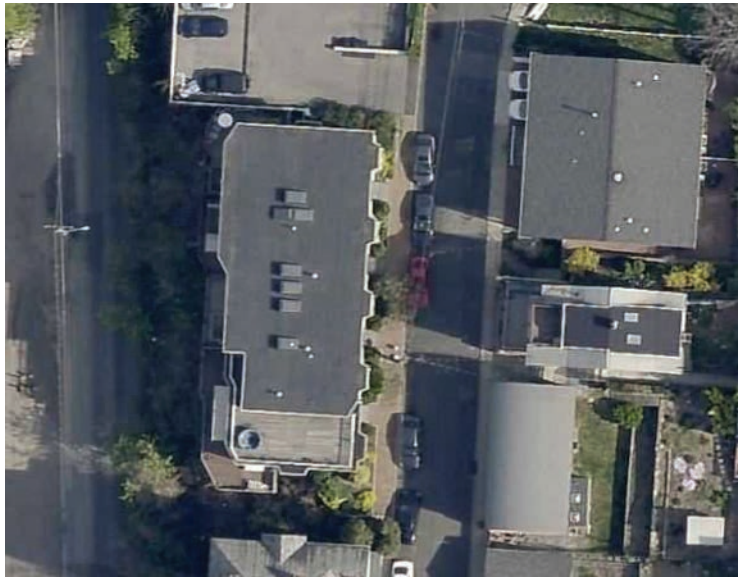

1 VIEW OF HOUSE FROM RIDGE STREET

2 NEIGHBORING HOUSE

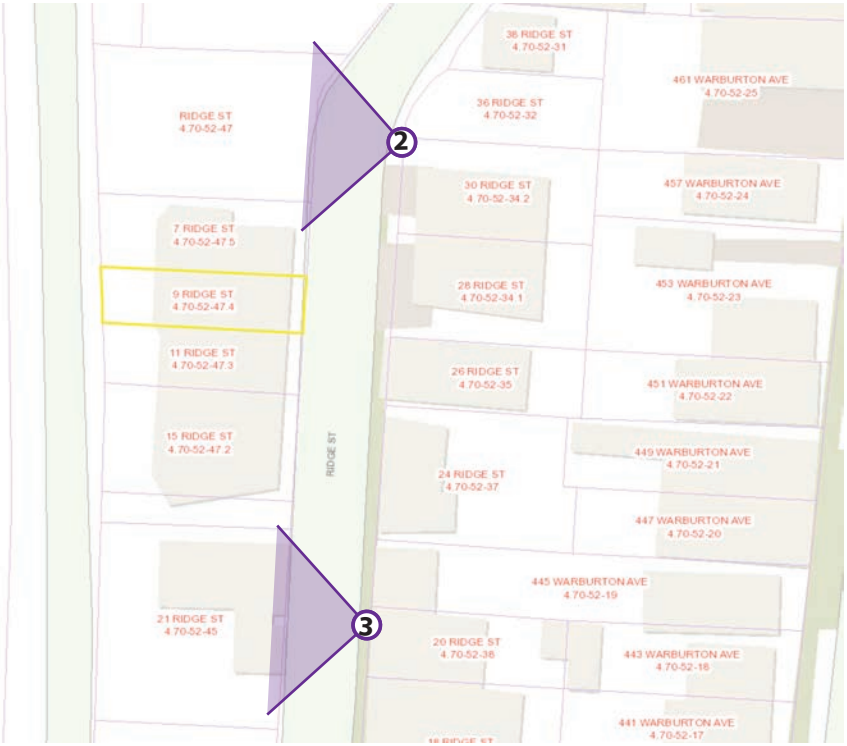

3 NEIGHBORING HOUSE

4 NEIGHBORING HOUSE

5 NEIGHBORING HOUSE

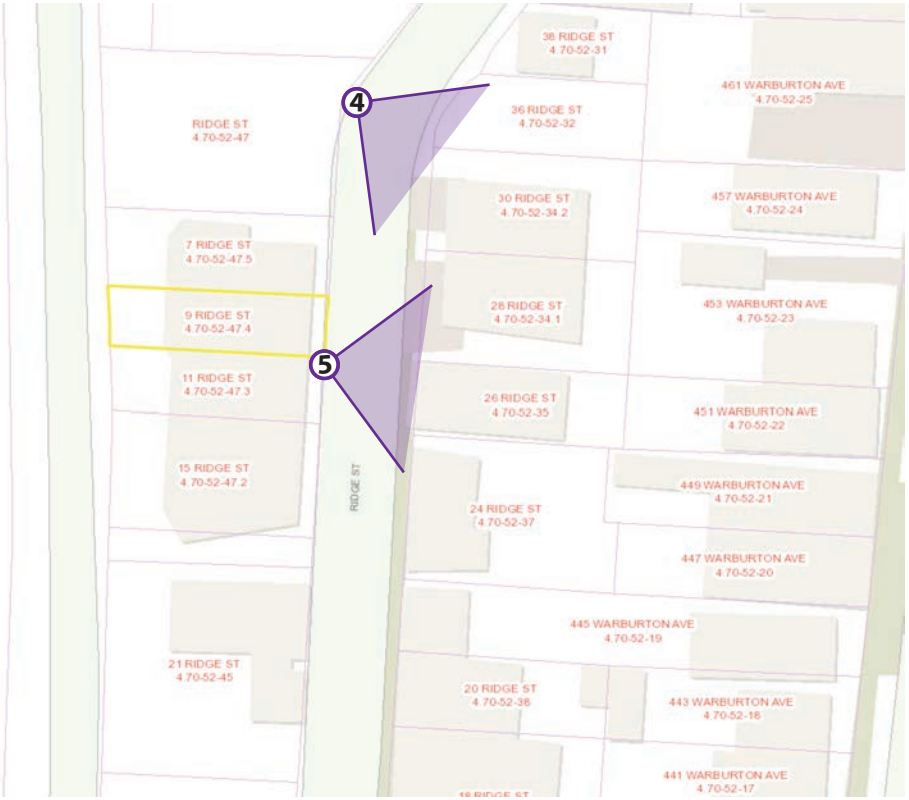

6 NEIGHBORING HOUSE

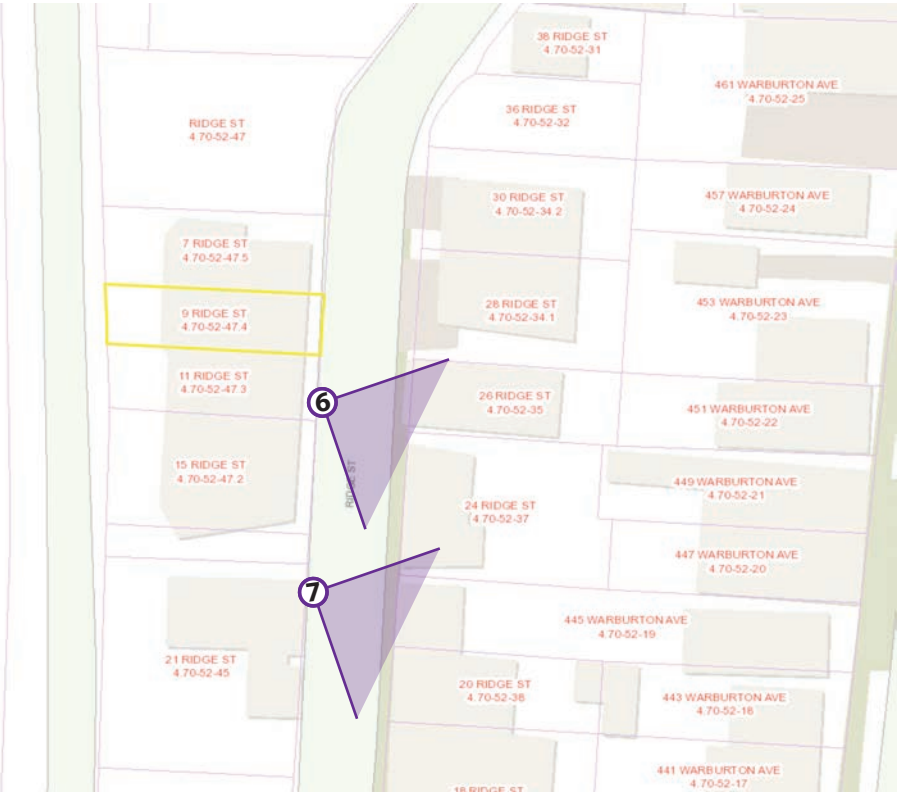

7 NEIGHBORING HOUSE

8 VIEW DOWN STREET

9 VIEW DOWN STREET

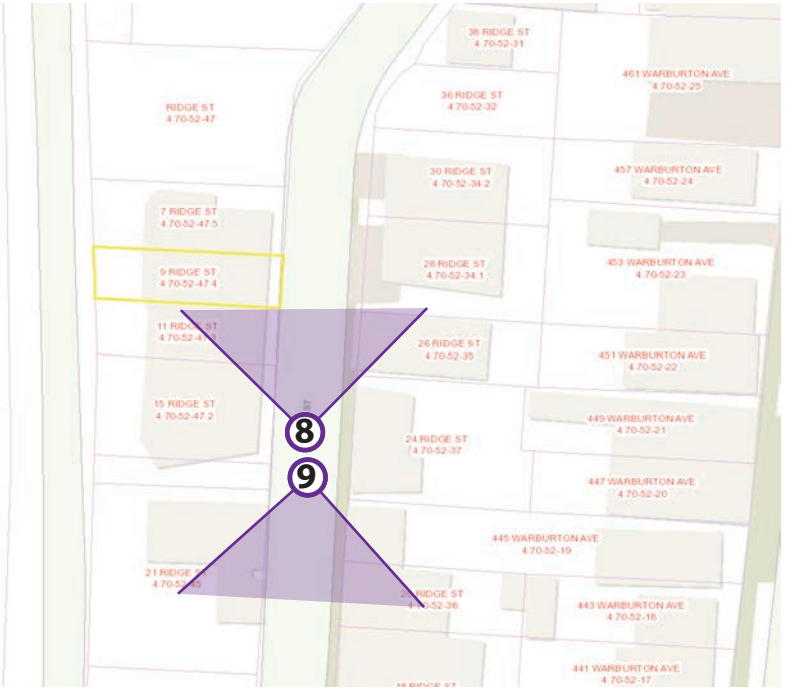

6 VIEW OF SOLAR PANEL RENDERING

INSTALLER

Sunrise Solar Solutions, LLC

510 North State Road

Briarcliff Manor, NY 10510

SITE OF SOLAR INSTALLATION

Cantor Residence

9 Ridge Street

Hasting-on-Hudson, NY 10706

NOTE: Solar array will not be functionally visible from street level.
This rendering depicts an aerial view.

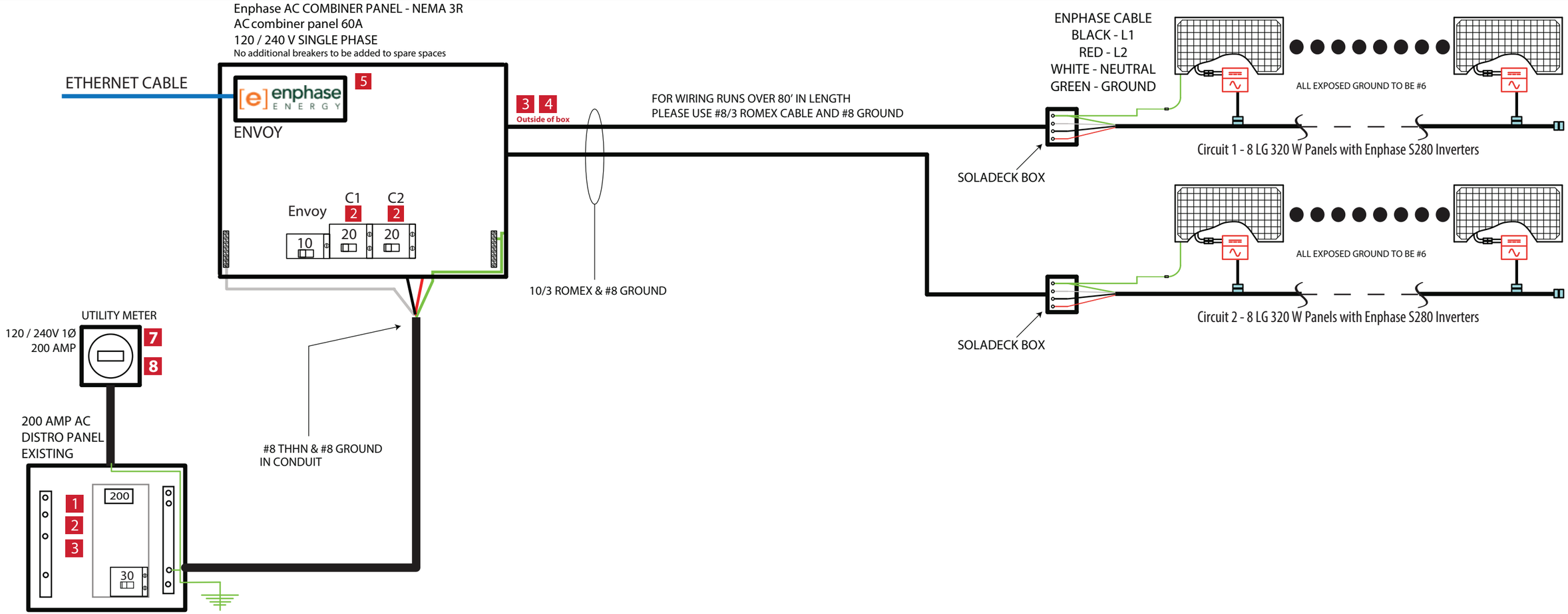

Notes:
Labels to comply w PSC requirements & NEC
All wiring to comply w NEC Code Article 230
Ground to be continuous
Ground wire connection to be "irreversible"
Meter pan to be grounded only
Neutral to pass through Meter Pan
No Line Side Tap connection in
Utility Meter Pan

Consumption monitoring current transformers to be installed on the main service lines and connected to the solar envoy monitoring system

PLEASE REFER TO PAGE E-2 FOR LABELING KEY

Sunrise Solar Solutions, LLC
510 North State Road
Briarcliff Manor, NY 10510
(914) 762-7622

Elec 3 Wire Diagram

Cantor Residence
9 Ridge Street
Hasting-on-Hudson, NY 10706
Sect. 4.70 Block 52 Lot 47.4
Ph: 917 312 3877

DATE	VER.	DRAWN BY	CHECKED BY
04/28/2016	V1	BP	DH

Circuit Calculations:

Max 14 Inverters per circuit, 20 AMP OCPD/ Circuit
14 x 270 Watt Inverters. Max Output = 3,780
3,780 W / 240 V = 15.75 Amps x 1.25 = 19.69
Use 20 AMP OCPD

Total 16 x 270 Watt Inverters. Max Output = 4,320 W AC
4,320 W / 240 V = 18Amps x 1.25 = 22.5
Use 30 Amp OCPD

E-1

SYSTEM SPECS:
Nominal AC Voltage: 240 V
Max Current: 18 A

Project	ITEM NO.	PART NUMBER	DESCRIPTION	WEIGHT BY UNIT	WEIGHT (LBS)	WEIGHT (KG)	QTY.	Material
Bolt&Nuts	1	LN1-AL	Lock Nut; 0.5"x 0.5"	0.03	3.33	1.5	111	6061-T6 (SS)
Bolt&Nuts	2	BL-SS-3/8-16-0.75IN	SS Hex Bolt; 3/8"-16 x 3/4" with Loctite	0.04	2.88	1.3	72	AISI 304
Bolt&Nuts	3	BL-SS-3/8-16-1IN	SS Hex Bolt; 3/8-16 x 1" with Loctite	0.05	3.25	1.5	65	AISI 304
Bolt&Nuts	4	KN-SS-3/8-16	SS Keps Nut; 3/8-16	0.022	1.144	0.5	52	AISI 304
Bolt&Nuts	5	SDS-SS-12-1IN	Self Drilling Screw #12-1"	0.018	1.404	0.6	78	AISI 410 Stainless Steel
Bolt&Nuts	6	SDS-SS-14-1.25IN	Self Drilling Screw #14x1.25in	0.021	0.336	0.2	16	AISI 410 Stainless Steel
Bolt&Nuts	7	BL-SS-3/8-16-1.25IN	SS Hex Bolt; 3/8"x1-1/4" with Loctite	0.0608	0.7904	0.4	13	AISI 304
Bolt&Nuts	8	FW-SS-3/8	Flat Washer 3/8"	0.015	0.39	0.2	26	AISI 304
Burndy	9	WEEB-BDN-JMP-6.7	WEEB Bonding Jumper Type 6.7	0.15	0.15	0.1	1	
Components-SRL	10	SRL-ZC40-ER	SRL Z-Clamp; 40mm, End Row	0.16	3.2	1.5	20	6005-T5
Components-SRL	11	SRL-RL5	SunRail Linker; Type S	0.72	2.88	1.3	4	6005A-T61
Components-SRL	12	SRL-AC6-3/8H	Aluminum Angle 2"x6"x 3/8"	1.07	27.82	12.6	26	6005-T5
Components-SRS	13	SR-C-SRS-10D	SR to SRS Clamp; 10.00"	1.00	26	11.8	26	6005-T5
Other Hardware	14	SR-RP1	SR Rubber Pad; 4"X48"	4.18	54.34	24.7	13	Recycled Rubber
Other Manufacturer	15	U-Cliclac	Integrated Bonding U-Cliclac	.18	3.96	1.8	22	6063-T5
Other Manufacturer	16	Power Grip Plus	Power Grip Plus		0	0.0	13	
PV-Panel	17	PV-Panel-60M	PV Panel 60Cells	40.8	652.8	296.7	16	STD
SR	18	SR-CC	Aluminum Angle 2"x3"-1/4"	0.46	11.96	5.4	26	6061-T6 (SS)
SR-Rails	19	SR2-15.25IN	SunRail2 Beam; Length 15.25 Inches STD	1.69	21.97	10.0	13	6005-T5
SR	20	SR-SC	SunRail Structure Side Clamp	0.23	5.98	2.7	26	6005A-T61
SR-Rails	21	SR2-10.375IN	SunRail2 Post; Length 10-3/8 Inches	1.15	14.95	6.8	13	6005-T5
SR-Rails	22	SR2-258IN	SunRail2 Beam; Length 258 Inches	28.55	85.65	38.9	3	6005-T5
SR-Rails	23	SR2-86IN	SunRail2 Beam; Length 86 Inches	9.52	19.04	8.7	2	6005-T5
SR-Rails	24	SR2-172IN	SunRail2 Beam; Length 172 Inches	19.03	19.03	8.7	1	6005-T5
SRS3-Rail	25	SRS3-204IN	SRS-2.5x3.5; length 204in STD	26.27	52.54	23.9	2	6005-T5
SRS3-Rail	26	SRS3-120IN	SRS-2.5x3.5; length 120in	15.46	30.92	14.1	2	6005-T5
SRS3-Rail	27	SRS3-84IN	SRS-2.5x3.5; length 84in	10.82	86.56	39.3	8	6005-T5
TOTAL WEIGHT (WITHOUT BALLAST)					1133.2744	515.2		

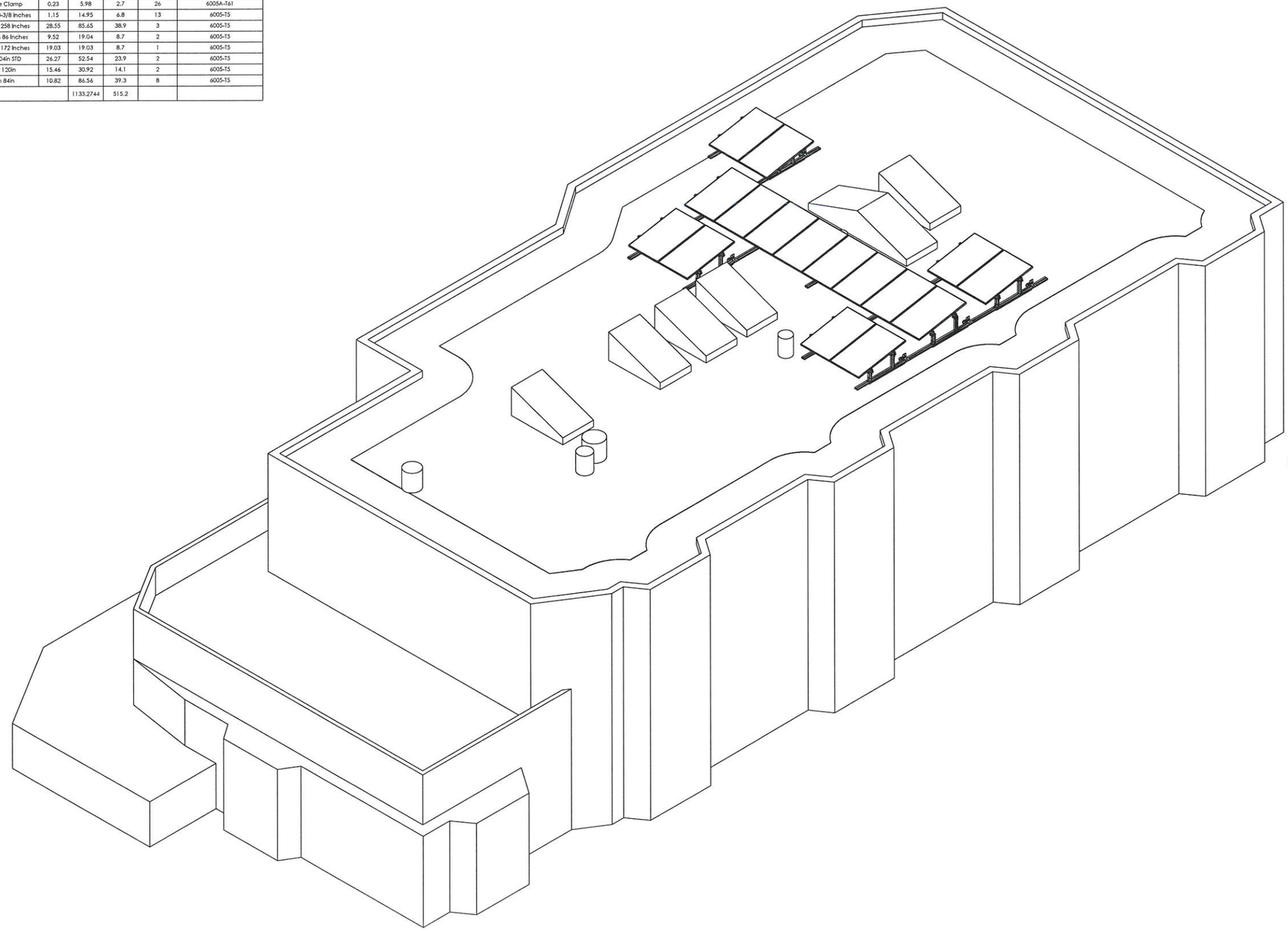

opsun systems inc
Project Manager : Frederic Martineau
Phone : 1 (416)-600-1414
E-mail : projects@opsun.com
www.opsun.com

1901 Fallows Street
Whitby, Ontario L1N 9A7
Canada

Notice

All rights reserved. All information contained in this document is confidential and proprietary to Opsun Systems Inc. Such information may not be copied, photographed in any way, altered, or disclosed to third parties without prior written permission of Opsun Systems Inc, or any other use of such information not in the ordinary course of its duty, being information subsisting between parties to be maintained in confidence. Opsun Systems Inc. shall not be responsible for the integrity of the building, the integrity of which has been affected by the installation of the PV system. Installation of the structure shall be in the approved and standard fashion, specific sign holes will ultimately be selected by others. Opsun Systems Inc. shall not be responsible for any damage to the roof as a result of walking on Opsun Inc.'s system. Opsun Systems Inc. shall not be responsible for any damage to the roof. Opsun Inc. shall not be responsible for the longevity and maintenance of the roof. Opsun Systems Inc. shall not be responsible for any damage, injury, and/or expense of the roof to support the installation. Opsun Systems Inc. shall not be responsible for any damage to the structure and the dimensions and specifications, and is not in agreement with the above statement.

Note

6/14/17

STATE OF NEW YORK
MOHAMED THABET AL HARASH
094048
LICENSED PROFESSIONAL ENGINEER

#	Review/Issue	Date

Array Information

Type of mounting : Semi-rail Structure

Modules : 60 Cells /270W

Tilt Angle(°) : 10°

Qty Panels: panels

Azimut (°): 0°

Array Size (kW): 12.7kW DC

Client Info

Sunrise Solar SOLUTIONS

SunRise Solar Solution LLC
510 North State Road
Briarcliff Manor, NY, USA

Contact : Doug Hertz
Phone : 914.762.7622
doug@sunrisesolarllc.com

Title

BILL OF MATERIAL

Project Info

Ridge St.

Contact: Doug Hertz
Phone : 914.762.7622
doug@sunrisesolarllc.com

Date
14/02/2017

Project ID
RSE-161116-1

Draft : FM
Check : FGG

Scale : 1:50
Page NO. PV01-1/14

1111C:\WORKING\

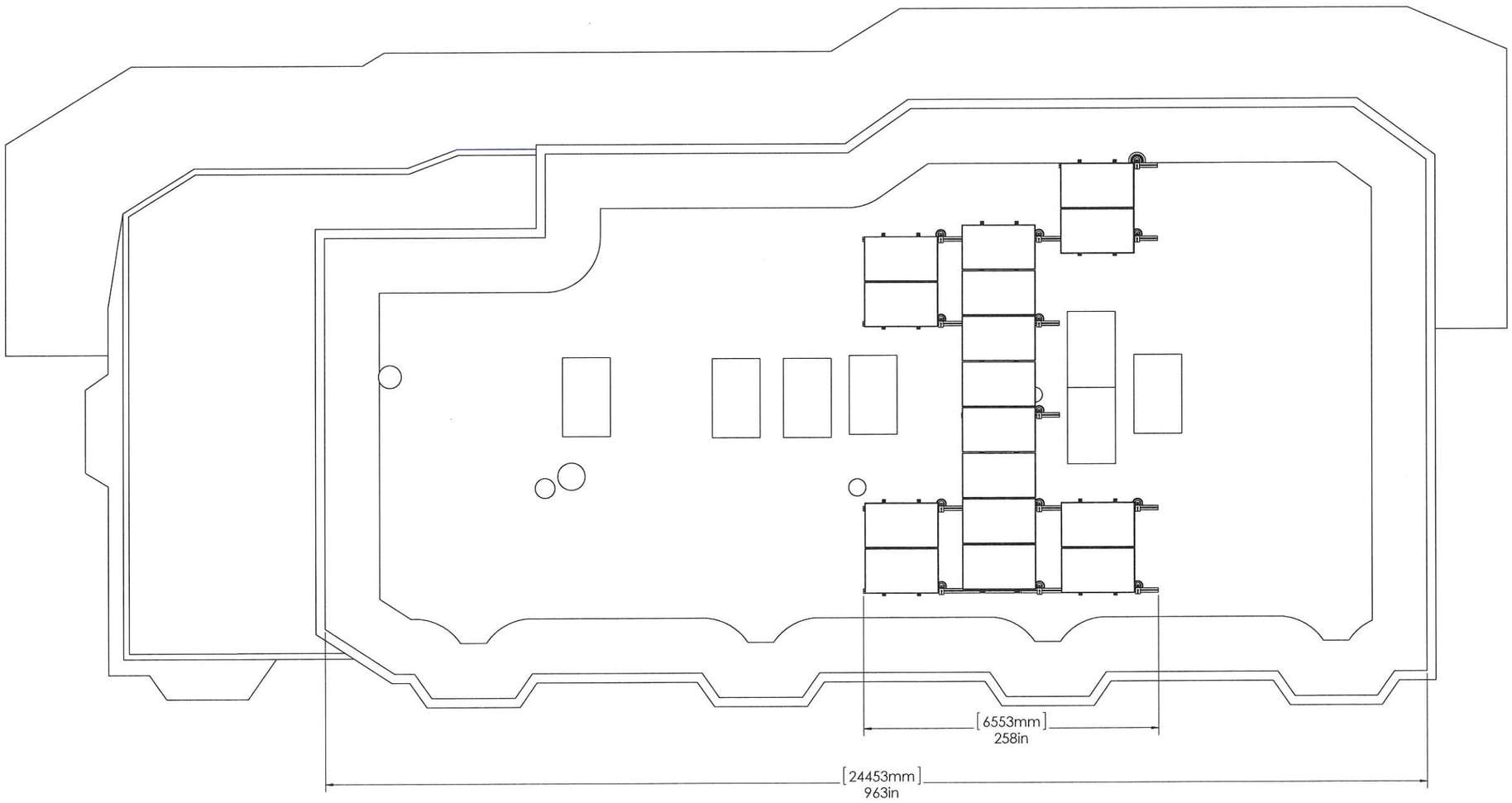

opsun systems inc
Project Manager : Frederic Martinovi
Phone : 1 (416)400-1614
E-mail : projects@opsun.com
www.opsun.com

1901 Forbes Street
Whitby, Ontario L1N 9A7
Canada

Notice

All rights reserved. All information contained in this document is the property of Opsun Systems Inc. and may not be copied, distributed in any way, including by any means, electronic or mechanical, nor modified, or other than for a given written permission from Opsun. Further and/or additional permissions may be granted by Opsun. Nothing is made to the present information, in fully or partially, information, specifications, or any other information, including the structural integrity of the building, the weights of which the sales and/or installation of Opsun Systems Inc. products, or any other form made to the approved design by our sealing specific plan herein will fulfill site conditions offered to Opsun Systems Inc. by the customer. Opsun Systems Inc. will not be responsible for anything by Opsun. No warranty is provided or implied by Opsun Systems Inc. Opsun Systems Inc. is not responsible for the longevity and/or existence of the roof structure, roofing material, roof membrane, roof deck, roofing units and/or attached to support the installation of such racking. Demonstrate the roofing, by engineering the roof structure, roofing material, roof deck, to supplement with the above statement.

Note

6/14/17

STATE OF NEW YORK
MOHAMED THABET ALHARASH
094048
LICENSED PROFESSIONAL ENGINEER

#	Review/Issue	Date

Array Information

Type of mounting : Semi-Ballast Structure

Modules : 60 Cells /270W

Tilt Angle(°) : 10°

Qty Panels: panels

Azimut (°): 0°

Array Size (kW): 12.7kW DC

Client Info

Sunrise Solar SOLUTIONS

SunRise Solar Solutions LLC
510 North State Road
Briarcliff Manor, NY, USA
Contact : Doug Hertz
Phone : 914 762 7622
doug@sunrisesolarllc.com

Title

TOP ELEVATION

Project Info

Ridge St.

Contact: Doug Hertz
Phone : 914.762.7622
doug@sunrisesolarllc.com

Date
14/02/2017

Project ID
RSE-161116-1

Draft :	Check :
FM	FGG
Scale : 1:50	Page NO. PV01-2/14

\\\\C:\WORKING\

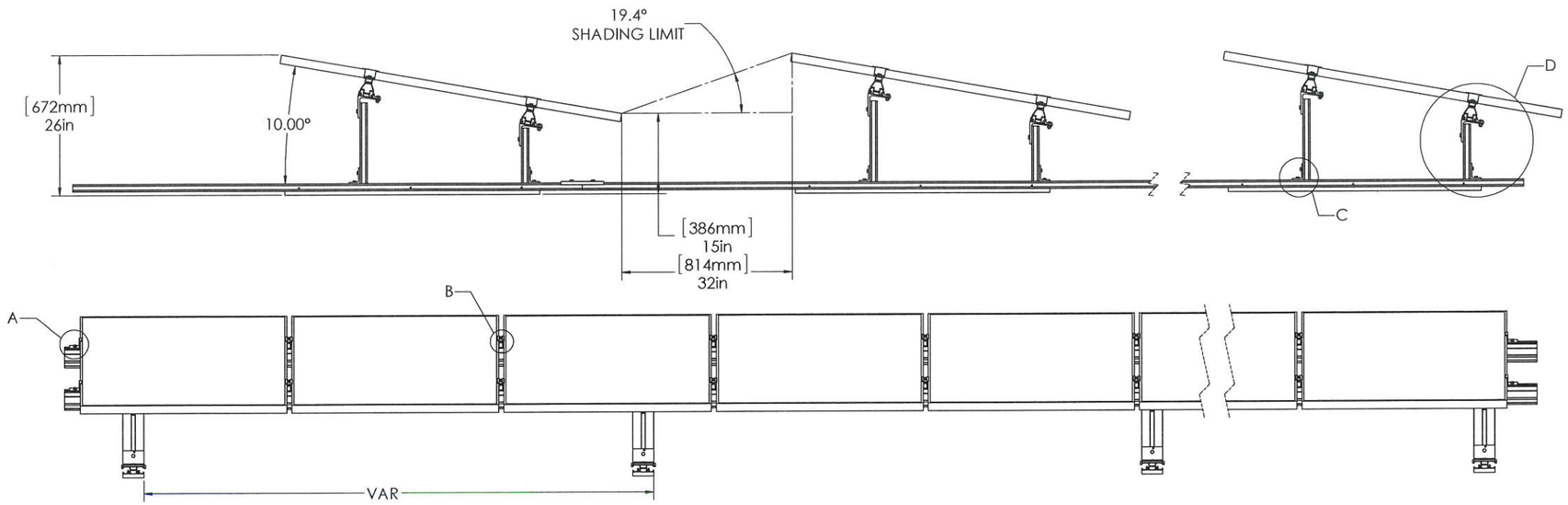

PV Panel Dimension

Model : 60 cells

Panel Area : 17.6ft² (1.63 m²)

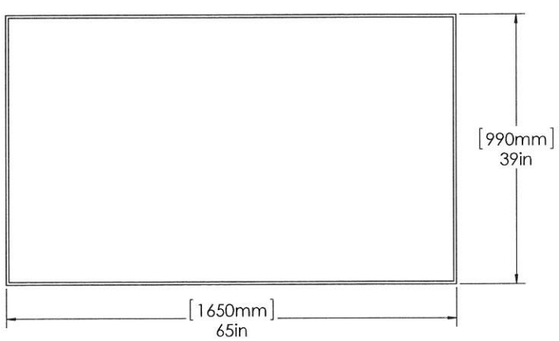

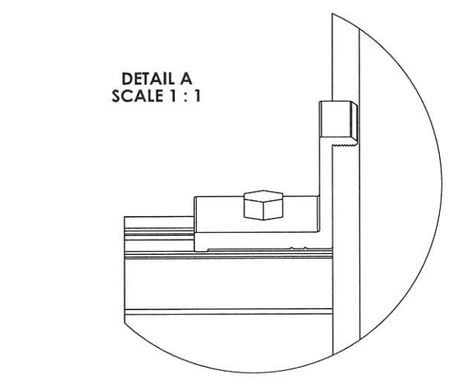

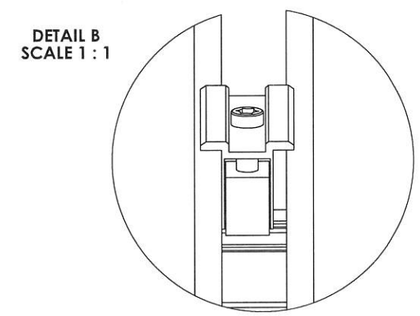

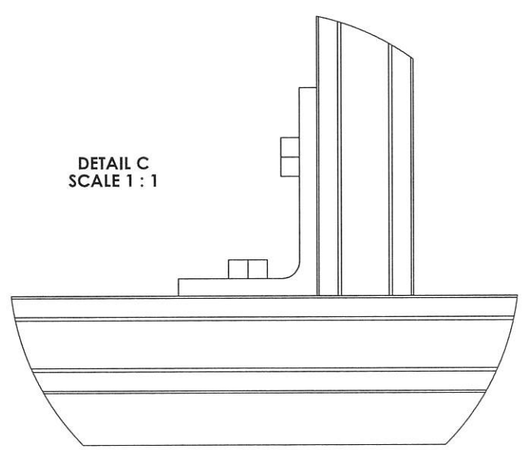

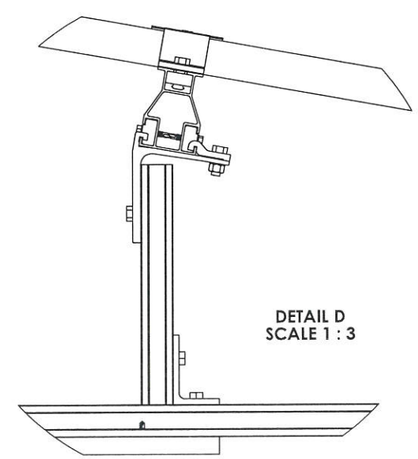

NOTES:

DESIGN COMPLY TO NBCC 2010 & CSA 157-05

ALL FIXTURES ARE MADE OF ALUMINUM (6005-T5 OR 6061-T6 ALLOY)

BOLTS AND NUTS ARE MADE OF STAINLESS STEEL (ASTM 304)

ALL BOLTS (BL-SS-3/8-XX) MUST BE TORQUED AT 20 LB-FT

ALL BOLT AND NUTS ∅1/2" BUST BE TORQUED AT 43 LB-FT

ALL TORX SCREW MUST BE TORQUED AT 8-10 N-M (6-7 LBS-FT)USING A TORX T40 TOOL

opsun systems inc.
Project Manager : Frederic Martinreau
Phone : 1 (416)-600-1614
E-mail : projects@opsun.com
www.opsun.com

1901 Forbes Street
Whitby, Ontario L1N 9A7
Canada

Notice

All rights reserved. All information contained in this document is the property of OpSun Systems Inc. and may not be copied, photographed in whole or in part, including by any means, electronic or mechanical, nor shall it be used for any purpose without permission from OpSun. Neither OpSun Systems Inc. nor any person acting on OpSun's behalf is made to the general information, or any drawing, information, specification, or other data, or any part thereof, or any structure, machine, process, equipment, or material, or any combination thereof, disclosed in this publication, the accuracy of which has not been verified by OpSun Systems Inc. OpSun Systems Inc. assumes no liability to the purchaser and/or third party using specific information which are wrongly referred to OpSun Systems Inc. OpSun Systems Inc. makes no warranty, express or implied, in writing to OpSun, the purchaser is provided or otherwise, regarding the information, and OpSun is not responsible for the longevity or performance of the item described in the document, or for any damages arising from having used suitability of the item in question the intended short-term or long-term use. Do not scale the drawing. By accepting the drawing, you agree to return it to OpSun upon request and to the above statement.

Note

6/04/17

STATE OF NEW YORK
MOHAMED THABET AL HARASH
094048
LICENSED PROFESSIONAL ENGINEER

#	Review/Issue	Date

Array Information

Type of mounting : SunRail Structure

Modules : 60 Cells /270W

Tilt Angle(°) : 10°

Qty Panels: panels

Azimut (°): 0°

Array Size (kW): 12.7kW DC

Client Info

Sunrise Solar SOLUTIONS

SunRise Solar Solution LLC
510 North State Road
Briarcliff Manor, NY, USA
Contact : Doug Hertz
Phone : 914.762.7622
doug@sunrisesolarllc.com

Title

SYSTEM DETAILS

Project Info

Ridge St.

Contact: Doug Hertz
Phone : 914.762.7622
doug@sunrisesolarllc.com

Date 14/02/2017

Project ID RSE-161116-1

Draft : FM | Check : FGG

Scale : 1:12 | Page NO. PV01-3/14

1111C:\WORKING\

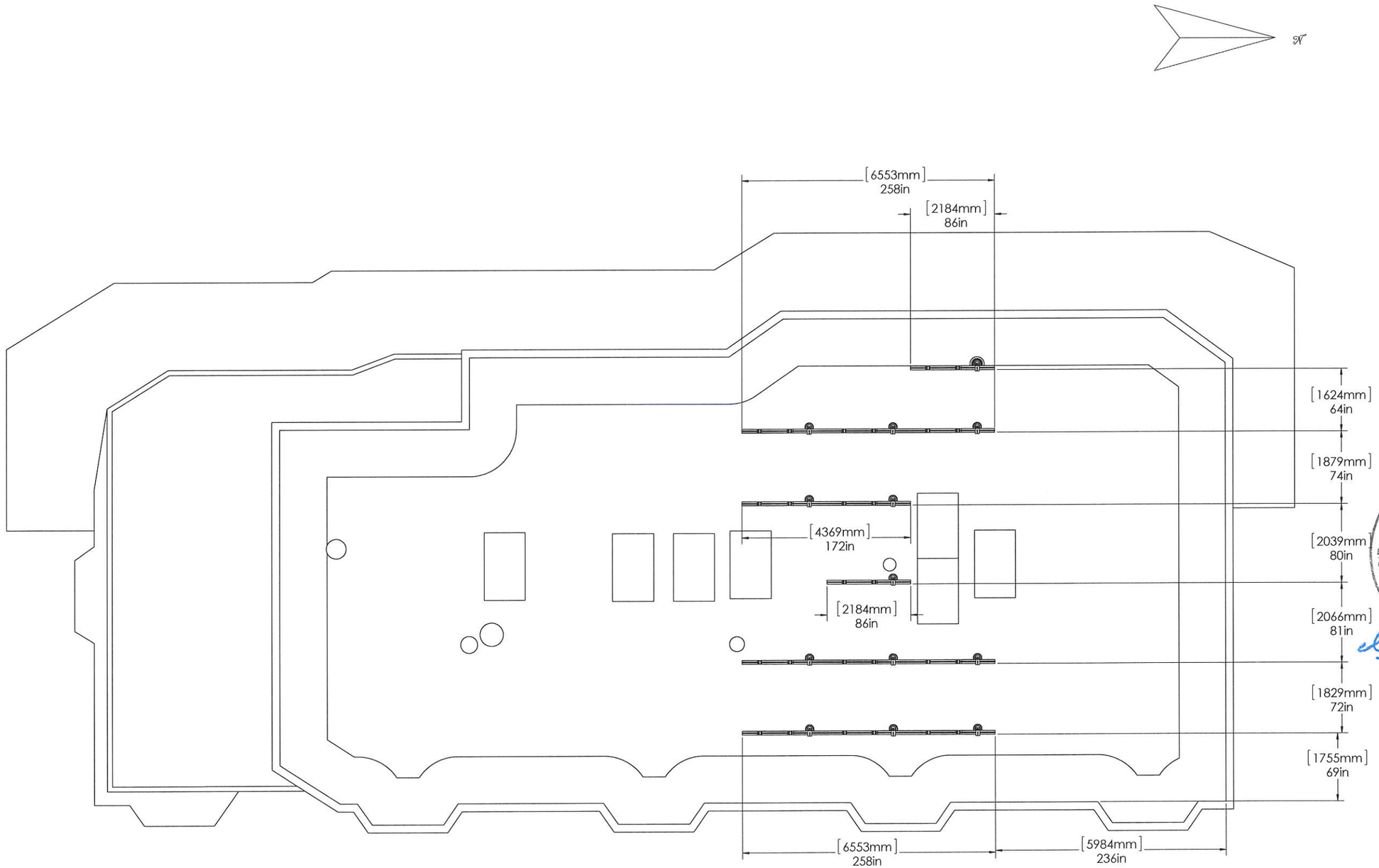

opsun systems inc

Project Manager : Frederic Martinez
Phone : 1 (416)600-1314
Email : projects@opsun.com
www.opsun.com

1901 Farbers Street
Whitby, Ontario L1N 9A7
Canada

Notice

All rights reserved. All information contained in this document is confidential and is the property of Opsun Systems Inc. No part of it may be copied, photographed or in any, including by any electronic means, disclosed to any third party without the express written permission from Opsun. Similar and/or identical designs, plans, specifications, or other data or information to the present information, or data or heavy information, may be used by Opsun for any purpose including, but not limited to, structural integrity of the building, the integrity of which the sales and/or installation of which is not under the control of Opsun. Dimensions made by the designer and design firm or another specific organization and/or any warranty offered by Opsun are based on information provided by others. Opsun is not responsible or liable for any defects in the structure or any part thereof, nor is Opsun responsible for the longevity or maintenance of the roof structure or any part thereof, including, but not limited to, flashing, and complete all the roof to support the installation of such roofing. Contractor must verify, by conducting the structural integrity of the roof, that it is in agreement with the above statement.

Note

#	Review/Issue	Date

Array Information

Type of mounting : Sunlaid Structure

Modules : 60 Cells /270W

Tilt Angle(°) : 10°

Qty Panels: panels

Azimut (°): 0°

Array Size (kW): 12.75W DC

Client Info

Sunrise Solar Solutions

SunRise Solar Solution LLC
510 North State Road
Briarcliff Manor, NY, USA

Contact : Doug Hertz
Phone : 914.762.7622
doug@sunrisesolarllc.com

Title

GROUND RAIL

Project Info

Ridge St.

Contact: Doug Hertz
Phone : 914.762.7622
doug@sunrisesolarllc.com

Date
14/02/2017

Project ID
RSE-161116-1

Draft :	Check :
FM	FGG

Scale :	Page NO.
1:50	PV01-4/14

6/04/17

STATE OF NEW YORK
MOHAMED THABET ALHARASH
094048
LICENSED PROFESSIONAL ENGINEER

\\\\C:\WORKING\

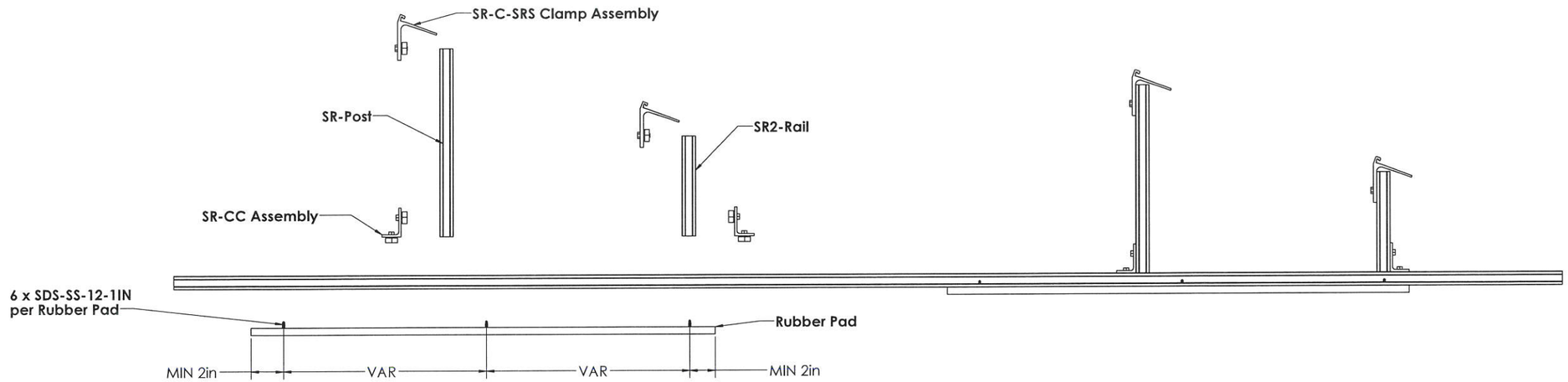

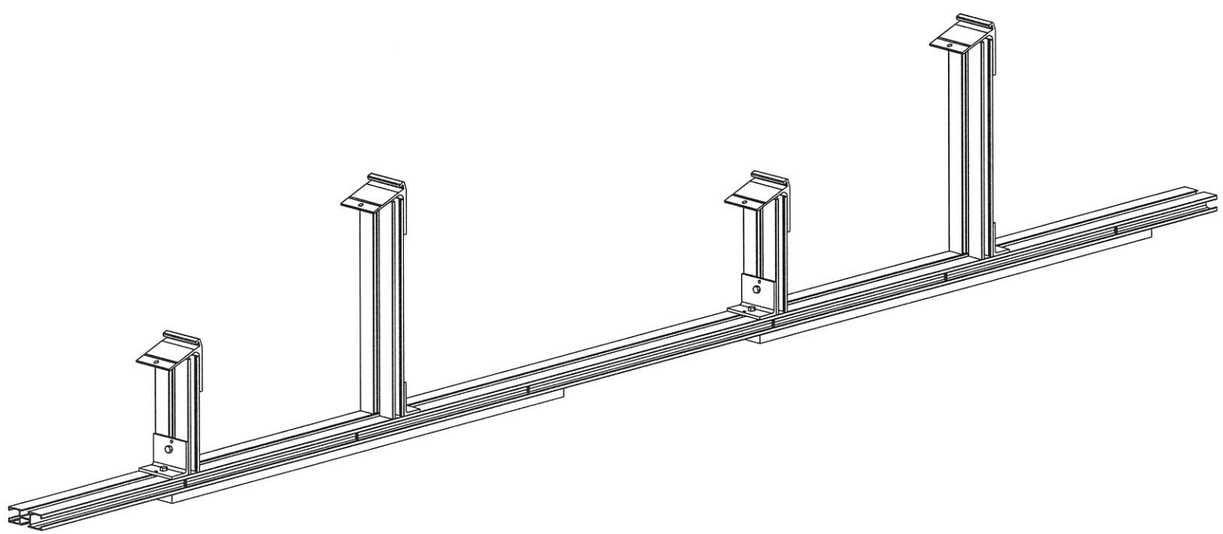

GROUND BEAM ASSEMBLY INSTRUCTIONS

1. Hammer-in six (6) self-drilling screws (SDS-SS-12-1IN) into the rubber pad (SR-RP1) using the given patern. Make sure to hammer the screws in the groves of the pad. This will ensure that the screw head will not be in contact with the roof once screwed in.

2. Position the rubber pad on the SRS-Rail. Screw in place.

3. Mount up the front clamp assembly, SR-CC, then post, then SR-C-SRS.

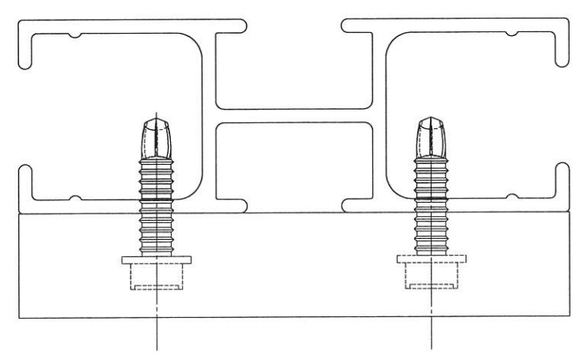

SCALE 2:1

opsun systems inc
Project Manager : Frederic Martineau
Phone : 1 (416)800-1614
E-mail : projects@opsun.com
www.opsun.com

1901 Fairbes Street
Whitby, Ontario L1N 7A7
Canada

Notice
All rights reserved. No reproduction or transmission in any form or by any means, electronic or mechanical, including photocopying, recording or any information storage and retrieval system, without permission in writing from Opsun. The information contained in this document is intended for the use of Opsun clients and others authorized by Opsun. Unauthorized use of this document or any of its contents is prohibited. Opsun shall not be responsible for any modifications or additions to the document made by others. Any and all proposed changes must first be reviewed and approved by Opsun. Opsun shall not be responsible for any work not in accordance with Opsun's drawings and specifications or for any work for which Opsun shall not have been responsible for. The temporary or permanent stability of the roof structure, including but not limited to the adequacy of the roof framing, and supports which are to support the installation, shall be the responsibility of the roof structure owner. By accepting this document, the client understands and AGREE to the statement with the above Notices.

Note

6/12/17

STATE OF NEW YORK
MOHAMED THABET AL HARASH
094048
LICENSED PROFESSIONAL ENGINEER

#	Review/Issue	Date

Array Information

Type of mounting : Sunfoil Structure

Modules : 60 Cells /270W

Tilt Angle(°) : 10°

Qty Panels: panels

Azimut (°) : 0°

Array Size (kW): 12.7kW DC

Client Info

Sunrise Solar SOLUTIONS

SunRise Solar Solution LLC
510 North State Road
Briarcliff Manor, NY, USA
Contact : Doug Hertz
Phone : 914.762.7622
doug@sunrisesolarllc.com

Title

GROUND RAIL PREASSEMBLY-1

Project Info

Ridge St.

Contact: Doug Hertz
Phone : 914.762.7622
doug@sunrisesolarllc.com

Date 14/02/2017

Project ID RSE-161116-1

Draft : FM | Check : FGG

Scale : 1:10 | Page NO. PV01-5/14

111C:\WORKING\

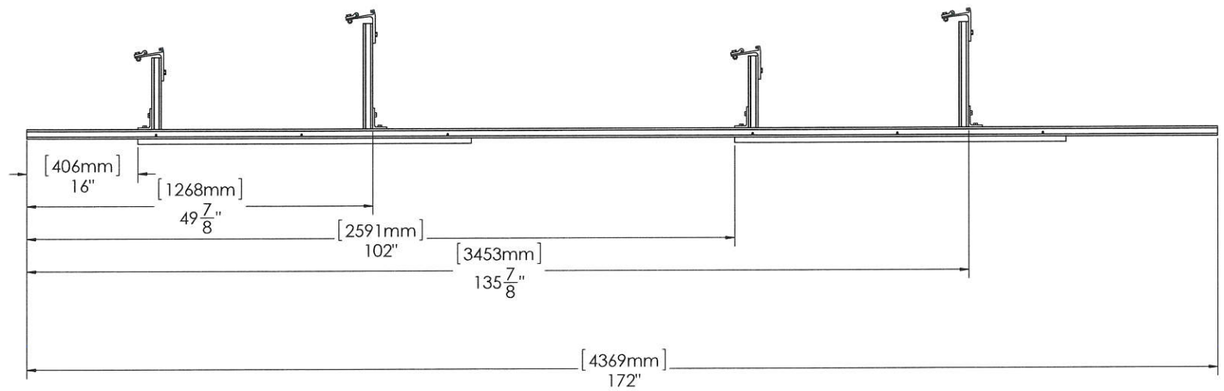

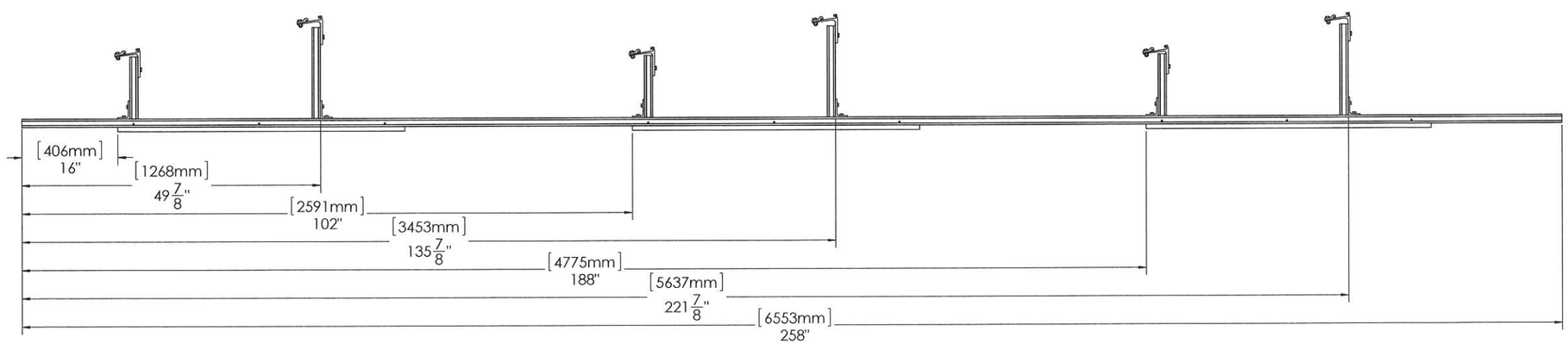

opsun systems inc

Project Manager : Frederic Martinez
Phone : 1 (416)-600-1414
E-mail : projects@opsun.com
www.opsun.com

1901 Fallowfield Street
Whitby, Ontario L1N 9A7
Canada

Notice

All rights reserved. Information contained in this document is proprietary to OPSUN Systems Inc. and may not be copied, photographed or in any, including by other means, presented to any other party without the express written permission from Opsun. Another and/or additional purpose for which it is not to be used is not to be disclosed, in whole or in part, to any other person or organization, or to any heavy infrastructure, including but not limited to, any other part of the building, the structural integrity of the building, the integrity of which has been affected by the work to which this document relates, or otherwise made to any approved design(s) or service, specific approvals and/or any warranty offered by Opsun in respect of the work to which this document relates. Nothing in this document is intended to be a warranty or guarantee. Opsun is not responsible for the integrity and/or existence of the roof, structure, or any other part of the building, including, and/or parts of the roof to support the installation described in this document. By accepting this document, the client understands and is in agreement with the above notice.

Note

#	Review/Issue	Date

Array Information

Type of mounting : Sunlight Structure

Modules : 60 Cells /270W

Tilt Angle(°) : 10°

Qty Panels : panels

Azimut (°) : 0°

Array Size (kW): 12.7kW DC

Client Info

Sunrise Solar Solutions

SunRise Solar Solution LLC
510 North State Road
Briarcliff Manor, NY, USA
Contact : Doug Hertz
Phone : 914.762.7622
doug@sunrisesolarllc.com

Title

GROUND RAIL PREASSEMBLY-2

Project Info

Ridge St.

Contact: Doug Hertz
Phone : 914.762.7622
doug@sunrisesolarllc.com

Date 14/02/2017

Project ID RSE-161116-1

Draft : FM | Check : FGG

Scale : 1:10 | Page NO. PV01-6/14

STATE OF NEW YORK
MOHAMED THABET AL HARASH
094048
LICENSED PROFESSIONAL ENGINEER

6/14/17

\\11\C:\WORKING\

COMPONENTS PREASSEMBLY

SR-CC Assembly

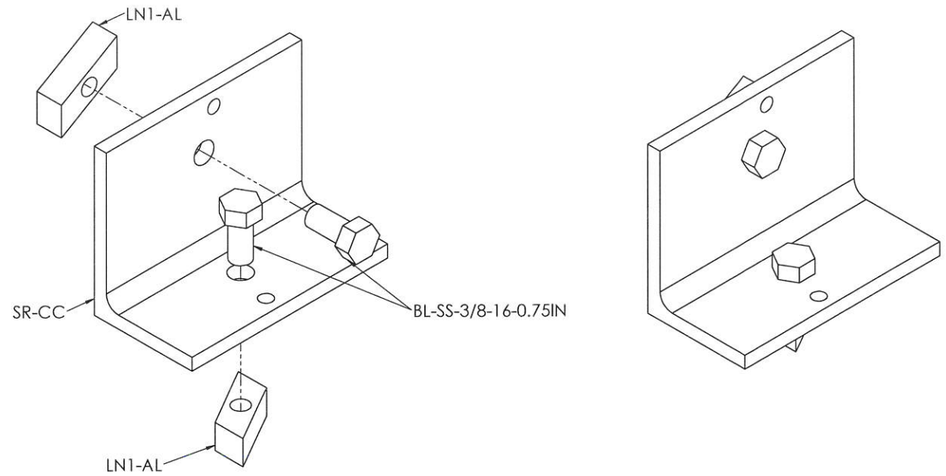

SRU Assembly

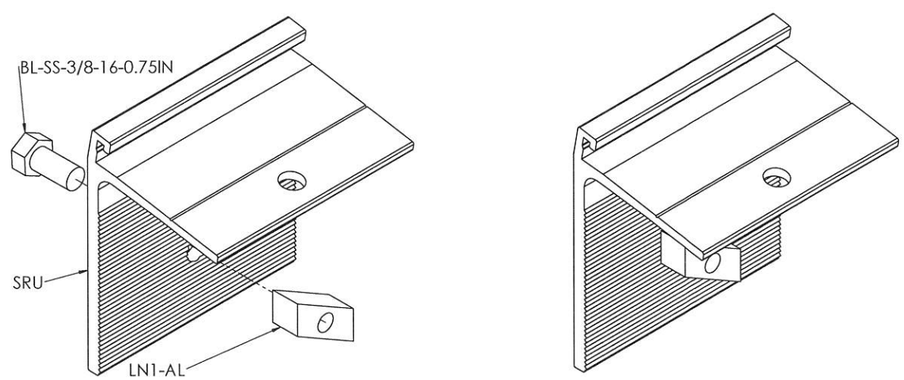

NOTES : FOR EACH LOCK NUTS (LNS-SS), ONLY BOLT IN 2-3 THREADS .

FOR ALL KEPS NUTS, HAND TIGHTEN THE NUT.

opsun systems inc

Project Manager : Frederic Martineau
Phone : 1 (416)800-1414
E-mail : projects@opsun.com
www.opsun.com

1901 Forbes Street
Whitby, Ontario L1N 7A7
Canada

Notice

All rights reserved. All information contained in this document remains the sole property of Opsun. This document may not be reproduced, disclosed, or used in whole or in part without express written permission from Opsun. Further and/or additional permission from Opsun may be required for access to the proprietary information and/or heavy information contained in this document. Opsun shall not be responsible for the structural integrity of the building, the integrity of which has been altered by the installation of the equipment described in this document or any in the approved design layout and/or specifications. Any alterations to the approved design layout and/or specifications and all proposed changes to which are to be reviewed and approved by Opsun prior to the commencement of work on the project by Opsun. Opsun will require to and Opsun shall not be responsible for the dangerous underassistance of the work performed by others, including but not limited to, the installation, wiring, and subsequent work to adjust the installations and equipment described in this document, or any other work covering the document, that deem unacceptable, and A.H.J.'s explanation sent. The above statement.

Note

6/14/17

STATE OF NEW YORK
MOHAMED THABET AL HARASH
094048
LICENSED PROFESSIONAL ENGINEER

#	Review/Issue	Date

Array Information

Type of mounting : Sunfast Structure

Modules : 60 Cells /270W

Tilt Angle(°) : 10°

Qty Panels: panels

Azimut (°) : 0°

Array Size (kW): 12.7kW DC

Client Info

Sunrise Solar SOLUTIONS

SunRise Solar Solution LLC
510 North State Road
Briarcliff Manor, NY, USA

Contact : Doug Hertz
Phone : 914.762.7622
doug@sunrisesolarllc.com

Title

PREASSMBLIES

Project Info

Ridge St.

Contact: Doug Hertz
Phone : 914.762.7622
doug@sunrisesolarllc.com

Date 14/02/2017

Project ID RSE-161116-1

Draft : FM | Check : FGG

Scale : 1:1 | Page NO. PV01-7/14

1111C:\WORKING\

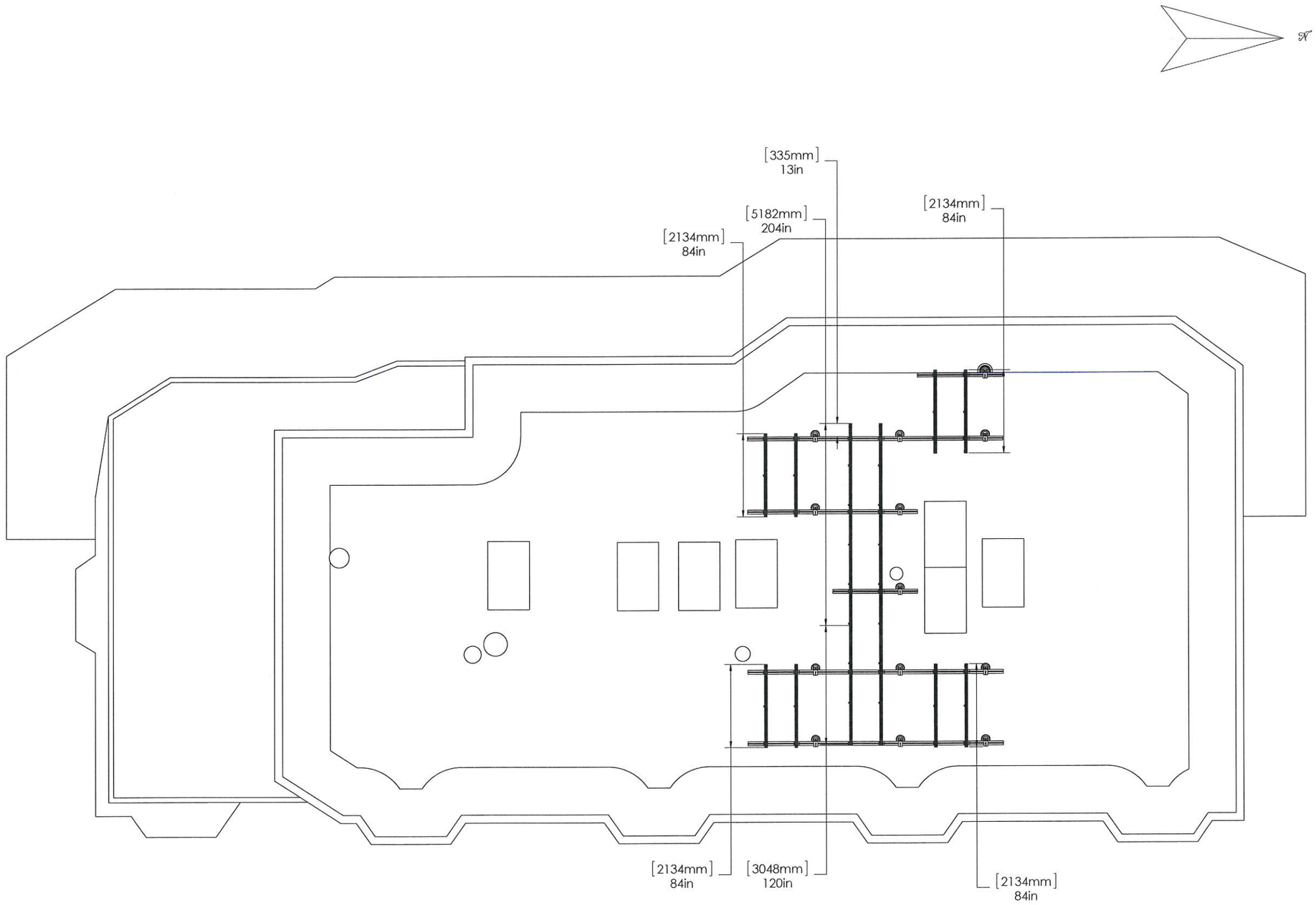

opsun systems inc
Project Manager : Frederic Martineau
Phone : 1 (416)-800-1414
E-mail : projects@opsun.com
www.opsun.com

1901 Forbes Street
Whitby, Ontario L1N 9A7
Canada

Notice
All rights reserved. All information contained in this document is the property of Opsun Systems Inc. and may not be copied, published or used in any way, including for any purpose other than that for which it is intended, without prior written permission from Opsun. Transfer and/or transmission of this document to third parties, in whole or in part, in any form or by any means, electronic, or any other means, is prohibited. Recipients of this document, by its receipt, agree to the unused integrity of the building, the integrity of which the client is responsible for maintaining. Unless specifically stated, all dimensions shown in the approved design layout and/or specific plan/elevation sketches are advisory offered to Opsun. Opsun assumes no responsibility for the accuracy of dimensions displayed or printing on objects. No warranty is provided or implied as to the accuracy of this plan. The client is solely responsible for the accuracy of the dimensions of the roof, structure, and/or other objects used to support the installation. Opsun assumes no responsibility for any damages which may result from using, and/or relying on the plan to support the installation. Do not scale the drawing. By accepting the drawing, you agree to the terms of the NDA agreement with the Opsun Company.

Note

#	Review/Issue	Date

Array Information

Type of mounting : SunRail Structure

Modules : 60 Cells /270W

Tilt Angle(°) : 10°

Qty Panels: panels

Azimut (°): 0°

Array Size (KW): 12.7KW DC

Client Info

Sunrise Solar SOLUTIONS

SunRise Solar Solution LLC
510 North State Road
Briarcliff Manor, NY, USA
Contact : Doug Hertz
Phone : 914.762.7622
doug@sunrisesolarllc.com

Title

CROSSRAIL-1

Project Info

Ridge St.

Contact: Doug Hertz
Phone : 914.762.7622
doug@sunrisesolarllc.com

Date 14/02/2017

Project ID RSE-161116-1

Draft : FM | Check : FGG

Scale : 1:50 | Page NO. PV01-8/14

6/28/17

STATE OF NEW YORK
MOHAMED THABET AL HARASH
090048
LICENSED PROFESSIONAL ENGINEER

1111C:\WORKING\

SRS3-Rail Installation
1. Slide the SRS3-Rail into the SR-C-SRS clamp by tilting it and secure it into the clamp channel. The SRS3-Rail must be flat on the SR-C-SRS clamp and fully inserted in the channel.

2. Adjust the SRS3-Rail position by sliding it along the clamp, if necessary.

3. Secure with the SR-SC clamp.

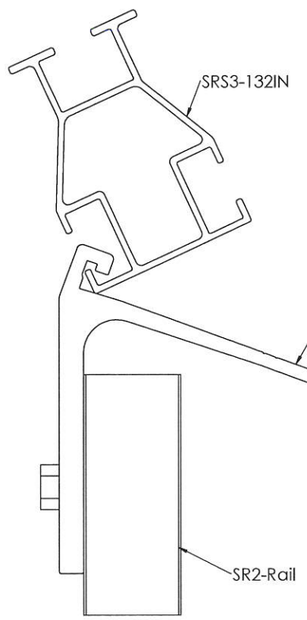

SCALE 1:1

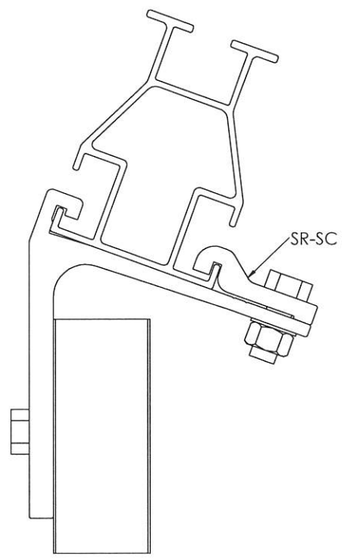

SCALE 1:1

SRL-RL5 Installation

NORMAL JOINT
Place two(2) SRL-RL5 at each SRS3-Rail intersection.

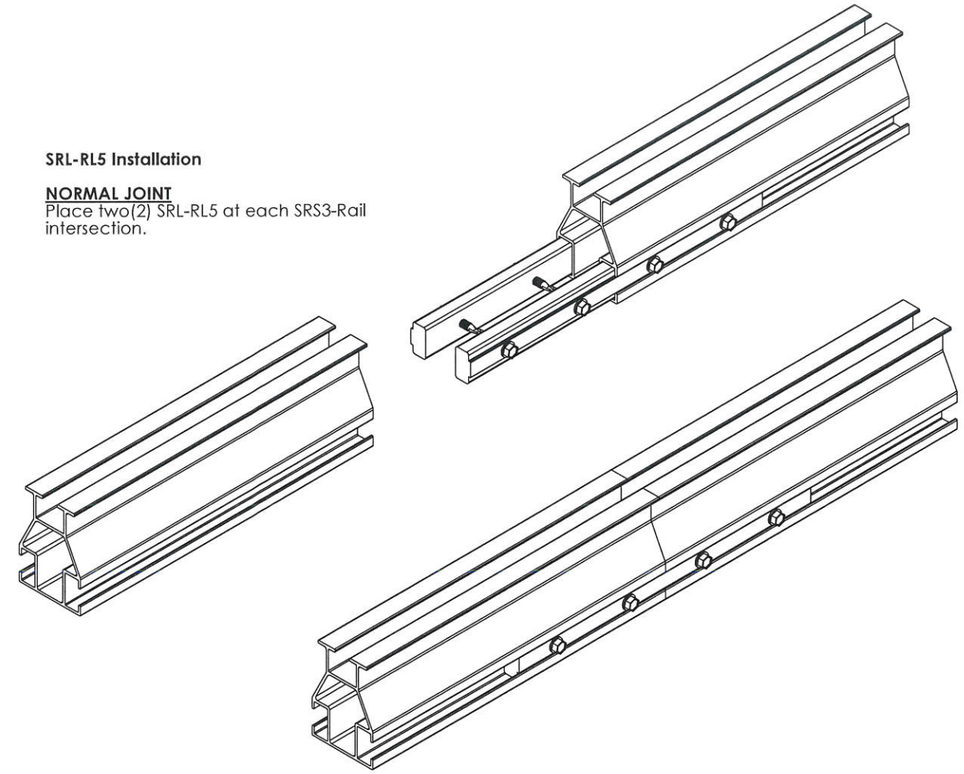

THERMAL EXPENSION JOINT
Once every 40' (once every two rails), leave a 12mm gap between rails and screws (2 screws on each side, 4 total) the SRL-RL5 only to one of the SRS3-Rail.

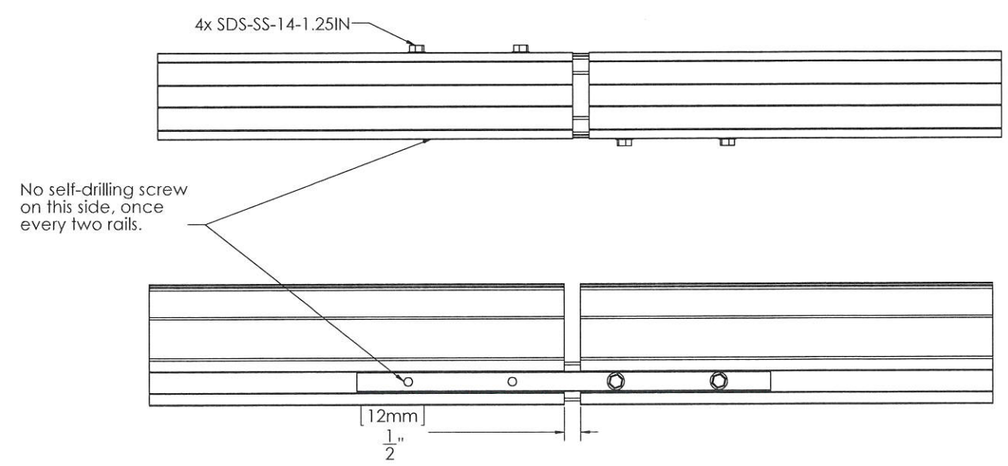

opsun systems inc

Project Manager : Frederic Martine-ou
Phone : 1 (416)-800-1614
E-mail : project@opsun.com
www.opsun.com

1901 Forbes Street
Whitby, Ontario L1N 9A7
Canada

Notice

All rights reserved. All information contained in this document is the property of Opsun Systems Inc. Any copy, in whole or in part, photographed or in any way reproduced, any use of the information contained in this document without the express written permission from Opsun Systems and/or Sunrise Solar Solutions is prohibited. Any use of the information in the present document, including theory, information, detailed Opsun does not offer any warranty concerning the accuracy of the information, nor does it assume any liability or responsibility for any loss or damage, any disadvantage or injury resulting from the use of the information in the present document will also not be offered to Opsun Systems and/or Sunrise Solar Solutions. Any use of the displayed drawing in Opsun Inc. presents a breach of copyright and Opsun Inc. will not be liable nor responsible for the longevity and maintenance of the size and quality of the drawing. Opsun Inc. reserves the right to alter, add or delete at the time it deems fit without prior notice. Do not scale the drawing. By accepting the drawing, you agree to return it to Opsun Inc. upon request and, the above statement.

Note

6/18/17

STATE OF NEW YORK
MOHAMMED THABET ALHARASH
094048
LICENSED PROFESSIONAL ENGINEER

#	Review/Issue	Date

Array Information

Type of mounting : Sunfloat Structure
Module: 60 Cells /270W
Tilt Angle(°) : 10°
Qty Panels: panels
Azimuit (°): 0°
Array Size (kW): 12.7kW DC

Client Info

Sunrise Solar Solutions
Sunrise Solar Solution LLC
510 North State Road
Briarcliff Manor, NY, USA
Contact : Doug Hertz
Phone : 914.762.7422
doug@sunrisesolarllc.com

Title
CROSSRAILS-2

Project Info
Ridge St.

Contact: Doug Hertz
Phone : 914.762.7422
doug@sunrisesolarllc.com

Date 14/02/2017
Project ID RSE-161116-1
Draft : FM
Check : FGG
Scale : 1:2
Page NO. PV-08/01

1111C:\WORKING\

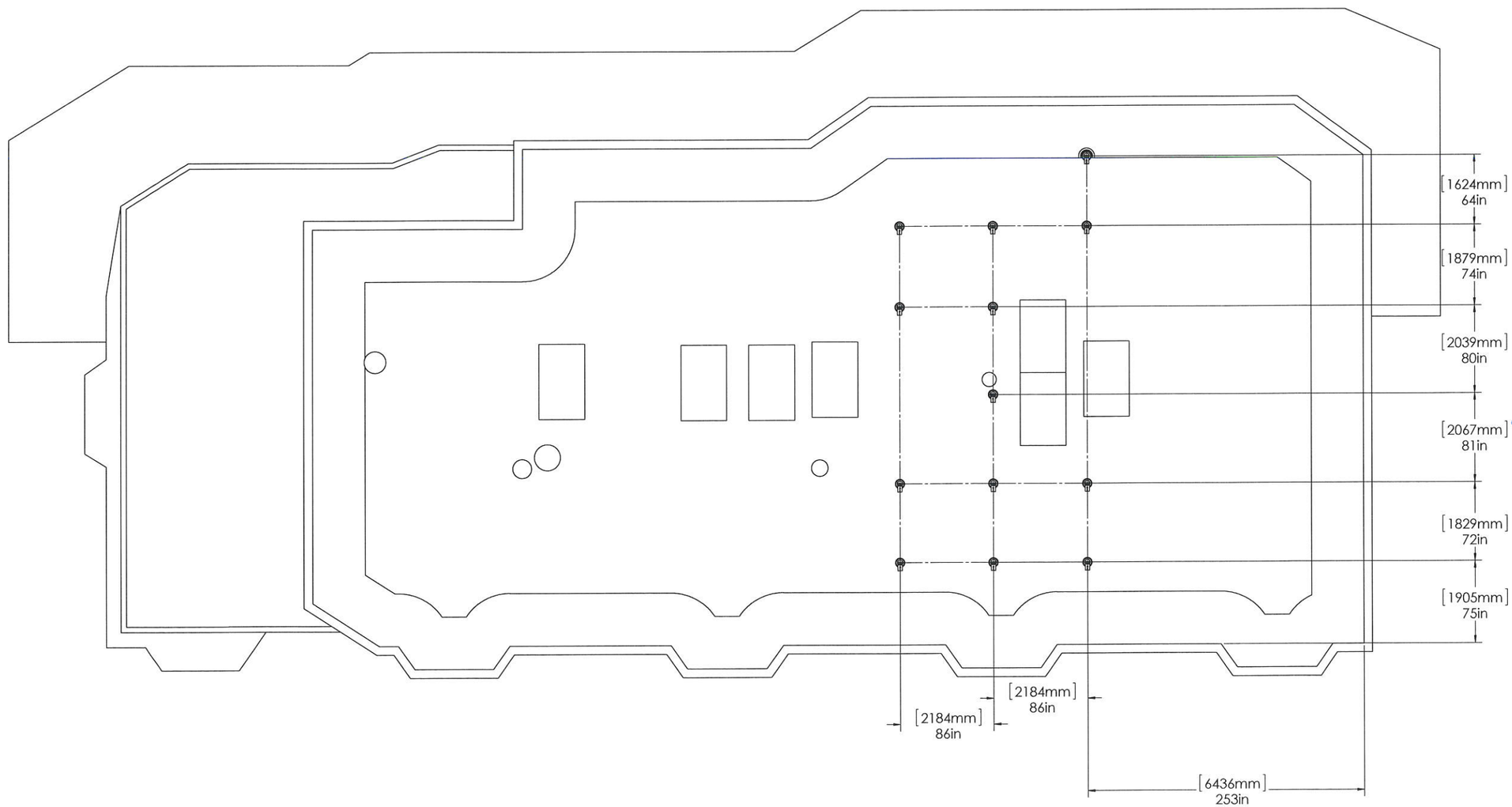

opsun systems inc

Project Manager : Frederic Martinez
Phone : 1 (416)-800-6414
E-mail : projects@opsun.com
www.opsun.com

1901 Forbes Street
Whitby, Ontario L1R 9A7
Canada

Notice

All rights reserved. All information contained in this document is confidential and proprietary to Opsun. This document may not be copied, distributed, or disclosed to third parties in any manner, electronic or paper, without the express written permission of Opsun. Anyone who business with permission from Opsun, Installer and/or Distributor must agree to keep all information in this document, made by the present information, in any fashion, confidential. Installer and/or Distributor must also agree not to use the information, including but not limited to the structural integrity of the building, the integrity of electrical cables and conduits, the electrical integrity of the photovoltaic system, the electronic integrity of the equipment and/or devices and the specific equipment and parts, for purposes other than those for which specific permission has been granted by Opsun. Anyone who has been granted permission to use the information described herein agrees to comply with all instructions provided by Opsun, including but not limited to instructions concerning the installation of equipment in accordance with applicable codes, and shall be responsible for the proper installation, maintenance, upkeep, repair, replacement, and insurance of the equipment, and for the safety, security, and suitability of the roof to support the installation. Anyone who has been granted permission to use the information in this document shall, upon request, sign a written agreement with Opsun, memorializing the above-referenced.

Note

6/04/17

STATE OF NEW YORK
MOHAMED THABET AL HARASH
094048
LICENSED PROFESSIONAL ENGINEER

#	Review/Issue	Date

Array Information

Type of mounting : SunRail Structure
Modules : 60 Cells /270W
Tilt Angle(°) : 10°
Qty Panels: panels
Azimut (°): 0°
Array Size (kW): 12.7kW DC

Client Info

Sunrise Solar SOLUTIONS
SunRise Solar Solution LLC
510 North State Road
Briarcliff Manor, NY, USA
Contact : Doug Hertz
Phone : 914.762.7622
doug@sunrisesolarllc.com

Title

ANCHOR LAYOUT

Project Info

Ridge St.

Contact: Doug Hertz
Phone : 914.762.7622
doug@sunrisesolarllc.com

Date 14/02/2017

Project ID RSE-161116-1

Draft : FM | Check : FGG

Scale : 1:50 | Page NO. PV01-10/14

111C:\WORKING\

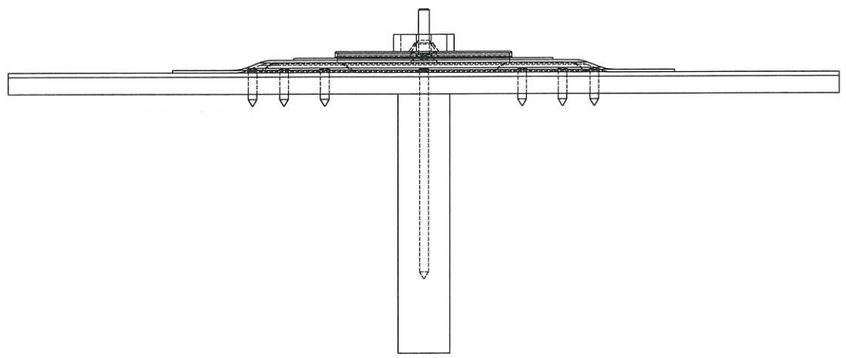

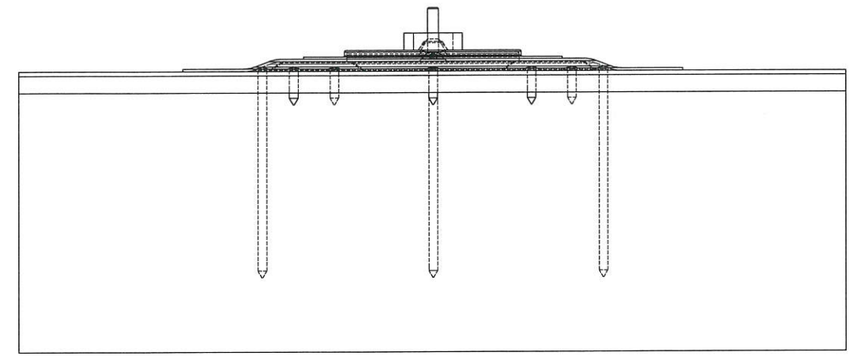

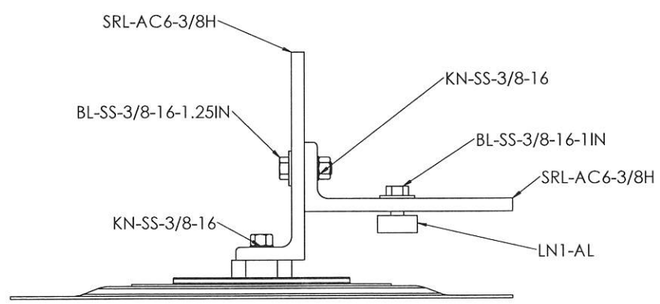

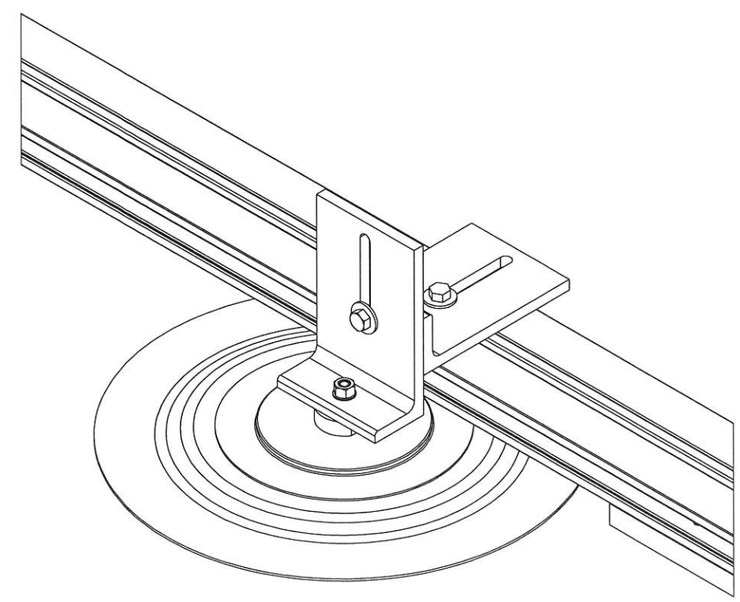

opsun systems inc

Project Manager : Frederic Martinez
Phone : 1 (416)400-1414
E-mail : projects@opsun.com
www.opsun.com

1901 Forbes Street
Whitby, Ontario L1N 7A7
Canada

Notice

All information contained in this document remains the sole property of Opsun. The document may not be reproduced, in whole or in part, nor shall it be used, shared or disclosed to any other person without permission from Opsun. Neither Opsun nor any of its employees make any warranty, express or implied, or assume any liability or responsibility for any third party information, or any third party product or process disclosed, or represent that its use would not infringe privately owned rights. The integrity of electrical, structural/integrity of the building, the integrity of electrical, block and structural components of the building, and any other elements more or less significant descriptions and/or specifications are not fully and accurately defined or shown on this document. Opsun assumes no responsibility for any damages to, or injuries to, any person or property as a result of using, or relying on, this document. Opsun is not responsible for the integrity and/or resistance of the roof structure, the integrity of the electrical system, the integrity, relevancy, and adequate of the roof to support the installation described in this document. By using or relying on this document, the client understands and is full agreement with the above statement.

Note

6/12/17

STATE OF NEW YORK
MOHAMED THABET AL HARASH
094048
LICENSED PROFESSIONAL ENGINEER

#	Review/Issue	Date

Array Information

Type of mounting : Sunrail Structure

Modules : 60 Cells /270W

Tilt Angle(°) : 10°

Qty Panels: panels

Azimut (°): 0°

Array Size (kW): 12.7kW DC

Client Info

Sunrise Solar SOLUTIONS

SunRise Solar Solution LLC
510 North State Road
Briarcliff Manor, NY, USA

Contact : Doug Hertz
Phone : 914.762.7622
doug@sunrisesolarllc.com

Title

ANCHOR DETAIL

Project Info

Ridge St.

Contact: Doug Hertz
Phone : 914.762.7622
doug@sunrisesolarllc.com

Date
14/02/2017

Project ID
RSE-161116-1

Draft :	Check :
FM	FGG
Scale :	Page NO.
1:2	PV01-11/14

1111C:\WORKING\

Clicloc Assembly Instruction

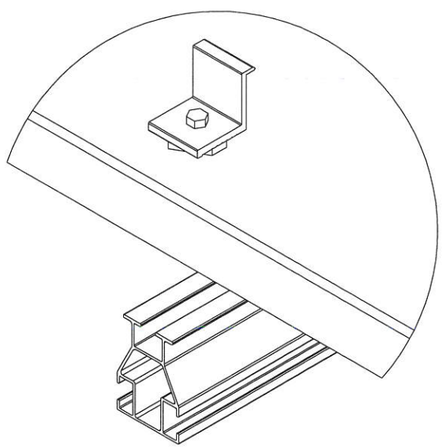

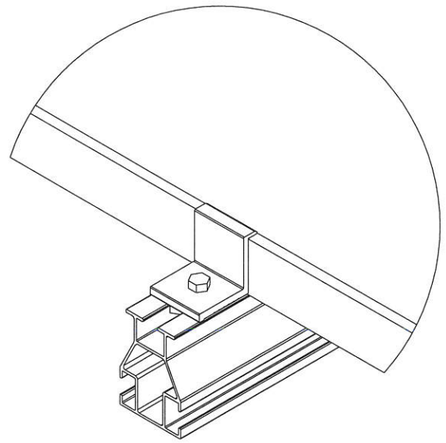

End Row Clicloc (SRL-ZC)

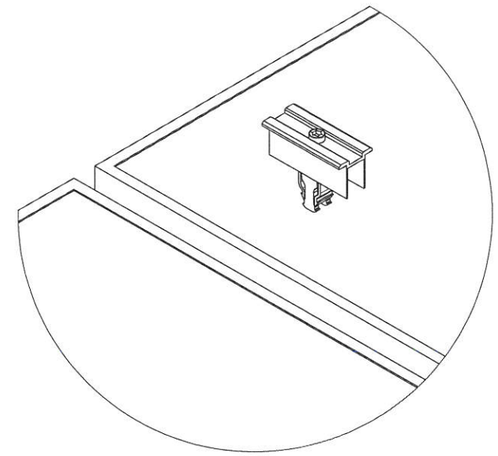

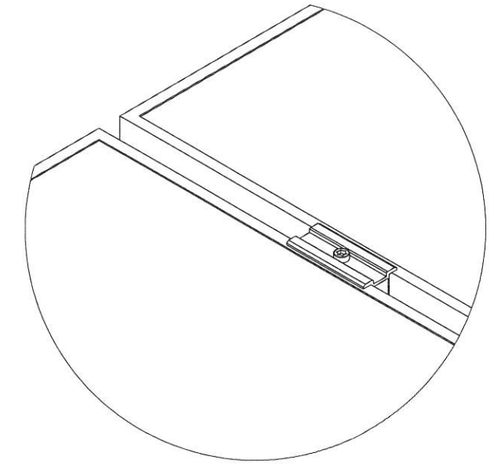

Mid Clamp Clicloc (U-Clicloc)

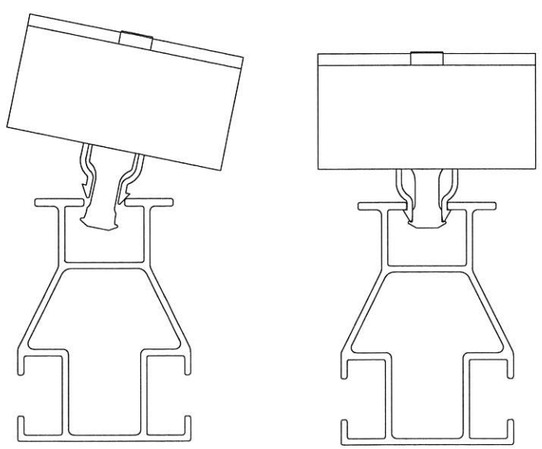

Tilt the Clic loc for an easy installation, then torque the Torx Bolt to lock it in posiiton.

End Row Clamp (SRL-ZC)

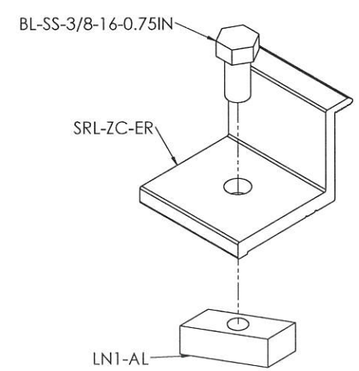

Mid Clamp ClicLoc (U-ClicLoc)

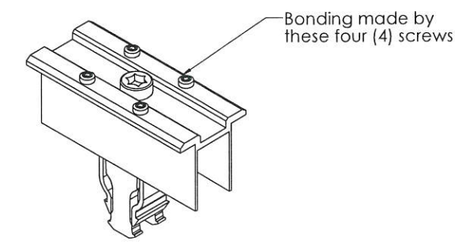

opsun systems inc
Project Manager : Frederic Mailhiot-Ste
Phone : 1 (514)-800-1414
E-mail : project@opsun.com
www.opsun.com

1901 Forbes Street
Whitby, Ontario L1N 9A7
Canada

Notice

All rights reserved. All information contained in this document is confidential and proprietary to Opsun Systems Inc. Such information may not be used, disclosed or reproduced without the express written permission of Opsun Systems Inc. Any use of such information for any purpose other than the express written purpose from Opsun Systems Inc. is strictly prohibited. Unless otherwise agreed to in writing by Opsun Systems Inc. the information contained in this document is proprietary to the present information, including drawings, specifications, Opsun does not affirmatively represent the accuracy or completeness of the information, and Opsun shall not be liable for any loss or damage arising from such information

Electrical Detail -SRS-Clicloc

WEEB-Jumper Assembly Detail

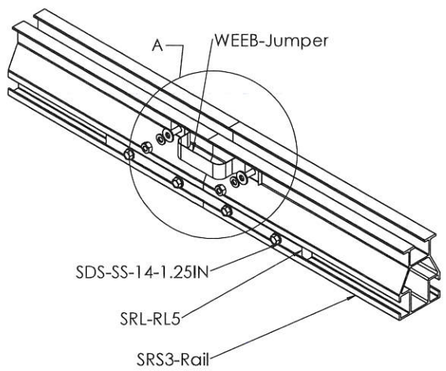

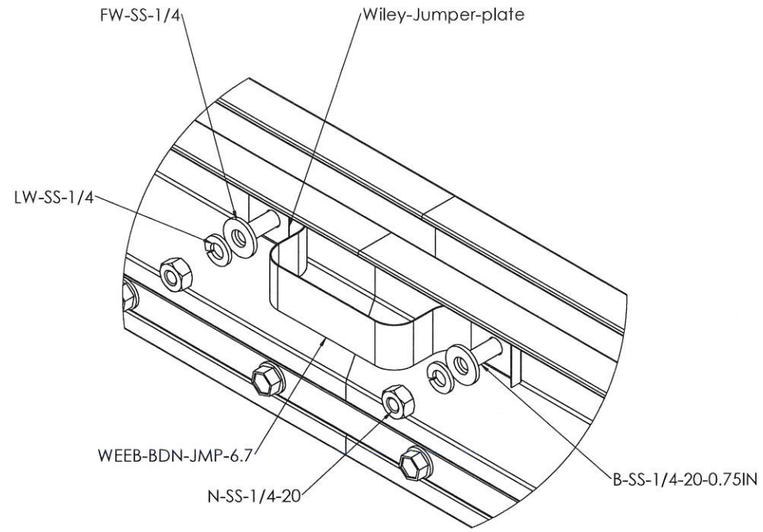

DETAIL A
SCALE 1 : 1

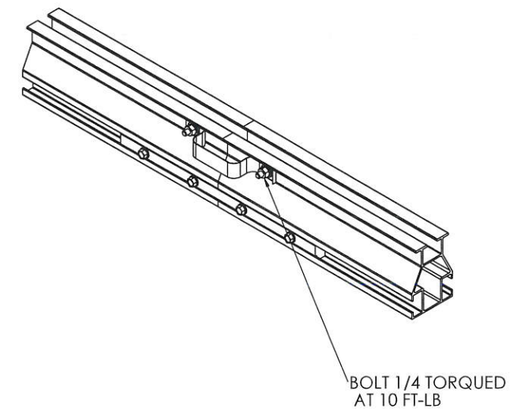

Ground Lug Assembly Detail

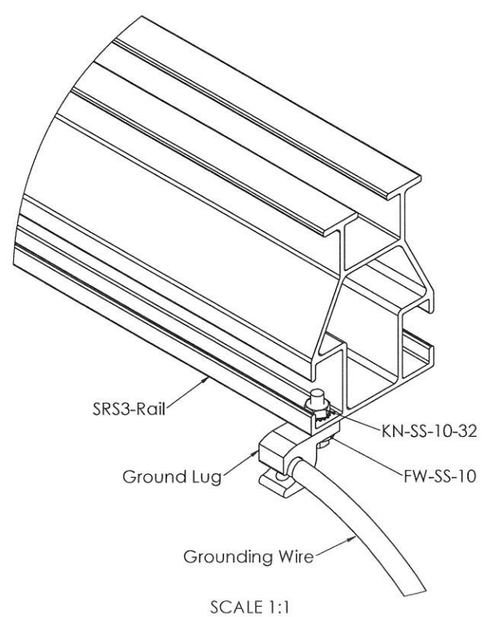

SCALE 1:1

opsun systems inc
Project Manager : Frédéric Martineau
Phone : 1 (416)800-1614
E-mail : project@opsun.com
www.opsun.com

1901 Forbes Street
Whitby, Ontario L1N 7A7
Canada

Notice

All rights reserved. All information contained in this document is Opsun Systems Inc. property. This document shall not be copied, photographed in any way, reproduced, stored, electronically, mechanically, translated or in whole or in part without prior written consent of Opsun Systems Inc. Contractors or suppliers working on Opsun Systems Inc. projects must not disclose information contained in this document to third parties. Opsun does not offer any warranty concerning the accuracy of the information. Opsun does not assume any liability on behalf of the intended parties, any modifications or alterations made to the document by any third parties, or any specific engineered solution and assumes no liability for Opsun Systems Inc. products if installed in any manner other than in accordance with Opsun Systems Inc. instructions provided or implied by Opsun. Contractors or suppliers working on Opsun Systems Inc. projects must ensure that Opsun Systems Inc. products are installed in accordance with all applicable codes, regulations, safety others and systems, adhering to and meeting all the requirements of the authority having jurisdiction and other relevant rulings. Do not scale the drawing. By accepting this document, you agree to be bound by the terms of the agreement with the above statement.

Note

6/14/17

STATE OF NEW YORK
MOHAMED THABET ALHARASH
094048
LICENSED PROFESSIONAL ENGINEER

#	Review/Issue	Date

Array Information

Type of mounting : Sentral Structure

Module: s0 Cells /270W

Tilt Angle(°) : 10°

Qty Panels panels

Azimut (°) : 0°

Array Size (kW): 12.7kW DC

Client Info

Sunrise Solar Solutions

SunRise Solar Solution LLC
510 North State Road
Briarcliff Manor, NY, USA
Contact : Doug Hertz
Phone : 914.762.7622
doug@sunrisesolarllc.com

Title

GROUNDING

Project Info

Ridge St.

Contact: Doug Hertz
Phone : 914.762.7622
doug@sunrisesolarllc.com

Date 14/02/2017

Project ID RSE-161116-1

Draft : FM | Check : FGG

Scale : 1:3 | Page NO. PV-07/01

!!!!C:\WORKING\

WIND LOAD PARMETERS (ASCE 7-10)	
Wind Speed (mph)	115
Exposure	D
Exposure Coefficient, Kz	1.1
Topographic Coefficient, Kzt	1.038
Directional Coefficient, Kd	0.85
Velocity Pressure, qz (lb/ft²)	32.9
Panel Inclinaison	10°

SNOW LOAD PARAMETERS (ASCE 7-10)	
Ground Snow Load (lb/ft²)	30
Snow Importance Factor, Is	1.0
Exposure Factor, Ce	0.8
Thermal Factor, Ct	1.0
Slope Factor, Cs	0.92
Snow Load (lb/ft²)	15.46

UPLIFT FORCE PER PANEL (ALL PANELS)				
Fe	Fz	CpCg VERTICAL	UNFACTORED PRESSURE VALUES (PSF)	FACTORED UPLIFT FORCE PER PANEL (LBS)
1.0	1.0	-0.95	-32.9	292

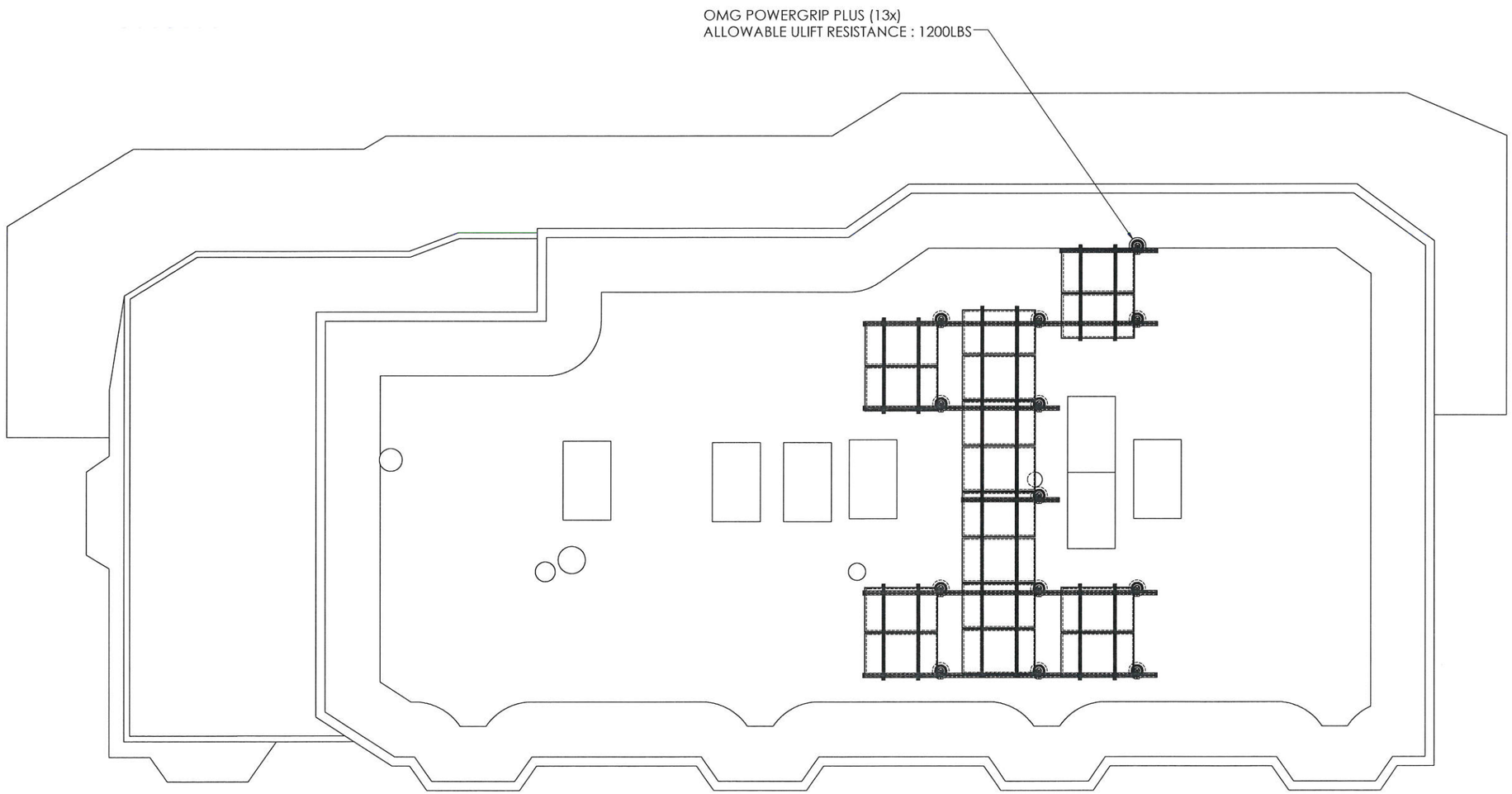

opsun systems inc
Project Manager : Frederic Martineau
Phone : 1 (416)800-1614
E-mail : projects@opsun.com
www.opsun.com

1901 Fairbairn Street
Whitby, Ontario L1N 9A7
Canada

Notice

All rights reserved. Information contained in this document is proprietary to Opsun Systems Inc. and may not be copied, photographed in any way, in whole or in part, without written permission, nor publicly displayed, nor electronically reproduced, in whole or in part, without written permission, nor used for any purpose except in connection with a work or project for Opsun Systems Inc. Opsun does not offer any warranty concerning the accuracy, adequacy, or completeness of the information and shall not be liable for any damages, whatsoever, or for any direct, indirect, special or consequential damages arising out of, or in connection with, the use of this document. Any and all proposed changes must first be reviewed and approved by Opsun. Only those changes which have been reviewed, modified by Opsun, with regards to, and Opsun shall not be held responsible for any modifications to, structural, electrical, or safety of any, roof systems, ballasting or anchoring of the system, or any other aspect of the system which affects roof or structural integrity. Do not scale this drawing. By proceeding the recipient agrees to the terms of this EULA and agreement with the above statement.

Note

6/12/17

STATE OF NEW YORK
MOHAMED THABET ALHARASH
094048
LICENSED PROFESSIONAL ENGINEER

#	Review/Issue	Date

Array Information

Type of mounting : SunRail Structure

Modules : 60 Cells /270W

Tilt Angle(°) : 10°

Qty Panels: panels

Azimut (°) : 0°

Array Size (kW): 12.7kW DC

Client Info

Sunrise Solar SOLUTIONS

SunRise Solar Solution LLC
510 North State Road
Briarcliff Manor, NY, USA
Contact : Doug Hertz
Phone : 914.762.7422
doug@sunrisesolarllc.com

Title

ZONES

Project Info

Ridge St.

Contact: Doug Hertz
Phone : 914.762.7422
doug@sunrisesolarllc.com

Date
14/02/2017

Project ID
RSE-161116-1

Draft :	Check :
FM	FGG
Scale : 1:50	Page NO. PV01-14/14

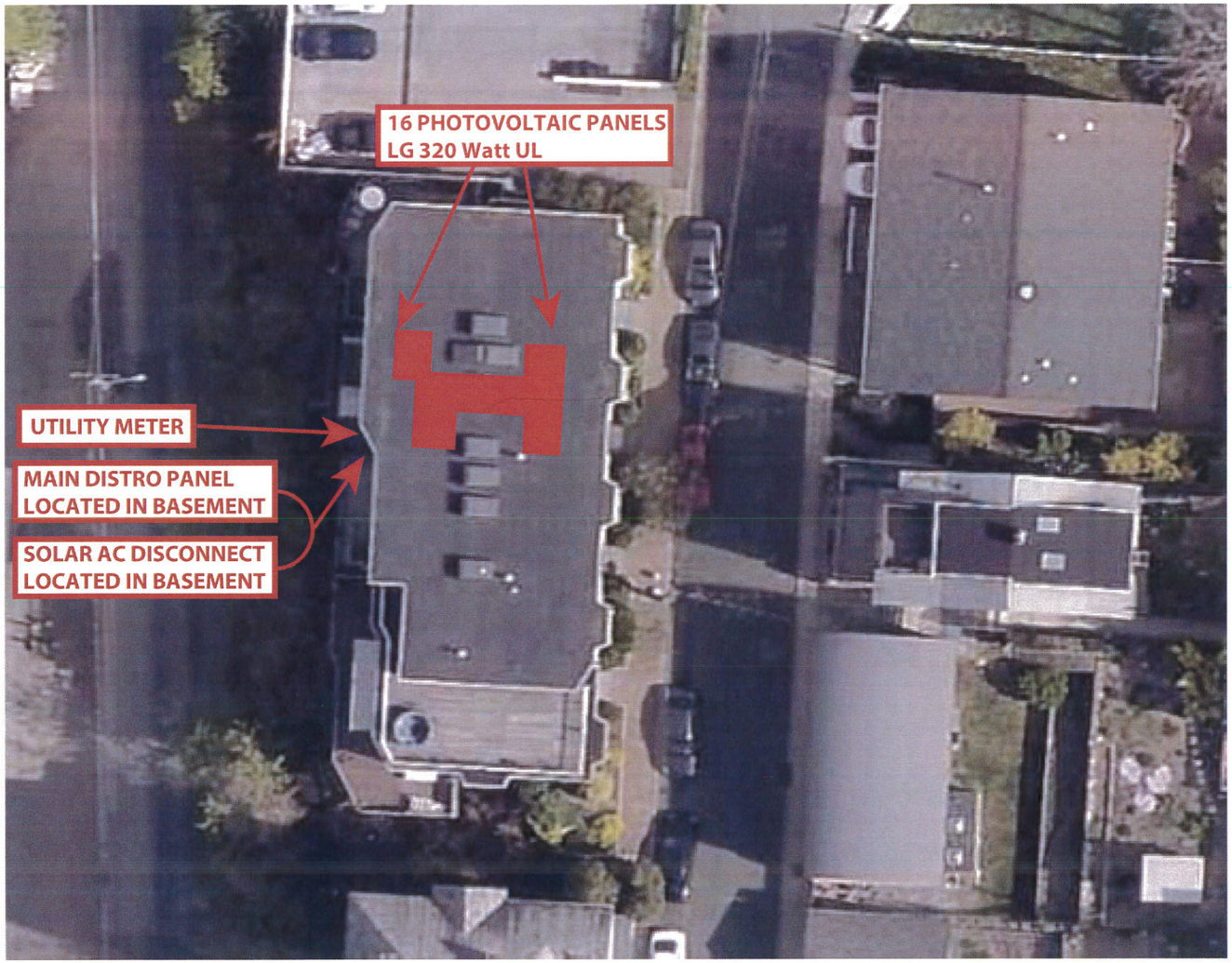

General Notes:

1. Modules to be LG 320
2. Inverters to be Enphase S 280
3. Racking to be Opsun
4. Racking to be installed as per Opsun Manufacturer's Specifications.
5. Modules to be installed as per LG Installation Manual

Sunrise Solar Solutions, LLC
510 North State Road
Briarcliff Manor, NY 10510
(914) 762-7622

Site Plan

Cantor Residence
9 Ridge Street
Hasting-on-Hudson, NY 10706
Sect. 4.70 Block 52 Lot 47.4
Ph: 917 312 3877

DATE	VER.	DRAWN BY	CHECKED BY
04/28/2016	V1	BP	
03/09/2017	R1	BP	
03/10/2017	R2	BP	

NOTES:
- 16 Photovolatic Panels
- LG 320
- System Size - 5.12 kW DC SYSTEM
  - 4.32 kW AC
- Azimuth: 183°
- Tilt: 10°

STATE OF NEW YORK
MOHAMED THABET ALHARASH
094048
LICENSED PROFESSIONAL ENGINEER
6/12/17

S-1

ROOF MOUNT

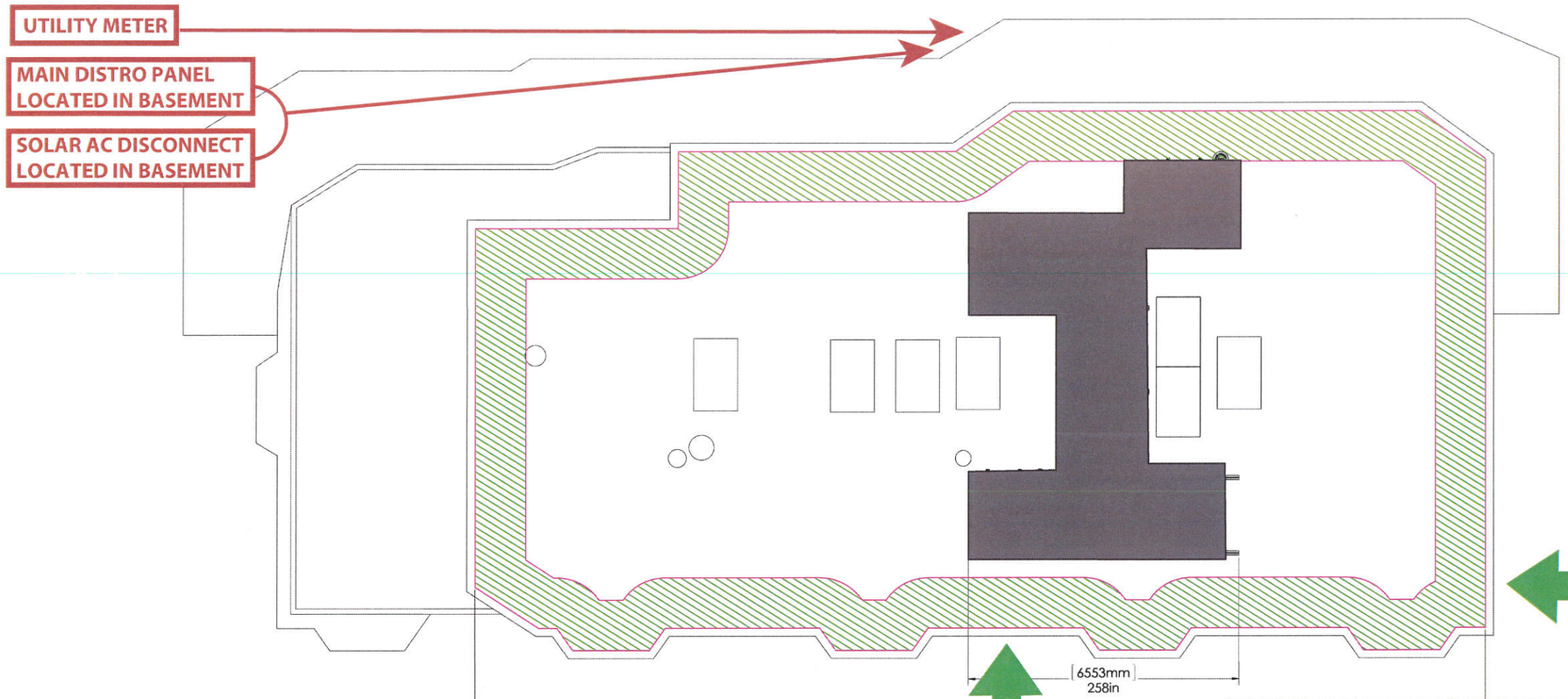

Sunrise Solar Solutions, LLC

510 North State Road

Briarcliff Manor, NY 10510

(914) 762-7622

Site Plan

Cantor Residence
9 Ridge Street
Hasting-on-Hudson, NY 10706
Sect. 4.70 Block 52 Lot 47.4
Ph: 917 312 3877

DATE	VER.	DRAWN BY	CHECKED BY
03/06/2017	V1	BP	
03/09/2017	R1	BP	

NOTES:
- 16 Photovolatic Panels
- LG 320
-System Size - 5.12 kW DC SYSTEM
- 4.32 kW AC

- Azimuth: 183°
- Tilt: 10°

STATE OF NEW YORK
MOHAMED THABET ALHARASH
094048
LICENSED PROFESSIONAL ENGINEER
6/14/17

S-2

ROOF MOUNT

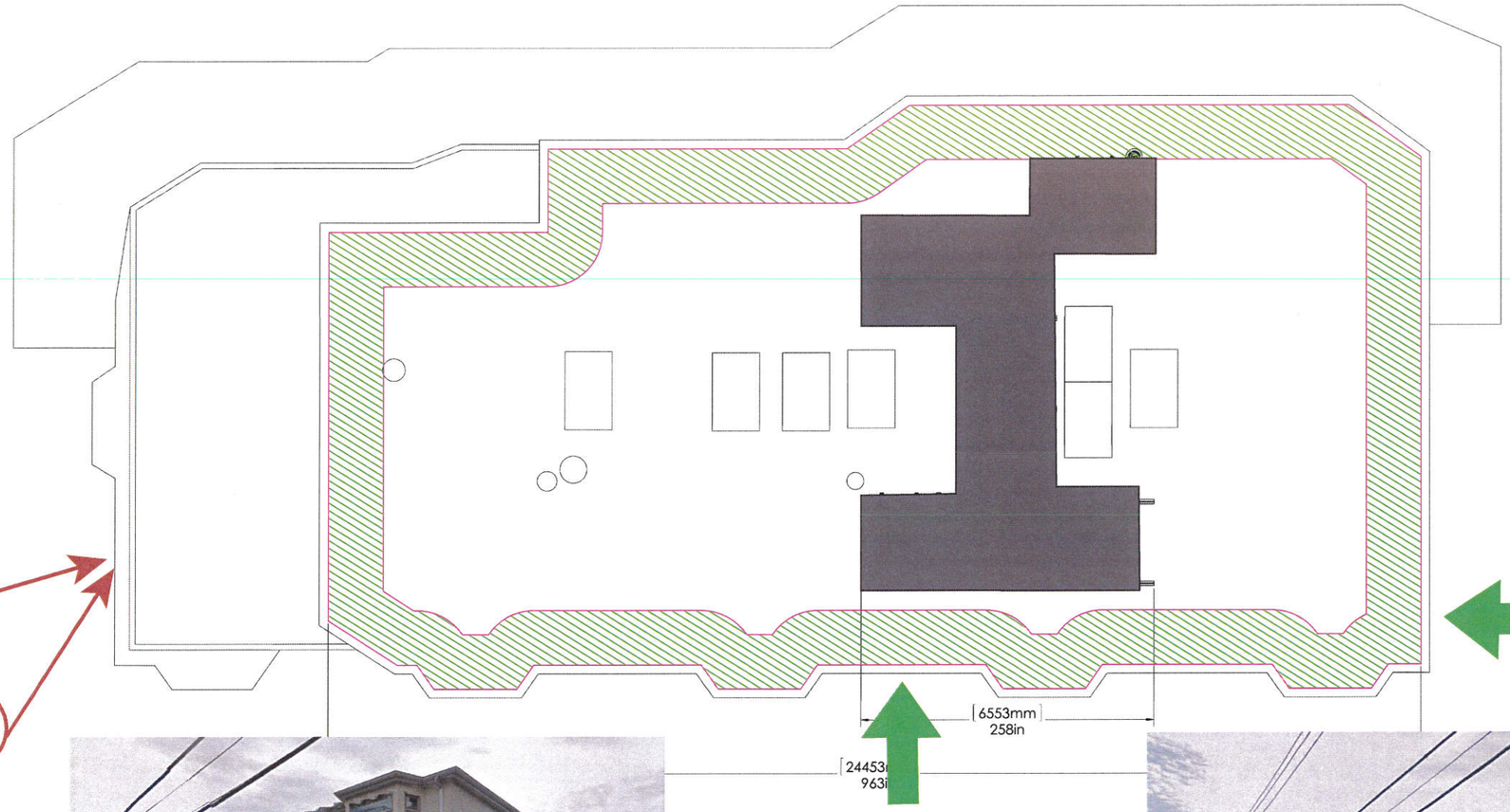

UTILITY METER

MAIN DISTRO PANEL LOCATED IN BASEMENT

SOLAR AC DISCONNECT LOCATED IN BASEMENT

Sunrise Solar Solutions, LLC

510 North State Road

Briarcliff Manor, NY 10510

(914) 762-7622

Site Plan

Cantor Residence
9 Ridge Street
Hasting-on-Hudson, NY 10706
Sect. 4.70 Block 52 Lot 47.4
Ph: 917 312 3877

DATE	VER.	DRAWN BY	CHECKED BY
03/06/2017	V1	BP	

NOTES:
- 16 Photovolatic Panels
- LG 320
-System Size - 5.12 kW DC SYSTEM
- 4.32 kW AC

- Azimuth: 183°
- Tilt: 10°

STATE OF NEW YORK
MOHAMED THABET AL HARASH
094048
LICENSED PROFESSIONAL ENGINEER
6/14/17

S-5

ROOF MOUNT

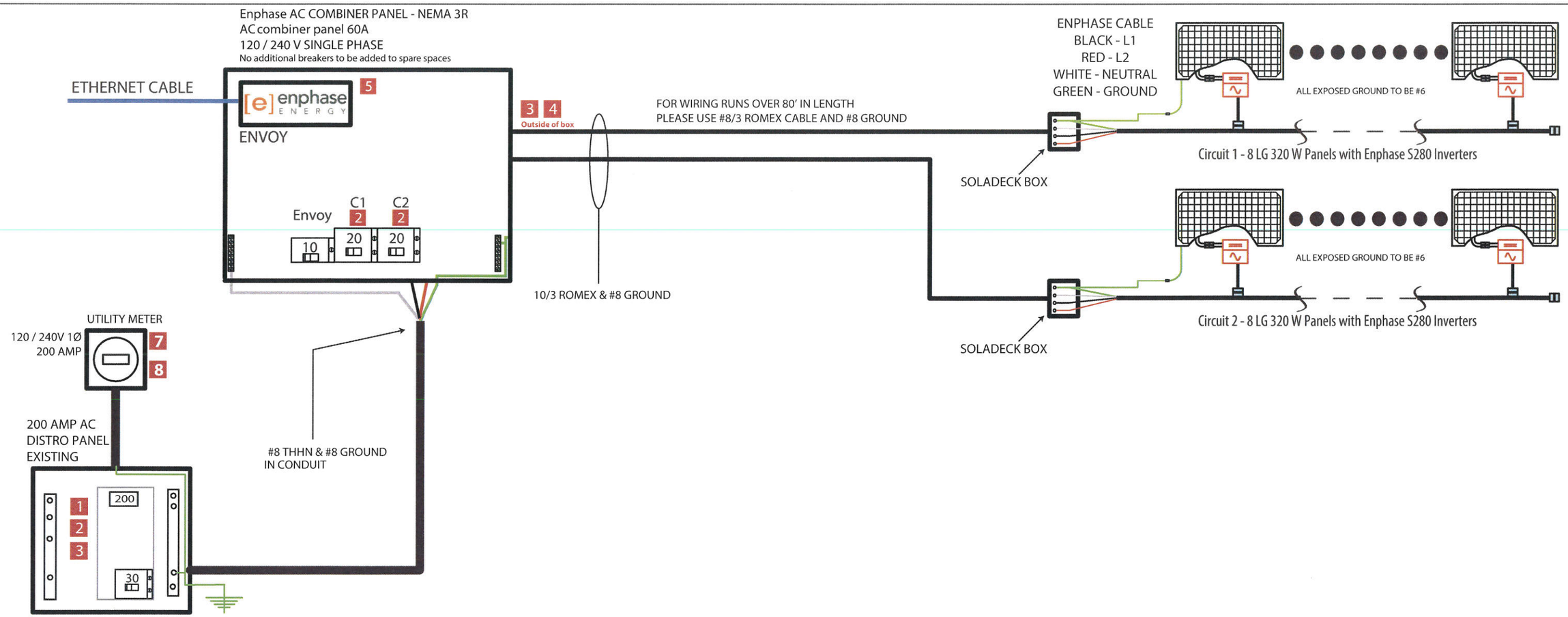

Notes:
- Labels to comply w PSC requirements & NEC
- All wiring to comply w NEC Code Article 230
- Ground to be continuous
- Ground wire connection to be "irreversible"
- Meter pan to be grounded only
- Neutral to pass through Meter Pan
- No Line Side Tap connection in Utility Meter Pan

Consumption monitoring current transformers to be installed on the main service lines and connected to the solar envoy monitoring system

PLEASE REFER TO PAGE E-2 FOR LABELING KEY

6/14/17

STATE OF NEW YORK
MOHAMED THABET AL HARASH
094048
LICENSED PROFESSIONAL ENGINEER

Sunrise Solar Solutions, LLC
510 North State Road
Briarcliff Manor, NY 10510
(914) 762-7622

Elec 3 Wire Diagram

Cantor Residence
9 Ridge Street
Hasting-on-Hudson, NY 10706
Sect. 4.70 Block 52 Lot 47.4
Ph: 917 312 3877

DATE	VER.	DRAWN BY	CHECKED BY
04/28/2016	V1	BP	DH

Circuit Calculations:

Max 14 Inverters per circuit, 20 AMP OCPD/ Circuit
14 x 270 Watt Inverters. Max Output = 3,780
3,780 W / 240 V = 15.75 Amps x 1.25 = 19.69
Use 20 AMP OCPD

Total 16 x 270 Watt Inverters. Max Output = 4,320 W AC
4,320 W / 240 V = 18Amps x 1.25 = 22.5
Use 30 Amp OCPD

E-1

SYSTEM SPECS:
Nominal AC Voltage: 240 V
Max Current: 18 A

AL-IMAN Group, LLC
Engineering • Construction • Management

Mr. Sam Mason
Sunrise Solar Solutions, LLC
510 North State Road
Briarcliff Manor, NY 10510

March 10, 2017

RE: Cantor Residence – 9 Ridge Street Hastings-on-Hudson, NY 10706
AIG Project # 17.311

Mr. Mason:

We have reviewed the proposed solar array and the structure(s) at the above referenced address.

The array consists of (16) LG modules on the residence, mounted on an OpSun racking system with a maximum attachment spacing of 4'-0" on center. Attachments to be OMG Powergrip and mounted in accordance with the details in the OpSun drawings, dated 2/14/2017.

We hereby certify that the existing structure, with the addition of the proposed solar energy devices is capable of supporting the design loads required by ASCE 7-10, IRC 2015, and the 2016 NYS Uniform Code Supplement.

We have attached the calculation for the critical roof member for the structure – a TJI engineered wood joist, checked in accordance with the manufacturer's tabulated data with the loads in accordance with ASCE 7-10.

Please feel free to contact us should you have any comments or questions.

Respectfully yours,

Mohamed T. AL HARASH

3/10/17

STATE OF NEW YORK
MOHAMED THABET AL HARASH
094048
LICENSED PROFESSIONAL ENGINEER

Dr. Mohamed T. AL HARASH, Sc.D., P.E., S.E. - NCEES
Director of Operations

cc: Matthew Boyce, PE
Project Structural Engineer

2318 Woodson Road, # 140007 Saint Louis, MO 63114
Tel: 314.739.0515 Fax: 253.399.0377
al_imangroup@yahoo.com www.al-imangroup.com

Project:	9 RIDGE STREET
Sheet:	1/1
Date: 3/10/17	By: MJB

SOLAR INSTALLATION

ROOF STRUCTURE

TJI 230 JOISTS 11 7/8" 16" oc

with 3/4" CDX PLYWOOD WITH FULLY ADHERED MOD. BIT. ROOF

DEAD LOAD 15 psf
LIVE LOAD 30 psf OK PER TJI TABLE FOR 21'-0" SPAN ✓

LIVE LOAD (ACTUAL) = 0.75 (WIND + ROOF SNOW)
= 0.75 (10 psf + 15 psf)
= 18.75 psf < 30 psf OK ✓

AL-IMAN Group, LLC
Engineering • Construction • Management
2318 Woodson Road, # 140007, St. Louis, MO 63114

T: (314) 739-0515
F: (253) 399-0377
al_imangroup@yahoo.com
www.al-imangroup.com

ROOF SPAN TABLE

30L + 15D

ACTUAL SPAN 21'-0"

Maximum Horizontal Clear Spans—Roof

O.C. Spacing	Depth	TJI®	Design Live Load (LL) and Dead Load (DL) in PSF											
			Non-Snow (125%)				Snow Load Area (115%)							
			20LL + 15DL		20LL + 20DL		25LL + 15DL		30LL + 15DL		40LL + 15DL		50LL + 15DL	
			Low	High	Low	High	Low	High	Low	High	Low	High	Low	High
16"	9½"	110	20'-0"	17'-10"	19'-1"	16'-11"	19'-2"	17'-2"	18'-5"	16'-7"	17'-2"	15'-7"	15'-11"	14'-9"
		210	21'-2"	18'-10"	20'-2"	17'-10"	20'-3"	18'-2"	19'-6"	17'-6"	18'-2"	16'-6"	17'-2"	15'-7"
		230	21'-11"	19'-6"	20'-10"	18'-6"	20'-11"	18'-9"	20'-2"	18'-1"	18'-10"	17'-0"	17'-9"	16'-2"
	11⅞"	110	23'-11"	21'-4"	22'-9"	20'-2"	22'-8"	20'-6"	21'-5"	19'-10"	19'-5"	18'-7"	17'-11"	17'-4"
		210	25'-3"	22'-6"	24'-1"	21'-4"	24'-2"	21'-8"	23'-3"	20'-11"	21'-4"	19'-8"	19'-8"	18'-8"
		230	26'-1"	23'-3"	24'-10"	22'-0"	24'-11"	22'-4"	24'-0"	21'-7"	22'-5"	20'-4"	20'-9"	19'-3"
		360	27'-9"	24'-9"	26'-5"	23'-5"	26'-7"	23'-10"	25'-6"	23'-0"	23'-11"	21'-7"	22'-7"	20'-6"
		560	31'-11"	28'-6"	30'-5"	27'-0"	30'-7"	27'-5"	29'-5"	26'-5"	27'-6"	24'-10"	26'-0"	23'-7"
	14"	110	27'-2"	24'-3"	25'-7"	23'-0"	24'-9"	23'-4"	23'-4"	22'-4"	21'-2"	20'-5"	19'-6"	18'-11"
		210	28'-9"	25'-7"	27'-4"	24'-3"	27'-1"	24'-8"	25'-7"	23'-9"	23'-3"	22'-4"	21'-5"	20'-9"
		230	29'-8"	26'-6"	28'-3"	25'-1"	28'-5"	25'-5"	27'-0"	24'-7"	24'-6"	23'-1"	22'-7"	21'-10"
		360	31'-6"	28'-2"	30'-0"	26'-8"	30'-2"	27'-1"	29'-0"	26'-1"	27'-2"	24'-7"	25'-8"	23'-4"
		560	36'-3"	32'-4"	34'-6"	30'-7"	34'-8"	31'-1"	33'-4"	30'-0"	31'-2"	28'-3"	29'-6"	26'-9"
	16"	210	31'-10"	28'-5"	30'-0"	26'-11"	29'-0"	27'-4"	27'-5"	26'-2"	24'-10"	23'-11"	22'-8"	22'-2"
		230	32'-10"	29'-4"	31'-4"	27'-9"	30'-7"	28'-2"	28'-11"	27'-3"	26'-2"	25'-3"	24'-2"	23'-5"
		360	34'-11"	31'-2"	33'-3"	29'-6"	33'-5"	30'-0"	32'-2"	28'-11"	30'-1"	27'-2"	26'-0"	25'-10"
		560	40'-1"	35'-9"	38'-2"	33'-11"	38'-4"	34'-5"	36'-11"	33'-2"	34'-6"	31'-3"	31'-8"	29'-8"
19.2"	9½"	110	18'-9"	16'-9"	17'-11"	15'-10"	18'-0"	16'-1"	17'-3"	15'-7"	15'-9"	14'-7"	14'-6"	13'-10"
		210	19'-10"	17'-9"	18'-11"	16'-9"	19'-0"	17'-0"	18'-3"	16'-5"	17'-1"	15'-5"	15'-11"	14'-8"
		230	20'-7"	18'-4"	19'-7"	17'-4"	19'-8"	17'-7"	18'-11"	17'-0"	17'-8"	16'-0"	16'-8"	15'-2"
	11⅞"	110	22'-5"	20'-0"	21'-5"	19'-0"	20'-9"	19'-3"	19'-7"	18'-7"	17'-9"	17'-1"	16'-4"	15'-10"
		210	23'-9"	21'-2"	22'-7"	20'-0"	22'-8"	20'-4"	21'-5"	19'-8"	19'-6"	18'-6"	17'-11"	17'-4"
		230	24'-6"	21'-10"	23'-4"	20'-8"	23'-5"	21'-0"	22'-6"	20'-3"	20'-6"	19'-1"	18'-11"	18'-1"
		360	26'-1"	23'-3"	24'-10"	22'-0"	24'-11"	22'-4"	24'-0"	21'-7"	22'-5"	20'-3"	21'-2"	19'-3"
		560	30'-0"	26'-9"	28'-7"	25'-4"	28'-8"	25'-9"	27'-7"	24'-10"	25'-9"	23'-4"	24'-4"	22'-2"
	14"	110	25'-1"	22'-10"	23'-4"	21'-7"	22'-7"	21'-5"	21'-4"	20'-4"	19'-4"	18'-7"	17'-0"	17'-3"
		210	27'-0"	24'-1"	25'-7"	22'-10"	24'-9"	23'-2"	23'-4"	22'-4"	21'-2"	20'-5"	18'-10"	18'-11"
		230	27'-10"	24'-10"	26'-6"	23'-7"	26'-1"	23'-11"	24'-7"	23'-1"	22'-4"	21'-6"	20'-7"	19'-11"
		360	29'-7"	26'-5"	28'-2"	25'-0"	28'-4"	25'-5"	27'-3"	24'-6"	25'-6"	23'-1"	21'-7"	21'-8"
		560	34'-0"	30'-4"	32'-5"	28'-9"	32'-7"	29'-2"	31'-4"	28'-2"	29'-3"	26'-6"	26'-5"	25'-2"
	16"	210	29'-5"	26'-8"	27'-5"	25'-4"	26'-5"	25'-2"	25'-0"	23'-11"	22'-3"	21'-10"	18'-10"	20'-2"
		230	30'-11"	27'-7"	28'-11"	26'-1"	27'-11"	26'-6"	26'-4"	25'-2"	23'-11"	23'-0"	21'-2"	21'-3"
		360	32'-10"	29'-3"	31'-3"	27'-9"	31'-5"	28'-2"	30'-2"	27'-2"	25'-7"	25'-3"	21'-7"	21'-8"
		560	37'-8"	33'-7"	35'-10"	31'-10"	36'-0"	32'-4"	34'-8"	31'-2"	31'-3"	29'-4"	26'-5"	25'-5"
24"	9½"	110	17'-5"	15'-6"	16'-7"	14'-8"	16'-5"	14'-11"	15'-6"	14'-5"	14'-1"	13'-6"	13'-0"	12'-7"
		210	18'-5"	16'-5"	17'-6"	15'-6"	17'-7"	15'-9"	16'-11"	15'-3"	15'-5"	14'-4"	14'-3"	13'-7"
		230	19'-0"	17'-0"	18'-1"	16'-1"	18'-2"	16'-4"	17'-6"	15'-9"	16'-3"	14'-10"	15'-0"	14'-0"
	11⅞"	110	20'-7"	18'-7"	19'-2"	17'-7"	18'-6"	17'-7"	17'-6"	16'-8"	15'-10"	15'-3"	13'-7"	14'-2"
		210	21'-11"	19'-7"	20'-11"	18'-7"	20'-4"	18'-10"	19'-2"	18'-2"	17'-5"	16'-9"	15'-0"	15'-6"
		230	22'-8"	20'-3"	21'-7"	19'-2"	21'-5"	19'-5"	20'-3"	18'-9"	18'-4"	17'-8"	16'-11"	16'-4"
		360	24'-1"	21'-6"	23'-0"	20'-5"	23'-1"	20'-8"	22'-2"	20'-0"	20'-5"	18'-9"	17'-3"	17'-4"
		560	27'-9"	24'-9"	26'-5"	23'-6"	26'-7"	23'-10"	25'-6"	23'-0"	23'-10"	21'-7"	21'-1"	20'-3"
	14"	110	22'-5"	21'-1"	20'-10"	19'-6"	20'-2"	19'-2"	19'-0"	18'-2"	16'-0"	16'-7"	13'-7"	14'-7"
		210	24'-7"	22'-4"	22'-11"	21'-1"	22'-1"	21'-0"	20'-10"	19'-11"	17'-10"	18'-3"	15'-0"	16'-1"
		230	25'-9"	23'-0"	24'-1"	21'-10"	23'-4"	22'-2"	22'-0"	21'-0"	20'-0"	19'-3"	16'-11"	17'-0"
		360	27'-5"	24'-6"	26'-1"	23'-2"	26'-3"	23'-6"	25'-0"	22'-8"	20'-5"	20'-2"	17'-3"	17'-4"
		560	31'-6"	28'-1"	30'-0"	26'-8"	30'-2"	27'-0"	29'-0"	26'-1"	24'-11"	23'-7"	21'-1"	20'-3"
	16"	210	26'-3"	24'-9"	24'-6"	22'-11"	23'-8"	22'-6"	21'-9"	21'-4"	17'-10"	18'-9"	15'-0"	16'-1"
		230	27'-9"	25'-6"	25'-10"	24'-2"	24'-11"	23'-8"	23'-7"	22'-6"	20'-0"	19'-9"	16'-11"	17'-0"
		360	30'-4"	27'-1"	28'-11"	25'-8"	28'-2"	26'-1"	25'-0"	24'-1"	20'-5"	20'-2"	17'-3"	17'-4"
		560	34'-10"	31'-2"	33'-2"	29'-6"	33'-4"	29'-11"	30'-6"	28'-3"	24'-11"	23'-7"	21'-1"	20'-3"

How to Use This Table

1. Determine appropriate live and dead load, and the load duration factor.
2. If your slope is 6:12 or less, use the **Low** slope column. If it is between 6:12 and 12:12, use the **High** column.
3. Scan down the column until you find a span that meets or exceeds the span of your application.
4. Select TJI® joist and on-center spacing.

General Notes

- Table is based on:
  - Minimum bearing length of 1¾" end and 3½" intermediate, without web stiffeners.
  - Uniform loads.
  - More restrictive of simple or continuous span.
  - Minimum roof slope of ¼:12.
- Total load values are limited to deflection of L/180 and live load is based on joist deflection of L/240.
- A support beam or wall at the high end is required. Ridge board applications do not provide adequate support.
- For flat roofs or other loading conditions not shown, refer to Weyerhaeuser software.

Short Environmental Assessment Form
Part 1 - Project Information

Instructions for Completing

Part 1 - Project Information. The applicant or project sponsor is responsible for the completion of Part 1. Responses become part of the application for approval or funding, are subject to public review, and may be subject to further verification. Complete Part 1 based on information currently available. If additional research or investigation would be needed to fully respond to any item, please answer as thoroughly as possible based on current information.

Complete all items in Part 1. You may also provide any additional information which you believe will be needed by or useful to the lead agency; attach additional pages as necessary to supplement any item.

Part 1 - Project and Sponsor Information		
Name of Action or Project: Cantor Solar Project		
Project Location (describe, and attach a location map): 9 Ridge Street, Hastings-on-Hudson, NY 10706		
Brief Description of Proposed Action: installation of solar panels on roof of residence		
Name of Applicant or Sponsor: Sunrise Solar Solutions, LLC	Telephone: 914-762-7622 E-Mail: marla@sunrisesolarllc.com	
Address: 510 North State Road		
City/PO: Briarcliff Manor	State: NY	Zip Code: 10510

	NO	YES
1. Does the proposed action only involve the legislative adoption of a plan, local law, ordinance, administrative rule, or regulation? If Yes, attach a narrative description of the intent of the proposed action and the environmental resources that may be affected in the municipality and proceed to Part 2. If no, continue to question 2.	☑	☐
2. Does the proposed action require a permit, approval or funding from any other governmental Agency? If Yes, list agency(s) name and permit or approval: Village of Hastings-on-Hudson building permit	☐	☑

3.a. Total acreage of the site of the proposed action? N/A acres
b. Total acreage to be physically disturbed? N/A acres
c. Total acreage (project site and any contiguous properties) owned or controlled by the applicant or project sponsor? N/A acres

4. Check all land uses that occur on, adjoining and near the proposed action.
☐ Urban ☐ Rural (non-agriculture) ☐ Industrial ☐ Commercial ☑ Residential (suburban)
☐ Forest ☐ Agriculture ☐ Aquatic ☐ Other (specify): _____
☐ Parkland

	NO	YES	N/A
5. Is the proposed action, a. A permitted use under the zoning regulations?	☐	☐	☑
b. Consistent with the adopted comprehensive plan?	☐	☐	☑

	NO	YES
6. Is the proposed action consistent with the predominant character of the existing built or natural landscape?	☐	☑
7. Is the site of the proposed action located in, or does it adjoin, a state listed Critical Environmental Area? If Yes, identify: _____	☑	☐
8. a. Will the proposed action result in a substantial increase in traffic above present levels?	☑	☐
b. Are public transportation service(s) available at or near the site of the proposed action?	☑	☐
c. Are any pedestrian accommodations or bicycle routes available on or near site of the proposed action?	☑	☐
9. Does the proposed action meet or exceed the state energy code requirements? If the proposed action will exceed requirements, describe design features and technologies: _____	☐	☑
10. Will the proposed action connect to an existing public/private water supply? If No, describe method for providing potable water: _____	☑	☐
11. Will the proposed action connect to existing wastewater utilities? If No, describe method for providing wastewater treatment: _____	☑	☐
12. a. Does the site contain a structure that is listed on either the State or National Register of Historic Places?	☑	☐
b. Is the proposed action located in an archeological sensitive area?	☑	☐
13. a. Does any portion of the site of the proposed action, or lands adjoining the proposed action, contain wetlands or other waterbodies regulated by a federal, state or local agency?	☑	☐
b. Would the proposed action physically alter, or encroach into, any existing wetland or waterbody? If Yes, identify the wetland or waterbody and extent of alterations in square feet or acres: _____	☑	☐

14. Identify the typical habitat types that occur on, or are likely to be found on the project site. Check all that apply:
☐ Shoreline ☐ Forest ☐ Agricultural/grasslands ☐ Early mid-successional
☐ Wetland ☐ Urban ☑ Suburban

	NO	YES
15. Does the site of the proposed action contain any species of animal, or associated habitats, listed by the State or Federal government as threatened or endangered?	☑	☐
16. Is the project site located in the 100 year flood plain?	☑	☐
17. Will the proposed action create storm water discharge, either from point or non-point sources? If Yes, a. Will storm water discharges flow to adjacent properties? ☐ NO ☐ YES	☑	☐
b. Will storm water discharges be directed to established conveyance systems (runoff and storm drains)? If Yes, briefly describe: ☐ NO ☐ YES _____		

	NO	YES
18. Does the proposed action include construction or other activities that result in the impoundment of water or other liquids (e.g. retention pond, waste lagoon, dam)? If Yes, explain purpose and size:	☑	☐
19. Has the site of the proposed action or an adjoining property been the location of an active or closed solid waste management facility? If Yes, describe:	☑	☐
20. Has the site of the proposed action or an adjoining property been the subject of remediation (ongoing or completed) for hazardous waste? If Yes, describe:	☑	☐

I AFFIRM THAT THE INFORMATION PROVIDED ABOVE IS TRUE AND ACCURATE TO THE BEST OF MY KNOWLEDGE

Applicant/sponsor name: Douglas Hertz, President, Sunrise Solar Solutions, LLC Date: 6/19/17

Signature:

PRINT FORM

Agency Use Only [If applicable]

Project:

Date:

Short Environmental Assessment Form
Part 2 - Impact Assessment

Part 2 is to be completed by the Lead Agency.
Answer all of the following questions in Part 2 using the information contained in Part 1 and other materials submitted by the project sponsor or otherwise available to the reviewer. When answering the questions the reviewer should be guided by the concept "Have my responses been reasonable considering the scale and context of the proposed action?"

	No, or small impact may occur	Moderate to large impact may occur
1. Will the proposed action create a material conflict with an adopted land use plan or zoning regulations?	☐	☐
2. Will the proposed action result in a change in the use or intensity of use of land?	☐	☐
3. Will the proposed action impair the character or quality of the existing community?	☐	☐
4. Will the proposed action have an impact on the environmental characteristics that caused the establishment of a Critical Environmental Area (CEA)?	☐	☐
5. Will the proposed action result in an adverse change in the existing level of traffic or affect existing infrastructure for mass transit, biking or walkway?	☐	☐
6. Will the proposed action cause an increase in the use of energy and it fails to incorporate reasonably available energy conservation or renewable energy opportunities?	☐	☐
7. Will the proposed action impact existing: a. public / private water supplies?	☐	☐
b. public / private wastewater treatment utilities?	☐	☐
8. Will the proposed action impair the character or quality of important historic, archaeological, architectural or aesthetic resources?	☐	☐
9. Will the proposed action result in an adverse change to natural resources (e.g., wetlands, waterbodies, groundwater, air quality, flora and fauna)?	☐	☐
10. Will the proposed action result in an increase in the potential for erosion, flooding or drainage problems?	☐	☐
11. Will the proposed action create a hazard to environmental resources or human health?	☐	☐

PRINT FORM

Agency Use Only [If applicable]

Project:

Date:

Short Environmental Assessment Form
Part 3 Determination of Significance

For every question in Part 2 that was answered "moderate to large impact may occur", or if there is a need to explain why a particular element of the proposed action may or will not result in a significant adverse environmental impact, please complete Part 3. Part 3 should, in sufficient detail, identify the impact, including any measures or design elements that have been included by the project sponsor to avoid or reduce impacts. Part 3 should also explain how the lead agency determined that the impact may or will not be significant. Each potential impact should be assessed considering its setting, probability of occurring, duration, irreversibility, geographic scope and magnitude. Also consider the potential for short-term, long-term and cumulative impacts.

☐ Check this box if you have determined, based on the information and analysis above, and any supporting documentation, that the proposed action may result in one or more potentially large or significant adverse impacts and an environmental impact statement is required.

☐ Check this box if you have determined, based on the information and analysis above, and any supporting documentation, that the proposed action will not result in any significant adverse environmental impacts.

Name of Lead Agency	Date
Print or Type Name of Responsible Officer in Lead Agency	Title of Responsible Officer
Signature of Responsible Officer in Lead Agency	Signature of Preparer (if different from Responsible Officer)

PRINT FORM

VILLAGE OF HASTINGS-ON-HUDSON

Zoning Board of Appeals

Application and Procedure for Application for Variance/Interpretation/View Preservation

Case number: ..... Date of application: 6/19/17

Property owner: Debra Cantor

Property address: 9 Ridge Street, Hastings-on-Hudson, NY 10706

Name all streets on which the property is located: .....

Sheet: 4.70 Block: 52 Lot/Parcel: 47.4 Zoning District: .....

Applicant: Sunrise Solar Solutions, LLC

Standing of applicant if not owner: Agent / contractor

Address: 510 North State Road, Briarcliff Manor, NY 10510

Daytime phone number: 914-762-7622 Fax number: .....

E-mail address: marla@sunrisesolarllc.com

ZBA action requested for (See §295-146B & C : ☐ Use Variance/s; ☐ Area Variance/s; ☐ Interpretation; ■ View Preservation (See §295-82)

List code sections & provisions from which the variance or interpretation is requested:

Section*	Code Provision*	Existing Condition*	Proposed Condition*
N/A	N/A	N/A	N/A

*See example below:

295-68F.1a	Front Yard Min. 30 ft. deep	26.5 ft	19.5 ft
295-68A	Permitted Principal Use.	Single Family Home	Conversion to Dental Office

VILLAGE OF HASTINGS-ON-HUDSON

Zoning Board of Appeals
Zoning Analysis

ZONING REQUIREMENTS:

YARD SETBACKS (Principal Structure)

	REQUIRED	EXISTING	PROPOSED
FRONT	N/A	N/A	N/A
REAR			
SIDE ONE			
SIDE TWO			
TOTAL OF TWO SIDES			

YARD SETBACKS (Accessory Structure)

	REQUIRED	EXISTING	PROPOSED
TO PRINCIPAL BLDG.	N/A	N/A	N/A
REAR			
SIDE			

BUILDING HEIGHT

	PERMITTED	EXISTING	PROPOSED
STORIES	N/A	N/A	N/A
FEET			

LOT COVERAGE

	PERMITTED	EXISTING	PROPOSED
LOT AREA	N/A	N/A	N/A
BLDG. COVERAGE/ % OF LOT AREA			
DEVELOPMENT COVERAGE / % OF LOT AREA			

*See Definitions of Building and Development Coverage in Section 295-5 of the Village code.

OCCUPANCY AND USE

	PERMITTED	EXISTING	PROPOSED
CURRENT USE**	SINGLE FAMILY	SINGLE FAMILY	SINGLE FAMILY

** Single Family, Two Family, Commercial, Mixed Use etc.

VILLAGE OF HASTINGS-ON-HUDSON

Zoning Board of Appeals

Application and Procedure for Application for Variance/Interpretation/View Preservation

- List any previous application or appeal filed with The Zoning Board of Appeals for this premises:

Date of Appeal	Purpose of the Appeal	Resolution if any	Date of Action
N/A			

- List pending violations on this property if any:

N/A

- Is there an approved site plan for this property?: ☐ (Yes) ☐ (No)
- Is there an Accessory Apartment at this property?: ☐ (Yes) ■ (No)
- Does this property have Boarder's Permit?: ☐ (Yes) ☒ (No)
- On a separate typewritten sheet of paper, state the principal points on which you are making this application. Describe the construction, addition or alteration that requires the variance. Explain why a variance is necessary and demonstrate how the variance satisfies the criteria for the type of variance (use or area) sought. The criteria for the two types of variances are attached. (If an interpretation is sought, explain the issue. If you wish you may also state your argument for how the issue should be resolved.)

Site preservation ONLY - installation of solar panels on roof of residence.

Submit a flash drive and a total of three (3) copies (residential) or eight (8) copies (commercial), of the application along with the property survey showing the existing and proposed construction and all other supporting documents (plans, drawings, site maps, photographs, etc. as necessary to describe and support your application) with required fee, to the Office of the Building Inspector, no less than four (4) weeks prior to the date of scheduled meeting of the Zoning Board of Appeals.

STATE OF NEW YORK
COUNTY OF WESTCHESTER ss.:

I hereby depose and say that all of the above statements and statements contained in all papers I have submitted in connection with this application are true:

Applicant

Sworn to before me this 22 day of June, 2017

LEE STREISFELD-LEITNER
Notary Public, State of New York
Reg. No. 01ST6347062
Qualified in Westchester County
My Commission Expires 8/29/2020

Notary Public

VILLAGE OF HASTINGS-ON-HUDSON

Zoning Board of Appeals

Application and Procedure for Application for Variance/Interpretation/View Preservation

STATE OF NEW YORK COUNTY OF
WESTCHESTER VILLAGE OF
HASTINGS ON HUDSON

Name : Debra Cantor, being duly sworn, deposes and says that he/she resides at 9 Ridge Street in the Village of Hastings-on-Hudson in the County of Westchester, in the State of New York, that he/she is the owner of all that certain lot, parcel of land, in fee, lying and being in the Village of Hastings-on-Hudson aforesaid and known and designated as Sheet 4.70 Block 52 and Lot 47.4 of the tax map, and that he/she hereby authorized Sunrise Solar Solutions, LLC to make the annexed application in his/her behalf and that the statement of fact contained in said application are true.

Owner

SWORN TO BEFORE ME THIS 22 DAY
OF June 20 17

Notary Public

LEE STREISFELD-LEITNER
Notary Public, State of New York
Reg. No. 01ST6347062
Qualified in Westchester County
My Commission Expires 8/29/2020

NOTICE

This application will not be accepted for filing unless accompanied by all necessary papers, plans and data, in accordance with the foregoing and as required by law.

Sunrise Solar SOLUTIONS

914.762.7622
www.sunrisesolarllc.com

Cantor Residence
9 Ridge Street
Hastings-on-Hudson, NY 10706

MEMO TO: Village of Hastings-on-Hudson Zoning Board of Appeals

This application to the Zoning Board of Appeals is for a variance for view preservation only for this residence to allow Sunrise Solar Solutions to install solar panels on the roof of said residence.

Yours truly,

Sunrise Solar Solutions, LLC