ExxonMobil
Refining & Supply

38 Varick Street
Brooklyn, New York 11222
Telephone: (718) 404-0652
Facsimile: (718) 404-0681
steve.p.trifiletti@exxonmobil.com

Steve P. Trifiletti
Project Manager

Ms. Sarah Saucier
Project Manager
New York State Department of Environmental Conservation
Division of Environmental Remediation, Remediation Bureau C
625 Broadway, 11th Floor
Albany, New York 12233-7014

March 8, 2016

RE: Site Management Plan
Former Tappan Terminal, Western Parcel, AOC 1
Hastings on Hudson, Westchester County, New York
Site No. 3-60-015A

Dear Ms. Saucier:

In accordance with your letter of February 10, 2016 that approved the Site Management Plan (SMP) for AOC1 at the Western Parcel of the Tappan Terminal Site in Hastings-on-Hudson, New York, enclosed are one paper copy and one electronic copy of the stamped and signed SMP with the executed Environmental Easement included in Appendix B of the document.

Please contact me at (718) 404-0652 with any questions or comments, and thank you for your time and assistance.

Sincerely,

S.P. Trifiletti

Steve P. Trifiletti
Project Manager

Electronic Copy: J. Nealon, M. Schuck, C. Westerman – NYSDOH, Troy, NY
E. Moore – NYSDEC, Region 3
A. Torrant – ExxonMobil, Houston, TX
M. Stella, R. Malinoski – Chevron, TX
M. DeMaio – Uhlich
G. Merritt – Fitzpatrick & Merritt
W. McCune – Arcadis, Syracuse, NY
A. Proctor, N. Hastings – W&C, Cheshire, CT

Former Tappan Terminal, AOC1

Former Mobil Terminal Property
Village of Hastings-on-Hudson, Westchester County, NEW YORK

Site Management Plan

NYSDEC Site Number: 3-60-015

Prepared for:
ExxonMobil Oil Corporation
38 Varick Street
Brooklyn, NY 11222

Prepared by:
Woodard & Curran
1520 Highland Avenue
Cheshire, CT 06410

Revisions to Final Approved Site Management Plan:

Revision #	Submitted Date	Summary of Revision	DEC Approval Date
1	1/6/2016	Per NYSDEC comments of 11/9/2015.	2/10/2016

March 2016

TABLE OF CONTENTS

CERTIFICATION ..... **v**

1.0 INTRODUCTION AND DESCRIPTION OF REMEDIAL PROGRAM **1**

1.1 INTRODUCTION **1**

1.1.1 General 1
1.1.2 Purpose 2
1.1.3 Revisions 3

1.2 SITE BACKGROUND **3**

1.2.1 Site Location and Description 4
1.2.2 Site History 4
1.2.3 Geologic Conditions 6

1.3 SUMMARY OF REMEDIAL INVESTIGATION FINDINGS **7**

1.4 SUMMARY OF REMEDIAL ACTIONS **9**

1.4.1 Removal of Contaminated Materials from the Site 11
1.4.2 Site-Related Treatment Systems 12
1.4.3 Remaining Contamination 12

2.0 ENGINEERING AND INSTITUTIONAL CONTROL PLAN **13**

2.1 INTRODUCTION **13**

2.1.1 General 13
2.1.2 Purpose 13

2.2 ENGINEERING CONTROLS **14**

2.3 INSTITUTIONAL CONTROLS **14**

2.3.1 Excavation Work Plan (EWP) 16
2.3.2 Soil Vapor Intrusion Evaluation 17

2.4 INSPECTIONS AND NOTIFICATIONS **17**

2.4.1 Inspections 17
2.4.2 Notifications 18

TABLE OF CONTENTS

CERTIFICATION ..... **v**

1.0 INTRODUCTION AND DESCRIPTION OF REMEDIAL PROGRAM **1**

1.1 INTRODUCTION **1**

1.1.1 General 1
1.1.2 Purpose 2
1.1.3 Revisions 3

1.2 SITE BACKGROUND **3**

1.2.1 Site Location and Description 4
1.2.2 Site History 4
1.2.3 Geologic Conditions 6

1.3 SUMMARY OF REMEDIAL INVESTIGATION FINDINGS **7**

1.4 SUMMARY OF REMEDIAL ACTIONS **9**

1.4.1 Removal of Contaminated Materials from the Site 11
1.4.2 Site-Related Treatment Systems 12
1.4.3 Remaining Contamination 12

2.0 ENGINEERING AND INSTITUTIONAL CONTROL PLAN **13**

2.1 INTRODUCTION **13**

2.1.1 General 13
2.1.2 Purpose 13

2.2 ENGINEERING CONTROLS **14**

2.3 INSTITUTIONAL CONTROLS **14**

2.3.1 Excavation Work Plan (EWP) 16
2.3.2 Soil Vapor Intrusion Evaluation 17

2.4 INSPECTIONS AND NOTIFICATIONS **17**

2.4.1 Inspections 17
2.4.2 Notifications 18

2.5 CONTINGENCY PLAN 19

2.5.1 Emergency Telephone Numbers 20
2.5.2 Map and Directions to Nearest Health Facility 20
2.5.3 Response Procedures 21

3.0 SITE MONITORING PLAN 23

3.1 INTRODUCTION 23

3.1.1 General 23
3.1.2 Purpose and Schedule 23

3.2 SOIL COVER SYSTEM AND SITE-WIDE INSPECTION 24

3.3 AOC3 MONITORING PROGRAM 24

3.4 MONITORING QUALITY ASSURANCE/QUALITY CONTROL 26

3.5 INSPECTION/MONITORING REPORTING REQUIREMENTS 27

4.0 OPERATION AND MAINTENANCE PLAN 29

4.1 INTRODUCTION - AOC3 GROUNDWATER REMEDIATION SYSTEM 29

4.2 AOC3 ENGINEERING CONTROL SYSTEM OPERATION AND MAINTENANCE 30

4.3 AOC3 ENGINEERING CONTROL SYSTEM PERFORMANCE MONITORING 30

4.4 AOC3 MAINTENANCE AND PERFORMANCE MONITORING REPORTING REQUIREMENTS 30

4.4.1 Routine Maintenance Reports 30
4.4.2 Non-Routine Maintenance Reports 31

5.0 INSPECTIONS, REPORTING AND CERTIFICATIONS 32

5.1 SITE INSPECTIONS 32

5.1.1 Inspection Frequency 32
5.1.2 Inspection Forms, Sampling Data, and Maintenance Reports 32
5.1.3 Evaluation of Records and Reporting 32

5.2 CERTIFICATION OF ENGINEERING AND INSTITUTIONAL CONTROLS 32

5.3 PERIODIC REVIEW REPORT 34

5.4 CORRECTIVE MEASURES PLAN 35

LIST OF TABLES

1. Remedial Investigation Soil and Groundwater Contamination Summary (*"Nature and Extent of Contamination" from 2006 Record of Decision*)
2. Summary of Remaining Soil Contamination Above Unrestricted Levels
3. Criteria for On-site Reuse of Excavated Materials or Imported Soils
4. Emergency and Other Contact Numbers (*embedded*)
5. AOC3 Groundwater Monitoring Schedule (*embedded*)
6. Monitoring/Inspection and Reporting Schedule (*embedded*)

LIST OF FIGURES

1: Site Location Map

2: Site Plan and Boundaries

3: Geologic Cross section(s)

4: Remedial Investigation Soil Contamination Summary

5: Remedial Investigation Groundwater Contamination Summary *("Chlorobenzene Concentrations in Groundwater" from 2006 Record of Decision*)

6: Extent of Remedial Excavation Performed and Location of Remaining Soil Contamination Above Unrestricted Levels

7: Remaining Groundwater Contamination Above Action Levels *(Figure 4 from the Baseline Groundwater Monitoring Report for AOC3 by Arcadis of New York, Inc. dated July 12, 2013; Baseline Post-Remediation Groundwater Quality is not available as of this writing.*

8: Map Showing Route from the Site to the Hospital (*embedded*)

LIST OF APPENDICES

A: Metes and Bounds

B: Environmental Easement

C: Soil Cover System As-Built Drawings

D: Excavation Work Plan

E: Health and Safety Plan and Community Air Monitoring Plan

F: Site Inspection Form – Open Space

G: Groundwater Remedial System Final Design Report

H: Well Construction Information

I: Quality Assurance Project Plan

J: Groundwater Remedial System OMM Manual

CERTIFICATION

I, Anne E. Proctor, PE, certify that I am currently a registered professional engineer licensed by the State of New York and that this Site Management Plan was prepared in accordance with all applicable statutes and regulations and in substantial conformance with the DER Technical Guidance for Site Investigation and Remediation (DER-10) and that all activities were performed in full accordance with the DER-approved work plan and any DER-approved modifications.

NYS Professional Engineer #	Date	Signature
070786	3/8/2016	Anne E. Proctor

STATE OF NEW YORK
ANNE E. PROCTOR
070786
LICENSED PROFESSIONAL ENGINEER

SITE MANAGEMENT PLAN

1.0 INTRODUCTION AND DESCRIPTION OF REMEDIAL PROGRAM

1.1 INTRODUCTION

This document is required as an element of the remedial program at The Former Mobil Terminal Property (Former Tappan Terminal AOC1, hereinafter referred to as the "Site") under the New York State (NYS) Inactive Hazardous Waste Disposal Site Remedial Program administered by New York State Department of Environmental Conservation (NYSDEC). The Site was remediated in accordance with Order on Consent No. A3-0612-1208 which was executed on March 14, 2010.

1.1.1 General

ExxonMobil Oil Corporation (ExxonMobil) entered into an Order on Consent with the NYSDEC to remediate an 8.088 acre property located in the Village of Hastings-on-Hudson, Westchester County, New York. This Order on Consent required the Remedial Party, ExxonMobil, to investigate and remediate contaminated media at the Site. A figure showing the Site location and boundaries of this 8.088-acre Site subject to this plan is provided in Figure 1. The boundaries of the Site are more fully described in the metes and bounds Site description that is (or will be) part of the Environmental Easement (Appendices A and B).

After completion of the remedial work described in the Remedial Action Work Plan, some contamination was left in the subsurface at this Site, which is hereafter referred to as 'remaining contamination." This Site Management Plan (SMP) was prepared to manage remaining contamination at the Site until the Environmental Easement is extinguished in accordance with ECL Article 71, Title 36. All reports associated with the Site can be viewed by contacting the NYSDEC or its successor agency managing environmental issues in New York State.

This SMP was prepared by Woodard & Curran, on behalf of ExxonMobil, in accordance

with the requirements in NYSDEC DER-10 Technical Guidance for Site Investigation and Remediation dated May 2010, Record of Decision, dated September 2006, and the guidelines provided by NYSDEC. This SMP addresses the means for implementing the Institutional Controls (ICs) and Engineering Controls (ECs) that are required by the Environmental Easement for the Site.

1.1.2 Purpose

The Site contains contamination left after completion of the remedial action. Engineering Controls have been incorporated into the Site remedy to control exposure to remaining contamination during the use of the Site to ensure protection of public health and the environment. An Environmental Easement granted to the NYSDEC, and recorded with the Westchester County Clerk, will require compliance with this SMP and all ECs and ICs placed on the Site. The ICs place restrictions on Site use, and mandate operation, maintenance, monitoring and reporting measures for all ECs and ICs. This SMP specifies the methods necessary to ensure compliance with all ECs and ICs required by the Environmental Easement for contamination that remains at the Site. This plan has been approved by the NYSDEC, and compliance with this plan is required by the grantor of the Environmental Easement and the grantor's successors and assigns. This SMP may only be revised with the approval of the NYSDEC.

This SMP provides a detailed description of all procedures required to manage remaining contamination at the Site after completion of the Remedial Action, including: (1) implementation and management of all Engineering and Institutional Controls; (2) media monitoring; and (3) performance of periodic inspections, certification of results, and submittal of Periodic Review Reports. To address these needs, this SMP includes an Engineering and Institutional Control Plan for implementation and management of EC/ICs and a Monitoring Plan for implementation of Site Monitoring.

This plan also includes a description of Periodic Review Reports for the periodic submittal of data, information, recommendations, and certifications to NYSDEC.

It is important to note that:

- This SMP details the site-specific implementation procedures that are required by the Environmental Easement. Failure to properly implement the SMP is a violation of the environmental easement, which is grounds for revocation of the Certificate of Completion (COC);

- Failure to comply with this SMP is also a violation of Environmental Conservation Law, 6NYCRR Part 375 and the Order on Consent No. A3-0612-1208 for the Site, and thereby subject to applicable penalties.

1.1.3 Revisions

Revisions to this plan will be proposed in writing to the NYSDEC's project manager. In accordance with the Environmental Easement for the Site, the NYSDEC will provide a notice of any approved changes to the SMP, and append these notices to the SMP that is retained in its files.

1.2 SITE BACKGROUND

The former Mobil terminal property is approximately 9.298 acres and part of the larger Tappan Terminal site, located on 15 acres along the Hudson River waterfront in the Village of Hastings-on-Hudson, Westchester County, New York. The Tappan Terminal is comprised of two properties, the former Mobil terminal property (the Western Parcel, herein referred to as the "Site" and also identified as AOC1 in the Order on Consent), which is located adjacent to the Hudson River (the subject of this SMP), and the former Uhlich Color Company property (the Eastern Parcel and also identified as AOC2 in the Order on Consent), which is located along the railroad tracks that define the eastern boundary of the Site (not included in this SMP).

Of the 9.298 acres that comprise AOC1, the former Mobil terminal property, approximately 1.21 acres are riparian land in the Hudson River; the remaining 8.088 acres of dry land are subject of this SMP. **Figure 1** shows the location of the Site, and **Figure 2** shows the boundaries and main features of the Western Parcel.

AOC3 is defined as the site-wide groundwater and encompasses both properties, AOC1 and AOC2. While AOC3 is covered under a separate SMP, operation and monitoring

requirements (Sections 3.3 and 4.0) are included in this SMP for reference in the event that these tasks transfer to this SMP.

The Site was used as a petroleum distribution terminal from 1961 until Mobil ceased operations on the Site in 1985. The Site has remained vacant since that time. Mobil Oil Corporation (now ExxonMobil Oil Corporation) remains the Site owner. All former buildings and aboveground storage tanks have been removed from the Site. The Site is relatively flat, located on the eastern shore of the Hudson River.

Remedial Activities were conducted and administered on behalf of ExxonMobil by Roux Associates and Woodard & Curran. The selected remedy for the Site included excavation and removal of soil that was grossly contaminated with weathered petroleum, removal of former piping and any other structures as necessary to allow adequate Site grading, and application of a Site cap including a demarcation layer and 24 inches of clean fill. Field work commenced in 2010 and was completed in 2013.

1.2.1 Site Location and Description

The Site is located in the Village of Hastings-on-Hudson, Westchester County, New York and is identified as Section 4.100, Block 93, Lot 18 on the Town of Greenburgh Tax Map. The Site is an approximately 8.088-acre area bounded by the Harbor at Hastings Site Operable Unit 1 (former ARCO facility) to the north, the Pioneer Boat Club to the south, riparian parcels (1.21 acres) and the Hudson River to the east, and the Former Tappan Terminal AOC2 (the former Uhlich facility) to the west (see Figure 1). The boundaries of the Site are more fully described in the Environmental Easement.

1.2.2 Site History

The Tappan Terminal has a long history of manufacturing and chemical use by several owners and occupants. The landmass of the Site itself was created by disposal of manmade fill into the Hudson River between 1868 and 1970. This fill material typically consisted of sand and gravel mixed with bricks, concrete, stone, timber, ash, slag, shells, and other debris. The history is summarized below:

1868: The site comprises two acres at the northern end of the current site.

1897-1955: The site was owned by Zinsser & Company for the manufacture of dyes, pigments and photographic chemicals.

1920: Filling progressed to the current Uhlich / ExxonMobil property line.

1955-1961: Harshaw purchased the Zinsser Company and continued operations at the site.

1961-1971: Tappan Tanker Terminal purchased the property and began operating a petroleum distribution facility on the western portion of the site. During this period, waste chemicals were stored on the western portion of the site prior to open ocean disposal.

1964-2002: Paul Uhlich & Company leased, then purchased, the eastern portion of the site for the manufacture of pigments. This operation later became the Uhlich Color Company. The site layout during the recent operational period is shown on Figure 3 in the September 2006 Record of Decision.

1975-1985: Mobil Oil Co. purchased the western portion of the site and continued petroleum distribution operations.

In addition to the site operators identified above, several corporate mergers and acquisitions have occurred. The Harshaw Chemical Company was purchased by Kewanee Industries in 1966, which was acquired by the Gulf Oil Corporation in 1977. Gulf Oil Corporation merged with the Chevron Chemical Corporation in 1985. Mobil Oil Corporation merged with Exxon Corporation to form ExxonMobil in 1999.

The Uhlich Color Company ceased operations at the site in 2002, and most buildings at the site were demolished in early 2003.

Sampling various media at the site was performed between 1985 and 1989. In 1987, the NYSDEC listed the site as a Class 2 site in the Registry of Inactive Hazardous Waste Disposal Sites in New York. A Class 2 site is a site where hazardous waste presents a significant threat to the public health or the environment and action is required.

During a 1992 repair of a sewer pipe at the site, evidence of a petroleum release on both properties was discovered. Contaminated soil was stockpiled and later sent off site for disposal. The extent of petroleum contamination was investigated between 1992 and 1994. In 1994, an oil remediation plan was approved by the NYSDEC, and Mobil and Uhlich entered into a Stipulation Agreement to remediate this spill.

In 1996 Mobil entered into a Voluntary Agreement with the NYSDEC to investigate petroleum contamination on the western portion of the site. Because none of the potentially responsible parties agreed to perform a comprehensive investigation of the entire site, the site was referred for a State-funded investigation in 1998. However, after 1998 Mobil conducted some focused investigations and pilot studies on contamination located on their portion of the site.

The Tappan Terminal site was the subject of a Record of Decision (ROD) issued by the NYSDEC Division of Environmental Remediation on September 8, 2006. The ROD addressed both the Mobil and Uhlich properties. This site management plan addresses only issues on the ExxonMobil property of the Tappan Terminal site 360015A (AOC1).

The NYSDEC issued Order on Consent No. A3-0612-1208 effective March 14, 2010.

1.2.3 Geologic Conditions

The Tappan Terminal property is underlain by four geologic units, the upper fill layer, the Marine Grey Silt, the Basal Sand unit, and bedrock. The upper fill layer ranges from 11 to 32 feet in thickness, and consists of sand, silt and gravel variably mixed with ash, slag, glass, metal debris, wood, crushed stone, paper, coal, sawdust and brick fragments. This material is typical of historic waterfront fill material deposited during the late 19th and early 20th centuries. The historic fill is considered to be relatively permeable; however, intermediate bulkheads were built in stages along the shoreline as filling proceeded. These bulkheads are now buried beneath the property, and in some places act to restrict the flow of groundwater towards the river.

Groundwater flows through the fill layer from east to west and discharges to the Hudson River, subject to the tide stage of the river. At high tide, the groundwater flow direction

reverses along the immediate shoreline and water enters the Site from the river. Generally, tidal fluctuations in the river affect groundwater levels within 100 feet of the shoreline. Site groundwater is generally 2 to 7 feet below grade.

Beneath the fill unit lies the Marine Grey Silt unit that represents the historic sediment of the Hudson River. This unit consists of grey to black silt with a trace of fine sand and layers of shell fragments. The Marine Grey Silt is at least 8 feet thick beneath the property, and ranges from 10 to 62 feet thick in the local area. The silt unit acts as a confining layer. This unit is believed to be continuous beneath the Site.

The Basal Sand Unit that underlies the silt layer consists of permeable, medium to coarse sands and gravels. Although this unit was not investigated at the Tappan Terminal site, measurements in the vicinity indicate that the Basal Sand Unit is a confined aquifer under artesian conditions. That is, groundwater pressure in the Basal Sand is greater than in the fill unit, and flow would be upward in the absence of the confining silt unit.

The underlying bedrock in the area is reported to be either Inwood Marble or Fordham Gneiss at 50 to 100 feet below grade.

Geologic sections and profiles are shown in Figure 3.

1.3 SUMMARY OF REMEDIAL INVESTIGATION FINDINGS

A Remedial Investigation (RI) was performed to characterize the nature and extent of contamination at the Site. The results of the RI are described in detail in the “Remedial Investigation Report, Tappan Terminal Site”; Dvirka and Bartilucci Consulting Engineers; Syracuse, NY; September 1999.

Generally, the RI determined that the contaminants of concern included Semivolatile Organic Compounds (SVOCs), Total Petroleum Hydrocarbons (TPH), and metals: arsenic, beryllium, copper, mercury, nickel and zinc. The metals were found throughout the surface and subsurface fill, and are commonly associated with historic fill containing ash and furnace slag.

The potential exposure pathways for soil related to current use or development of the Site include:

- Inhalation of contaminated dust or vapors by workers during on-site excavation activities;
- Inhalation of contaminated vapors in indoor air by future occupants of buildings that may be constructed on the Site;
- Incidental ingestion of contaminated soil by on-site workers or recreational users of the Site;
- Dermal contact with contaminated soil by workers or recreation users; and
- Exposure of wildlife to contaminants in Site surface soils.

Below is a summary of Site conditions when the RI was performed in 1998 and 1999:

Soil (Refer to Table 1 and Figure 4)

In AOC1, levels of SVOCs were generally lower in subsurface soils than in surface soils with one notable exception at location SB-3, on the Mobil property, where a thick, oil-like material was encountered that exhibited a strong petroleum odor. Samples from that location contained many tentatively identified compounds (TICs) that were identified generally as hydrocarbon SVOCs, which is consistent with the presence of a residual petroleum product.

PCBs were found to slightly exceed the1 ppm cleanup guideline in 8 surface soil samples, mostly located along the Harbor at Hastings site boundary and the access road that formerly connected the properties. The highest detected concentration was 5 ppm of combined Aroclors 1254 and 1260at a location along the Harbor at Hastings property boundary.

The volatile organic compounds (VOCs) of concern in soils were all found in subsurface soil samples. These include chlorobenzene, which was found centrally to the Former Tappan Terminal eastern/western (Mobil/Uhlich) properties at a maximum value of 31 ppm, compared to its cleanup guideline of 1.7 ppm.

Throughout the Site, beryllium, copper, mercury and zinc were found at levels exceeding their cleanup guidelines in subsurface soil.

Groundwater (Refer to Table 1 and Figure 5)

The highest levels of chlorobenzene in groundwater were found near the suspected source area along the abandoned sewer line that runs along the approximate Mobil/Uhlich property line. In these areas, chlorobenzene was found at concentrations up to 11,000 ppb with a groundwater standard for chlorobenzene of 5 ppb.

Within the chlorobenzene plume, in the area of the abandoned sewer line, is an area of benzene groundwater contamination. In this area, concentrations range from 5 ppb to 170 ppb, compared to the SCG of 1 ppb. Also within the chlorobenzene plume are zones of naphthalene, chlorophenol, 4-chloroaniline, and dichlorobenzene contamination. The maximum levels of these contaminants are 650 ppb of naphthalene, 61 ppb of 2-chlorophenol, 25 ppb of 4-chloroaniline, and 170 ppb of 1,4-dichlorobenzene, compared to their SCGs of 10 ppb, 3 ppb, 5 ppb and 1 ppb, respectively.

Metal contaminants were found at greater frequencies and higher concentrations in unfiltered samples compared to filtered samples. This indicates that, to some degree, metals are present in particulate rather than dissolved form. Iron and manganese were found to exceed their SCGs in a high percentage (68% to 79%) of filtered samples taken from the Site. Barium, antimony and selenium were found to exceed their SCGs in 26% to 37% of filtered samples. Concentrations of lead and copper in only one well (OW-17) exceeded their SCGs. At this location, along the Mobil/Uhlich property line and sewer line, lead and copper were 261 ppb and 506 ppm, compared to their respective water quality standards of 25 ppb and 200 ppb.

1.4 SUMMARY OF REMEDIAL ACTIONS

The Site was remediated in accordance with the NYSDEC approved Remedial Design/Remedial Action Work Plan revised July 13, 2012, amended August 31, 2012 and approved with modifications on September 10, 2012. The following is a summary of the Remedial Actions performed per the selected remedy for the Site (Former Tappan Terminal

AOC1):

1. Excavation and removal of soil/fill that was grossly contaminated with weathered petroleum.

2. Removal of former piping and any other structures as necessary to allow adequate Site grading.

3. Construction and maintenance of a soil cover system to support re-vegetation and to prevent human exposure to remaining contaminated soil/fill remaining at the Site, consisting of:

- A demarcation layer and 24 inches of soil (23 to 50 inches actual) meeting the restricted-residential and ecological Soil Cleanup Objectives (SCOs), as appropriate; and

- An erosion protection berm along the shore at elevation 6 feet (5.9 to 6.7 feet actual).

Existing berms associated with the former terminal were intended to be removed and spread into low areas as part of the Site regrading process. Erosion control measures, including silt fencing and hay bales, were installed in preparation for Site work; however, a high tide inundated the silt fencing and hay bales. The existing berms were deemed beneficial to supplement erosion control for the Site, and NYSDEC requested that the existing berms be retained and incorporated into the cap to enhance erosion protection. Berms were made continuous at a nominal elevation of six feet and incorporated into the cover system.

4. Execution and recording of an Environmental Easement to restrict land use and prevent future exposure to any contamination remaining at the Site.

5. Institutional Controls including:

- The property may only be used for restricted-residential (which includes

commercial, light industrial, or recreational) use provided that the long-term Engineering and Institutional Controls included in this SMP are employed;

- All future activities on the property that will disturb remaining contaminated material must be conducted in accordance with this SMP;

- The use of the groundwater underlying the property is prohibited;

- Occupied subsurface structures and vaults are prohibited, and the potential for vapor intrusion must be evaluated for any buildings developed on-site and any potential impacts that are identified must be monitored or mitigated; and

- Vegetable gardens and farming on the property are prohibited.

6. Development and implementation of a Site Management Plan for long term management of remaining contamination as required by the Environmental Easement, which includes plans for: (1) Institutional and Engineering Controls, (2) monitoring, (3) inspections, (4) maintenance and (5) reporting.

Remedial activities were completed at the Site in 2013. *Note: AOC3, groundwater remediation, will be conducted under a separate SMP; refer to Section 1.2.*

1.4.1 Removal of Contaminated Materials from the Site

Approximately 950 cubic yards of grossly contaminated soil as determined by field and laboratory screening were removed from the AOC1 excavation area near well OW-5A (refer to Figure 6). All soil confirmation samples were in compliance with the ROD-specific criterion for Total SVOCs of 500 ppm, with results ranging from 0.57 to 53 ppm Total SVOCs. Various miscellaneous items were removed from the Site in preparation of the final remedy and future redevelopment. Removal of derelict boats related to the former Pioneer Boat Club south of the Site was completed. Demolition of the former terminal dock was completed. Two roll-offs of scrap metal for recycling were removed.

1.4.2 Site-Related Treatment Systems

AOC3 includes a treatment system for groundwater as part of the Former Tappan Terminal site remedy and will be addressed by a separate SMP (refer to Section 4.0).

1.4.3 Remaining Contamination

Soil confirmation samples taken at the excavation area were in compliance with the ROD-specific criterion for Total SVOCs of 500 ppm, and results ranged from 0.57 to 53 ppm Total SVOCs.

The Site was overlain by a two foot cap with filter fabric and concrete pads at an approximate depth of two feet or more below grade that demark the bottom of the cap and location of Site material that may potentially be impacted (refer to Figure 2 and Appendix C).

The selected remedy for the Site included excavation and removal of soil that was grossly contaminated with weathered petroleum as measured by a shake test or soil that contained in excess of the site-specific criterion established in the ROD of 500 ppm Total SVOCs+TICs. Remedial actions were conducted in the vicinity of well OW-5A as summarized in Table 2 and shown on Figure 6. This area also contains a 42” diameter storm sewer pipe (also depicted on Figure 6 and refer to Figure 2).

The future construction of clean utility corridors during any site development will follow the Excavation Work Plan (EWP, Appendix D). The clean utility corridors will be constructed such that the demarcation layer will be placed a minimum of 1 foot below (vertically) the respective utilities to minimize the potential for worker exposure and damage to the cover system. The lateral distance to the demarcation layer will be determined by the type and size of the utility to allow any future maintenance work in a way that minimizes the potential for worker exposure and damage to the cover system. The utility corridors will have soil or clean material meeting the unrestricted soil cleanup objectives (refer to Table 3).

Figures 6 and 7 summarize the results of all soil and groundwater samples remaining at the site after completion of Remedial Action that exceed the Track 1 (unrestricted) SCOs or Action Levels, respectively.

2.0 ENGINEERING AND INSTITUTIONAL CONTROL PLAN

2.1 INTRODUCTION

2.1.1 General

Since remaining contaminated soil and groundwater/soil vapor exists beneath the Site, Engineering Controls and Institutional Controls (EC/ICs) are required to protect human health and the environment. This Engineering and Institutional Control Plan describes the procedures for the implementation and management of all EC/ICs at the Site. The EC/IC Plan is one component of the SMP and is subject to revision by NYSDEC.

2.1.2 Purpose

This plan provides:

- A description of all EC/ICs on the Site;
- The basic implementation and intended role of each EC/IC;
- A description of the key components of the ICs set forth in the Environmental Easement;
- A description of the features to be evaluated during each required inspection and periodic review;
- A description of plans and procedures to be followed for implementation of EC/ICs, such as the implementation of the EWP (Appendix D) for the proper handling of remaining contamination that may be disturbed during maintenance or redevelopment work on the Site; and
- Any other provisions necessary to identify or establish methods for implementing the EC/ICs required by the Site remedy, as determined by the NYSDEC.

2.2 ENGINEERING CONTROLS

Exposure to remaining contamination in soil/fill at the Site is prevented by a soil cover system placed over the Site. This cover system is comprised of a minimum of 24 +/- 2 inches (23 to 50 inches actual) of soil, and an erosion protection berm along the shore with the top 2 feet of stone choked with soil at an elevation of approximately 6 feet (5.9 to 6.7 feet actual), meeting the restricted-residential and ecological Soil Cleanup Objectives (SCOs), as appropriate and as indicated on Figure 2. The EWP that appears in Appendix D outlines the procedures required to be implemented in the event the cover system is breached, penetrated or temporarily removed, and any underlying remaining contamination is disturbed. Procedures for the inspection and maintenance of this cover are provided in the Monitoring Plan included in Section 4 of this SMP.

The composite cover system is a permanent control and the quality and integrity of this system will be inspected at defined, regular intervals in perpetuity.

2.3 INSTITUTIONAL CONTROLS

A series of Institutional Controls is required by the ROD to: (1) implement, maintain and monitor Engineering Control systems; (2) prevent future exposure to remaining contamination by controlling disturbances of the subsurface contamination; and, (3) limit the use and development of the Site to restricted-residential uses (which includes commercial, light industrial, or recreational) only. Adherence to these Institutional Controls on the Site is required by the Environmental Easement and will be implemented under this Site Management Plan. These Institutional Controls are:

- Compliance with the Environmental Easement and this SMP by the Grantor and the Grantor's successors and assigns;
- All Engineering Controls must be maintained as specified in this SMP;
- All Engineering Controls on the Controlled Property must be inspected at a frequency and in a manner defined in the SMP.

- Data and information pertinent to Site Management of the Controlled Property must be reported at the frequency and in a manner defined in this SMP;

Institutional Controls identified in the Environmental Easement may not be discontinued without an amendment to or extinguishment of the Environmental Easement.

The Site has a series of Institutional Controls in the form of Site restrictions. Adherence to these Institutional Controls is required by the Environmental Easement. Site restrictions that apply to the Controlled Property are:

- The property may only be used for restricted-residential (which includes commercial, light industrial, or recreational) use provided that the long-term Engineering and Institutional Controls included in this SMP are employed.

- The property may not be used for a higher level of use, such as unrestricted use without additional remediation and amendment of the Environmental Easement, as approved by the NYSDEC;

- All future activities on the property that will disturb remaining contaminated material must be conducted in accordance with this SMP;

- The use of the groundwater underlying the property is prohibited without treatment rendering it safe for intended use;

- The potential for vapor intrusion must be evaluated for any buildings developed on-site and any potential impacts that are identified must be monitored or mitigated; and

- Vegetable gardens and farming on the property are prohibited.

The Site owner or remedial party will submit to NYSDEC a written statement that certifies, under penalty of perjury, that: (1) controls employed at the Controlled Property are unchanged from the previous certification or that any changes to the controls were approved by the NYSDEC; and, (2) nothing has occurred that impairs the ability of the controls to protect

public health and environment or that constitute a violation or failure to comply with the SMP.

NYSDEC retains the right to access such Controlled Property at any time in order to evaluate the continued maintenance of any and all controls. This certification shall be submitted annually, or an alternate period of time that NYSDEC may allow and will be made by an expert that the NYSDEC finds acceptable.

2.3.1 Excavation Work Plan (EWP)

The Site will be remediated for restricted-residential use. Any future intrusive work that will penetrate the soil cover or cap, or encounter or disturb the remaining contamination, including activities associated with redevelopment (i.e., site improvements, installation of utilities and utility corridors), and any modifications or repairs to the existing cover system will be performed in compliance with the EWP that is attached as Appendix D to this SMP. Any work conducted pursuant to the EWP must also be conducted in accordance with the procedures defined in a Health and Safety Plan (HASP) and Community Air Monitoring Plan (CAMP) prepared for the Site that is in current compliance with DER-10, and 29 CFR 1910, 29 CFR 1926, and all other applicable Federal, State and local regulations. Based on future changes to State and federal health and safety requirements, and specific methods employed by future contractors, the HASP and CAMP will be updated and re-submitted with the notification provided in Section A-1 of the EWP. Any intrusive construction work will be performed in compliance with the EWP, HASP and CAMP, and will be included in the periodic inspection and certification reports submitted under the Site Management Reporting Plan (See Section 5).

The Site owner and associated parties preparing the remedial documents submitted to the State, and parties performing this work, are completely responsible for the safe performance of all intrusive work, the structural integrity of excavations, proper disposal of excavation de-water, control of runoff from open excavations into remaining contamination, and for structures that may be affected by excavations (such as building foundations and bridge footings). The Site owner will ensure that Site development activities will not interfere with, or otherwise impair or compromise, the engineering controls described in this SMP.

2.3.2 Soil Vapor Intrusion Evaluation

Prior to the construction of any enclosed structures on-site, an SVI evaluation will be performed to determine whether any mitigation measures are necessary to eliminate potential exposure to vapors in the proposed structure. Alternatively, an SVI mitigation system may be installed as an element of the building foundation without first conducting an investigation. This mitigation system will include a vapor barrier and passive sub-slab depressurization system that is capable of being converted to an active system.

Prior to conducting an SVI investigation or installing a mitigation system, a work plan will be developed and submitted to the NYSDEC and NYSDOH for approval. This work plan will be developed in accordance with the most recent NYSDOH "Guidance for Evaluating Vapor Intrusion in the State of New York". Measures to be employed to mitigate potential vapor intrusion will be evaluated, selected, designed, installed, and maintained based on the SVI evaluation, the NYSDOH guidance, and construction details of the proposed structure.

Preliminary (unvalidated) SVI sampling data will be forwarded to the NYSDEC and NYSDOH for initial review and interpretation. Upon validation, the final data will be transmitted to the agencies, along with a recommendation for follow-up action, such as mitigation. If the property is owned by a third party, validated SVI data will be transmitted to the property owner within 30 days of validation. If any indoor air test results exceed NYSDOH guidelines, relevant NYSDOH fact sheets will be provided to all tenants of the property within 15 days of receipt of validated data. SVI sampling results, evaluations, and follow-up actions will also be summarized in the next Periodic Review Report.

2.4 INSPECTIONS AND NOTIFICATIONS

2.4.1 Inspections

Inspections of all remedial components installed at the Site will be conducted at the frequency specified in the SMP Monitoring Plan schedule. A comprehensive site-wide inspection will be conducted annually, regardless of the frequency of the Periodic Review

Report. The inspections will determine and document the following:

- Whether Engineering Controls continue to perform as designed;
- If these controls continue to be protective of human health and the environment;
- Compliance with requirements of this SMP and the Environmental Easement;
- If Site records are complete and up to date; and
- Changes, or needed changes, to the remedial or monitoring systems and/or reporting.

Inspections will be conducted in accordance with the procedures set forth in the Monitoring Plan of this SMP (Section 3). The reporting requirements are outlined in the Periodic Review Reporting section of this plan (Section 5).

If an emergency, such as a natural disaster or an unforeseen failure of any of the ECs occurs, an inspection of the Site will be conducted within 5 days of the event to verify the effectiveness of the EC/ICs implemented at the Site by a qualified environmental professional as determined by NYSDEC.

2.4.2 Notifications

Notifications will be submitted by the property owner to the NYSDEC as needed for the following reasons:

- 60-day advance notice of any proposed changes in Site use that are required under the terms of the Order on Consent, 6NYCRR Part 375, and/or Environmental Conservation Law.

- At least 15-day advance notice of any proposed ground-intrusive activities pursuant to the EWP (refer to Appendix D).

- Notice within 48-hours of any damage or defect that reduces or has the potential to reduce the effectiveness of Engineering Controls and likewise any action to be taken to mitigate the damage or defect.

- Verbal notice by noon of the following day of any emergency, such as a fire, flood, or earthquake that reduces or has the potential to reduce the effectiveness of Engineering Controls in place at the Site, with written confirmation within 7 days that includes a summary of actions taken, or to be taken, and the potential impact to the environment and the public.

- Follow-up status reports on actions taken to respond to any emergency event requiring ongoing responsive action shall be submitted to the NYSDEC within 45 days and shall describe and document actions taken to restore the effectiveness of the ECs.

Any change in the ownership of the Site or the responsibility for implementing this SMP will include the following notifications:

- At least 60 days prior to the change, the NYSDEC will be notified in writing of the proposed change. This will include a certification that the prospective purchaser has been provided with a copy of the Order on Consent and all approved work plans and reports, including this SMP

- Within 15 days after the transfer of all or part of the Site, the new owner's name, contact representative, and contact information will be confirmed in writing.

- The following site management related documentation, up to the point of transfer, will be provided to the new owner: a copy of the approved SMP with any updates, all previously approved Periodic Review Reports, and the Institutional Control/Engineering Control certification that was provided by the Department to be completed for the next scheduled periodic review.

2.5 CONTINGENCY PLAN

Emergencies may include injury to personnel, fire or explosion, environmental release, or serious weather conditions.

2.5.1 Emergency Telephone Numbers

In the event of any environmentally related situation or unplanned occurrence requiring assistance the Owner or Owner's representative(s) should contact the appropriate party from the contact list below. For emergencies, appropriate emergency response personnel should be contacted. Prompt contact should also be made to [qualified environmental professional]. These emergency contact lists must be maintained in an easily accessible location at the Site.

Table 4: Emergency and Other Contact Numbers

Medical, Fire, and Police:	(914) 478-2344*
One Call Center: (3 day notice required for utility markout)	(800) 272-4480
Poison Control Center:	(800) 222-1222
Pollution Toxic Chemical Oil Spills:	(800) 424-8802
NYSDEC Spills Hotline	(800) 457-7362
Local, Non-emergency: Village of Hastings-on-Hudson	(914) 478-3400
Owner – Eastern Parcel (AOC2): Uhlich Color Company, Inc.	(845) 928-3234
Other Remedial Party (AOC2/3): Chevron Environmental Management Co.	(713) 432-2643
Owner – Western Parcel (AOC1): ExxonMobil Oil Corporation.	(718) 404-0652
Qualified Professionals: Woodard & Curran	(203) 271-0379

**** Note: 911 call may be directed to NJ; in case of emergency, call local police department directly.***

2.5.2 Map and Directions to Nearest Health Facility

Site Location: Former Tappan Terminal in Hastings-on-Hudson, NY

Vehicular Access from River Street (Map Location A)

Nearest Hospital Name: St. John's Riverside Hospital – Andrus Pavilion

Hospital Location: 967 North Broadway, Yonkers, NY (Map Location B)

Hospital Telephone: (914) 694-4444

Directions to the Hospital:

1. Go North on River Street toward West Main Street
2. Take the first right onto West Main Street (bridge over rail road)
3. Continue straight to stay on West Main Street

4. Turn right onto Southside Avenue
5. Turn left onto Pinecrest Drive
6. Slight right to stay on Pinecrest Drive
7. Turn right onto Broadway

Total Distance: 2.1 miles

Total Estimated Time: 6 minutes

Figure 8: Map Showing Route from the Site to the Hospital:
(Available from hospital web site.)

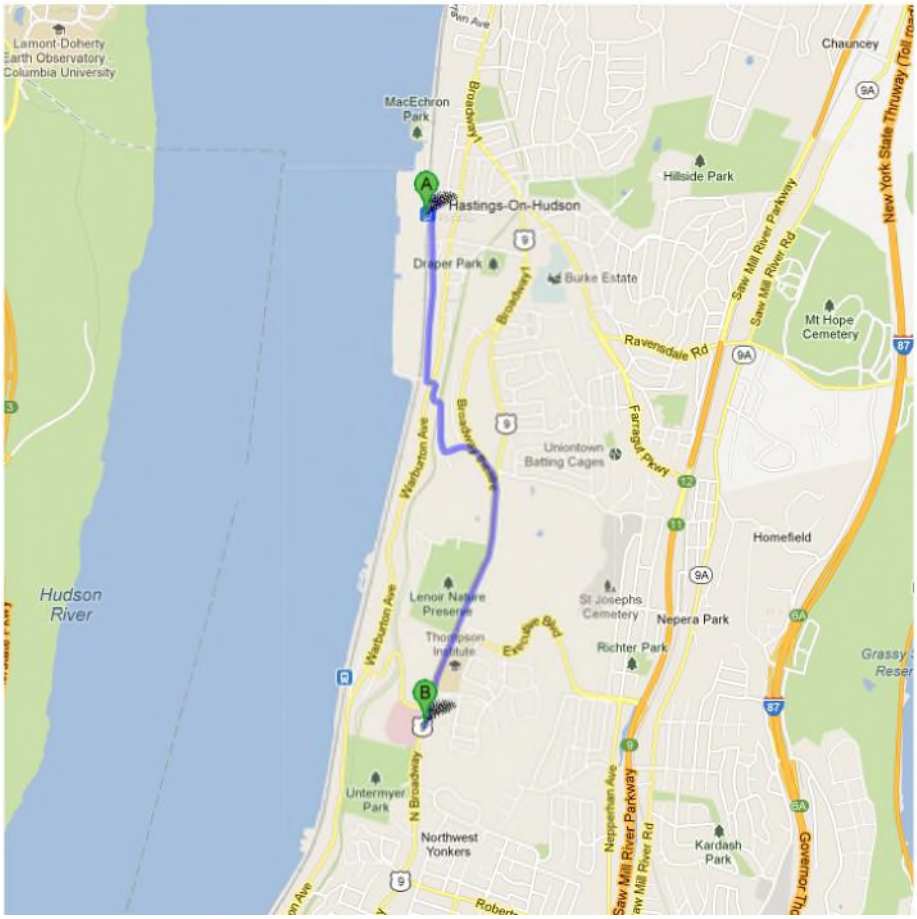

2.5.3 Response Procedures

As appropriate, the fire department and other emergency response group will be notified immediately by telephone of the emergency. The emergency telephone number list is found in Table 4. The list must also be posted prominently at the Site and made readily available to all personnel at all times.

Each Site visit will start with a health and safety session and a log will be made of all personnel and cell phone numbers. Site personnel without cell phones will be paired with personnel who have cell phones. If Site evacuation is necessary, all personnel shall be notified by verbal or phoned warning, and should proceed to the north gate for the Site (gate for vehicular entrance to the site) unless advised otherwise. The personnel log will be used to account for the evacuation of personnel on-site.

Site activities are limited to inspections of the grounds and the HASP in Appendix E has been prepared accordingly. Any changes to the scope of work will require review of the HASP, and amendments will include additional health and safety measures as warranted by those tasks.

For example, materials are not required to be brought on-site for the present scope. If modification to the scope requires that materials be brought to the site, then the HASP will require amendment to include health and safety measures associated with storage, handling, use, disposal, and accidental release of those materials. A sufficient supply of appropriate emergency response clean-up and personal protective equipment must be available such as sorbent media, decontamination solvents/detergents and water, trash bags, disposable gloves, and air monitoring equipment, etc.

At a minimum, should a spill or release occur which is a threat to human health or the environment, the employee observing the spill will first conduct or request an evacuation of all people at risk. Employees must report any chemical spill or release per the applicable HASP requirements to the Owner, and coordinate any additional notifications required as dictated by the incident. In the event of a spill or release that is not an immediate threat to human health or the environment, Site personnel, per the applicable HASP requirements, may initiate containment and control measures. As appropriate, air monitoring will be implemented and personal protection equipment will be donned prior to initiating any containment and control measures. Depending upon the nature of the spill, containment and control measures may include constructing a temporary containment berm, digging a lined sump, containing leaks or transferring contents from one container to another.

3.0 SITE MONITORING PLAN

3.1 INTRODUCTION

3.1.1 General

The Monitoring Plan describes the measures for evaluating the performance and effectiveness of the remedy to reduce or mitigate contamination at the site, the soil cover system, the erosion protection berm, and all affected site media identified below. Monitoring of other Engineering Controls is described in Chapter 4, Operation, Monitoring and Maintenance Plan. This Monitoring Plan may only be revised with the approval of NYSDEC.

3.1.2 Purpose and Schedule

This Monitoring Plan describes the methods to be used for:

- Assessing compliance with applicable NYSDEC standards, criteria and guidance, particularly Part 375 SCOs for soil;
- Assessing achievement of the remedial performance criteria;
- Evaluating Site information periodically to confirm that the remedy continues to be effective in protecting public health and the environment;
- Inspection and maintenance requirements for soil cover system and erosion protection berm; and
- Preparing the necessary reports for the various monitoring activities. To adequately address these issues, this Monitoring Plan provides information on:
    - Reporting requirements; and
    - Annual inspection and periodic certification.

Quarterly monitoring of the performance of the remedy will be conducted for the first year. The frequency will be yearly thereafter unless modified by NYSDEC.

3.2 SOIL COVER AND SITE-WIDE INSPECTION

Site-wide inspections including the soil cover system and erosion protection berm will be performed on a regular schedule at the frequency specified below. Site-wide inspections will also be performed after all severe weather conditions that may affect Engineering Controls; such as significant flooding of the site. During these inspections, an inspection form will be completed (Appendix F). The form will compile sufficient information to assess the following:

- Compliance with all ICs, including Site usage;
- An evaluation of the condition and continued effectiveness of ECs;
- General Site conditions at the time of the inspection;
- The Site management activities being conducted including, where appropriate, a health and safety inspection;
- Compliance with permits and schedules included in the Operation and Maintenance Plan, if any;
- Planting Success; and
- Confirm that Site records are up to date.

Note: If a Site inspection reveals that there is evidence of a release either on-site (discolored soil or localized stressed vegetation) or in the river (floating substances or visible film, sheen, globules or grease), refer to Section 2.5.3 for Response Procedures, and implement any resulting media sampling and monitoring plan.

3.3 AOC3 MONITORING PROGRAM

As outlined in Section 1.2, AOC3 is defined as the site-wide groundwater that includes AOC1. While AOC3 is covered under a separate SMP, monitoring requirements are included in this SMP for reference in the event that monitoring transfers to this SMP.

The groundwater monitoring includes two phases: Phase I monitoring will be completed during the groundwater system operation and Phase II will be completed during the post-operation Monitored Natural Attenuation (MNA) phase of the program. During Phase I, groundwater samples will be collected prior to the startup of the remedial system and then quarterly during the first two years of system operation, and then semiannually until the system is shutdown. Phase II monitoring will be completed quarterly for the first year after the shutdown of the remedial system and then annually until the NYSDEC is adequately satisfied that the chlorobenzene plume in groundwater is stable or shrinking and that no further actions are required. Wells will be sampled in accordance with Table 5 using the Low-Flow Groundwater Purging and Sampling Procedures for Monitoring Wells SOP (in Appendix G). The monitoring well locations are shown on Figure 7 and the well construction information is included in Appendix H.

Table 5: AOC3 Groundwater Monitoring Schedule

Monitoring Well ID	VOCs	SVOCs + TICs*	Dissolved Iron	Dissolved Manganese	Alkalinity	Methane	Chloride
Phase I Monitoring							
AB-MW-2	X	X	X	X	X	X	
AB-MW-3	X	X	X	X	X	X	
MW-1A	X						
MW-1/TW4	X						
MW-6	X						
MW-7A	X						
MW-9A	X	X	X	X	X	X	
MW-10	X	X	X	X	X	X	
MW-12	X	X					
MW-15	X	X					
MW-D1	X						
MW-S1	X						
MW-T3W	X						
OW-5AR	X						
OW-8	X	X	X	X	X	X	
OW-9A	X		X	X	X	X	
OW-12W	X	X	X	X	X	X	
AMW-6	X						
AMW-7	X						
AMW-8	X						
AMW-9	X						
Phase II Monitoring							

Monitoring Well ID	VOCs	SVOCs + TICs*	Dissolved Iron	Dissolved Manganese	Alkalinity	Methane	Chloride
AB-MW-1	X		X	X	X	X	X
AB-MW-2	X		X	X	X	X	X
AB-MW-3	X		X	X	X	X	X
MW-1A	X						
MW-6	X		X	X	X	X	X
MW-7A	X		X	X	X	X	X
MW-9A	X		X	X	X	X	X
MW-10	X						
MW-12	X						
MW-D1	X						
MW-S1	X						
MW-T3W	X						
OW-8	X		X	X	X	X	X
OW-9A	X		X	X	X	X	X
OW-12W	X		X	X	X	X	X
AMW-6	X						
AMW-7	X						
AMW-8	X						
AMW-9	X						

Notes:
*Tentatively Identified Compounds (TICs) are as follows: 0-chloraniline, 2-methyl-benzenamine, p-aminotoluene, 9,10-anthracenedione, 1,4-dihydroxy-9,10-anthracenedione, 1-hydroxy-9,10-anthracenedione, (z)-9-octadecenamine.
"X" - Groundwater sample location.

3.4 MONITORING QUALITY ASSURANCE/QUALITY CONTROL

All sampling and analyses will be performed in accordance with the requirements of the Quality Assurance Project Plan (QAPP) prepared for the site (Appendix I). Main Components of the QAPP include:

- QA/QC Objectives for Data Measurement;
- Sampling Program:
    - Sample containers will be properly washed, decontaminated, and appropriate preservative will be added (if applicable) prior to their use by the analytical laboratory. Containers with preservative will be tagged as such.
    - Sample holding times will be in accordance with the NYSDEC ASP requirements.

  - Field QC samples (e.g., trip blanks, coded field duplicates, and matrix spike/matrix spike duplicates) will be collected as necessary.

- Sample Tracking and Custody;
- Calibration Procedures:
  - All field analytical equipment will be calibrated immediately prior to each day's use. Calibration procedures will conform to manufacturer's standard instructions.
  - The laboratory will follow all calibration procedures and schedules as specified in USEPA SW-846 and subsequent updates that apply to the instruments used for the analytical methods.
- Analytical Procedures;
- Preparation of a Data Usability Summary Report (DUSR), which will present the results of data validation, including a summary assessment of laboratory data packages, sample preservation and chain of custody procedures, and a summary assessment of precision, accuracy, representativeness, comparability, and completeness for each analytical method.
- Internal QC and Checks;
- QA Performance and System Audits;
- Preventative Maintenance Procedures and Schedules;
- Corrective Action Measures.

3.5 INSPECTION/MONITORING REPORTING REQUIREMENTS

Forms and any other information generated during regular inspections will be kept on file and readily available on request. All forms, and other relevant reporting formats used during the monitoring/inspection events, will be (1) subject to approval by NYSDEC and (2) submitted at the time of the Periodic Review Report, as specified in the Reporting Plan of this SMP. All inspection/monitoring results will be reported to NYSDEC on a periodic basis in the Periodic Review Report. A letter report will also be prepared [if required by NYSDEC], subsequent to each event. The letter report will include, at a minimum:

- Date of event;
- Personnel conducting inspection;
- Description of the activities performed;
- Type of samples collected (e.g., groundwater, soil, sediment, sub-slab vapor, indoor air, outdoor air, etc), if appropriate;
- Copies of all field forms completed (inspection forms, etc.);
- Sampling results in comparison to appropriate standards/criteria;
- Soil cover system and erosion protection berm inspection results in comparison to previous results;
- Survey results to document site stability, including the shoreline;
- A survey to determine the percentage survival for plantings and percentage of invasive species;
- A figure illustrating locations of soil cover system needing repairs, as appropriate;
- Any observations, conclusions, or recommendations; and
- A determination as to whether the soil cover, including the shoreline, has changed since the last reporting event.

Table 6: Monitoring/Inspection and Reporting Schedule

Task	Frequency*
Site-wide inspection of soil cover system and erosion protection berm	Quarterly for the first year, yearly thereafter
Site-wide inspection of soil cover system and erosion protection berm after severe weather	10 days after severe event**
Site Survey	Initial and every two years
Plantings	Yearly for the first five years (Goal: 85% survival with less than 5% invasive species within 50 feet of shore)
Report	Annually upon approval of the SMP

* The frequency of events will be conducted as specified for a period of five years or as directed and approved by NYSDEC.

** A severe weather event includes rain in excess of 3” in a 24-hour period.

Cameras are available on-site to assist with monitoring for severe weather events. Cameras are located on the AOC3 groundwater remediation system equipment enclosure.

4.0 OPERATION AND MAINTENANCE PLAN

The Site remedy for AOC1 does not rely on any mechanical systems, such as sub-slab depressurization systems or air sparge/ soil vapor extraction systems to protect public health and the environment. Therefore, the operation and maintenance of such components is not included in this SMP. Information on non-mechanical Engineering Controls (i.e. soil cover system) is provided in Section 3 - Engineering and Institutional Control Plan.

As outlined in Section 1.2, AOC3 is defined as the site-wide groundwater that includes AOC1. While AOC3 is covered under a separate SMP, operation requirements are included in the following sections of this SMP for reference in the event that operation transfers to this SMP.

4.1 INTRODUCTION - AOC3 GROUNDWATER REMEDIATION SYSTEM

The 2012 AOC3 Groundwater Remediation System Final Design Report is provided as a separate document for reference in Appendix G. Operation and maintenance of the AOC3 Groundwater Remediation System is being performed in accordance with the *Groundwater Remediation System Operations, Maintenance, and Monitoring Manual* (OMM Manual, Appendix J).

The OMM Manual describes the measures necessary to operate, maintain, and monitor the mechanical components of the remedy selected for AOC3. The OMM Manual includes, but is not limited to, the following:

- Procedures necessary to allow individuals unfamiliar with the site to operate and maintain the system; and
- An operation and maintenance contingency plan.

The OMM Manual will be updated periodically to reflect changes in site conditions or the manner in which the system is operated and maintained.

4.2 AOC3 ENGINEERING CONTROL SYSTEM OPERATION AND MAINTENANCE

The system is remotely monitored on a daily basis and routine visits to the system are performed on a weekly basis. System maintenance is performed as required or as specified by individual component manufactures in accordance with preventive maintenance guidance. The OMM Manual in Appendix J provides additional detail about system operation and maintenance.

4.3 AOC3 ENGINEERING CONTROL SYSTEM PERFORMANCE MONITORING

System performance is gauged by evaluating the analytical results of system samples to understand the characteristics of the influent groundwater and the injected groundwater after amendment. System performance is also gauged by evaluation of the analytical results of groundwater monitoring samples. The OMM Manual in Appendix J provides additional detail about system performance monitoring.

4.4 AOC3 MAINTENANCE AND PERFORMANCE MONITORING REPORTING REQUIREMENTS

Maintenance reports and any other information generated during regular operations at the site will be kept on-file on-site. All reports, forms, and other relevant information generated will be available upon request to the NYSDEC and submitted as part of the Periodic Review Report for AOC3, or as specified in Section 5 of this SMP if AOC3 operation transfers to this SMP.

4.4.1 Routine Maintenance Reports

Copies of the system OMM logs and checklists are provided in the OMM Manual in Appendix J. Logs and checklists are completed on a weekly basis or as specified for specific tasks. Maintenance is performed as needed or as specified by individual component manufactures in accordance with preventive maintenance guidance. Preventative maintenance performed is documented and tracked. The OMM Manual in Appendix J provides additional detail about routine maintenance documentation and reporting.

4.4.2 Non-Routine Maintenance Reports

Copies of the system OMM logs and checklists are provided in the OMM Manual in Appendix J. Logs and checklists are completed on a weekly basis or as specified for specific tasks. Non-routine maintenance is performed as needed dependent upon system performance or based on deficiencies noted during routine inspections. . The OMM Manual in Appendix J provides additional detail about non-routine maintenance documentation and reporting.

5. INSPECTIONS, REPORTING AND CERTIFICATIONS

5.1 SITE INSPECTIONS

5.1.1 Inspection Frequency

All inspections will be conducted at the frequency specified in the schedules provided in Section 3 Monitoring Plan and Section 4 Operation and Maintenance Plan of this SMP. At a minimum, a site-wide inspection will be conducted annually. Inspections will also be conducted whenever a severe condition has taken place, such as an erosion or flooding event that may affect the ECs.

5.1.2 Inspection Forms, Sampling Data, and Maintenance Reports

All inspections will be recorded on the appropriate forms which are contained in Appendix F. Forms are subject to NYSDEC revision.

All applicable inspection forms and other records generated for the Site during the reporting period will be provided in electronic format in the Periodic Review Report.

5.1.3 Evaluation of Records and Reporting

The results of the inspection will be evaluated as part of the EC/IC certification to confirm that the:

- EC/ICs are in place, are performing properly, and remain effective;
- Maintenance activities are being conducted properly; and, based on the above items,
- The Site remedy continues to be protective of public health and the environment and is performing as designed in the Remedial Design Remedial Action Work Plan (RDRAWP) and Final Engineering Report (FER).

5.2 CERTIFICATION OF ENGINEERING AND INSTITUTIONAL CONTROLS

After the last inspection of the reporting period, a qualified environmental professional or Professional Engineer licensed to practice in New York State will prepare the following

certification:

For each institutional or engineering control identified for the Site, I certify that the following statements are true:

- The inspection of the Site to confirm the effectiveness of the institutional and engineering controls required by the remedial program was performed under my direction;
- The institutional control and/or engineering control employed at this Site is unchanged from the date the control was put in place, or last approved by the Department;
- Nothing has occurred that would impair the ability of the control to protect the public health and environment;
- Nothing has occurred that would constitute a violation or failure to comply with any Site management plan for this control;
- Access to the Site will continue to be provided to the Department to evaluate the remedy, including access to evaluate the continued maintenance of this control;
- If a financial assurance mechanism is required under the oversight document for the Site, the mechanism remains valid and sufficient for the intended purpose under the document;
- Use of the Site is compliant with the environmental easement;
- The engineering control systems are performing as designed and are effective;
- To the best of my knowledge and belief, the work and conclusions described in this certification are in accordance with the requirements of the Site remedial program and generally accepted engineering practices; and
- The information presented in this report is accurate and complete.

I certify that all information and statements in this certification form are true. I understand that a false statement made herein is punishable as a Class “A” misdemeanor, pursuant to Section 210.45 of the Penal Law. I, [name], of [business

address], am certifying as [Owner or Owner's Designated Site Representative].

The signed certification will be included in the Periodic Review Report described below.

5.3 PERIODIC REVIEW REPORT

A Periodic Review Report will be submitted to the Department every year, beginning eighteen months after the Certificate of Completion is issued. In the event that the Site is subdivided into separate parcels with different ownership, a single Periodic Review Report will be prepared that addresses the Site described in the Environmental Easement. The report will be prepared in accordance with NYSDEC DER-10 and submitted within 45 days of the end of each certification period. The report will include:

- Identification, assessment and certification of all ECs/ICs required by the remedy for the Site;
- Results of the required annual Site inspections and severe condition inspections, if applicable;
- All applicable inspection forms and other records generated for the Site during the reporting period in electronic format;
- Results of all analyses, copies of all laboratory data sheets, and the required laboratory data deliverables for all samples collected during the reporting period will be submitted electronically in a NYSDEC-approved format;
- A Site evaluation, which includes the following:
    - The compliance of the remedy with the requirements of the site-specific RDRAWP or ROD;
    - Any new conclusions or observations regarding Site contamination based on inspections or data generated by the Monitoring Plan for the media being monitored;
    - Recommendations regarding any necessary changes to the remedy and/or

Monitoring Plan; and

- The overall performance and effectiveness of the remedy.

The Periodic Review Report will be submitted, in hard-copy and electronic format, to the NYSDEC Regional Office in which the Site is located and the NYSDOH Bureau of Environmental Exposure Investigation.

5.4 CORRECTIVE MEASURES PLAN

If any component of the remedy is found to have failed, or if the periodic certification cannot be provided due to the failure of an institutional or engineering control, a corrective measures plan will be submitted to the NYSDEC for approval. This plan will explain the failure and provide the details and schedule for performing work necessary to correct the failure. Unless an emergency condition exists, no work will be performed pursuant to the corrective measures plan until it is approved by the NYSDEC.

TABLES

Table 1
Nature and Extent of Contamination

MEDIUM	CATEGORY	CONTAMINANT OF CONCERN	CONCENTRATION RANGE (ppm)	FREQUENCY of EXCEEDING SCGs/Background	SCG/ Bkgd. (ppm)
Surface Soils (0-3")	Semivolatile Organic Compounds (SVOCs)	Benzo(a)anthracene	ND (0.027) to 5.4	13 of 18	0.224
		Chrysene	ND (0.030) to 6.2	12 of 18	0.400
		Benzo(b)fluoranthene	ND (0.021) to 7.1	7 of 18	1.1
		Benzo(k)fluoranthene	ND (0.019) to 5.2	6 of 18	1.1
		Benzo(a) pyrene	ND (0.027) to 6.5	16 of 18	0.061
		Dibenzo(a,h) anthracene	ND (0.014) to 1.3	13 of 18	0.014
	Polychlorinated Biphenyls	Total PCBs	ND (0.001) to 5.0	7 of 33	1.0
	Metals	Arsenic	ND (3.0) to 90	11 of 18	7.5
		Barium	ND (1.0) to 8,120	7 of 18	300
		Beryllium	ND (1.0) to 8.1	17 of 18	0.160
		Chromium	ND (1.0) to 97	3 of 18	50
		Copper	ND (1.0) to 1,110	17 of 18	25
		Lead	ND (2.0) to 1,320	8 of 18	400
		Mercury	ND (0.2) to 2.8	16 of 18	0.100
		Nickel	ND (2.0) to 119	15 of 18	13
		Selenium	ND (4.0) to 2.5	2 of 18	2.0
		Vanadium	ND (1.0) to 2,190	3 of 18	150
		Zinc	ND (1.0) to 3,200	24 of 24	20

MEDIUM	CATEGORY	CONTAMINANT OF CONCERN	CONCENTRATION RANGE (ppm)	FREQUENCY of EXCEEDING SCGs/Background	SCG/ Bkgd. (ppm)
Near Surface Soils (3"-11")	Semivolatile Organic Compounds (SVOCs)	Benzo(a)anthracene	ND (0.027) to 23	5 of 6	0.224
		Chrysene	ND (0.030) to 25	4 of 6	0.400
		Benzo(b)fluoranthene	ND (0.021) to 23	2 of 6	1.1
		Benzo(k)fluoranthene	ND (0.019) to 25	2 of 6	1.1
		Benzo(a) pyrene	ND (0.027) to 25	5 of 6	0.061
		Indeno (1,2,3-cd) pyrene	ND (0.020) to 12	1 of 6	3.2
		Dibenzo(a,h) anthracene	ND (0.014) to 7.9	5 of 6	0.014
	Polychlorinated Biphenyls	Total PCBs	ND (0.001) to 4.4	1 of 6	1.0
	Metals	Arsenic	ND (3.0) to 19.8	2 of 6	7.5
		Barium	ND (1.0) to 954	3 of 6	300
		Beryllium	ND (1.0) to 0.39	6 of 6	0.160
		Copper	ND (1.0) to 428	6 of 6	25
		Lead	ND (2.0) to 403	1 of 6	400
		Mercury	ND (0.2) to 2.0	5 of 6	0.100
		Nickel	ND (2.0) to 35.9	5 of 6	13
		Zinc	ND (1.0) to 1,620	6 of 6	20

MEDIUM	CATEGORY	CONTAMINANT OF CONCERN	CONCENTRATION RANGE (ppm)	FREQUENCY of EXCEEDING SCGs/Background	SCG/ Bkgd. (ppm)
Subsurface Soils	Volatile Organic Compounds (VOCs)	Chlorobenzene	ND (0.10) to 31	6 of 33	1.7
		Trichloroethylene	ND (0.01) to 15	2 of 33	0.700
		Tetrachloroethylene	ND (0.01) to 50	3 of 33	1.4
		1,2-Dichloroethene	ND (0.01) to 23	1 of 33	0.300
		Vinyl Chloride	ND (0.01) to 1.8	1 of 33	0.200
	Semivolatile Organic Compounds (SVOCs)	Benzo(a)anthracene	ND (0.064) to 2.4	5 of 10	0.224
		Chrysene	ND (0.11) to 2.4	3 of 10	0.400
		Benzo(b)fluoranthene	ND (0.12) to 2.8	3 of 10	1.1
		Benzo(k)fluoranthene	ND (0.11) to 1.9	3 of 10	1.1
		Benzo(a) pyrene	ND (0.060) to 1.7	7 of 10	0.061
		Dibenzo(a,h) anthracene	ND (0.069) to 0.330	4 of 10	0.014
	Metals	Arsenic	ND (3.0) to 14.6	5 of 10	7.5
		Barium	ND (1.0) to 3,650	4 of 10	300
		Beryllium	ND (1.0) to 0.290	8 of 10	0.160
		Cadmium	ND (1.0) to 122	1 of 10	10
		Chromium	ND (1.0) to 120	1 of 10	50
		Copper	ND (1.0) to 28,700	9 of 10	25
		Lead	ND (2.0) to 3,090	2 of 10	400
		Mercury	ND (0.2) to 1.1	9 of 10	0.10
		Nickel	ND (2.0) to 1,120	5 of 10	13
		Selenium	ND (2.0) to 2.7	3 of 10	2
		Zinc	ND (1.0) to 43,500	10 of 10	20

MEDIUM	CATEGORY	CONTAMINANT OF CONCERN	CONCENTRATION RANGE (ppm)	FREQUENCY of EXCEEDING SCGs/Background	SCG/ Bkgd. (ppm)
Sediments	Volatile Organic Compounds (VOCs)	1,1,2,2-Tetrachloroethane	ND (1.0) to 5	1 of 12	0.45
	Polychlorinated Biphenyls	Total PCBs	ND (1.0) to 0.140	0 of 12	1.0
Groundwater	Volatile Organic Compounds (VOCs)	Chlorobenzene	ND (0.1) to 11,000	40 of 72	5.0
		Benzene	ND (0.1) to 170	18 of 72	1.0
		Ethyl Ether	ND (0.1) to 360	[1]	[1]
		Diisopropyl Ether	ND (0.1) to 410	[1]	[1]
	Semivolatile Organic Compounds (SVOCs)	2-Chlorophenol	ND (0.1) to 61	6 of 38	1.0
		1,4-Dichlorobenzene	ND (0.1) to 170	5 of 38	3.0
		4-Chloroaniline	ND (0.1) to 25	4 of 38	5.0
		Naphthalene	ND (0.1) to 650	8 of 72	10
	Metals (in filtered samples)	Antimony	ND (4.0) to 47	10 of 38	3.0
		Arsenic	ND (3.0) to 40	1 of 38	25
		Barium	ND (1.0) to 2,180	10 of 38	1,000
		Iron	ND (20) to 261,000	26 of 38	300
		Manganese	ND (4.0) to 8140	30 of 38	300
		Selenium	ND (4.0) to 17	14 of 38	10
		Thallium	ND (5.0) to 8.0	2 of 38	0.5

ND - Not detected at the detection limit listed in parenthesis

[1] - There are no ambient groundwater standards or guidance values for ethyl and diisopropyl ether

Table 2. Summary of Remaining Soil Contamination Above Unrestricted Levels - Results of Soil Samples Under Concrete Structures, Former Tappan Terminal, Hastings-on-Hudson, New York (2010)

Parameter (Concentrations in µg/kg)	Site-Specific Standards	Unrestricted Use Criteria	**Sample Designation:**	CP	CP	TP1-1	TP1-1	TP1-2	TP1-2	TP1-3	TP1-3	TP2-1	TP2-1	TP2-2	TP2-2	TP2-3	TP2-3	TP2-3DUP	TP3	TP3	TP4	TP4
			Sample Date:	9/15/2010	9/15/2010	9/23/2010	9/23/2010	9/23/2010	9/23/2010	9/23/2010	9/23/2010	9/20/2010	9/20/2010	9/20/2010	9/20/2010	9/20/2010	9/20/2010	9/20/2010	9/14/2010	9/14/2010	9/14/2010	9/14/2010
			Sample Depth (ft bls):	3	6	2	5	2.5	5	2	5	3	6	3	6	1.5	4	4	2	4	2	4
1,2,4,5-Tetrachlorobenzene				250 U	280 U	270 U	300 U	210 U	280 U	250 U	360 U	270 U	200 U	240 U	270 U	290 U	260 U	220 U	1400 U	240 U	1300 U	1300 U
2,2'-oxybis (1-chloropropane)				98 U	110 U	110 U	120 U	85 U	110 U	99 U	140 U	110 U	79 U	94 U	110 U	110 U	100 U	90 U	570 U	96 U	530 U	520 U
2,3,4,6-Tetrachlorophenol				250 U	280 U	270 U	300 U	210 U	280 U	250 U	360 U	270 U	200 U	240 U	270 U	290 U	260 U	220 U	1400 U	240 U	1300 U	1300 U
2,4,5-Trichlorophenol				250 U	280 U	270 U	300 U	210 U	280 U	250 U	360 U	270 U	200 U	240 U	270 U	290 U	260 U	220 U	1400 U	240 U	1300 U	1300 U
2,4,6-Trichlorophenol				250 U	280 U	270 U	300 U	210 U	280 U	250 U	360 U	270 U	200 U	240 U	270 U	290 U	260 U	220 U	1400 U	240 U	1300 U	1300 U
2,4-Dichlorophenol				250 U	280 U	270 U	300 U	210 U	280 U	250 U	360 U	270 U	200 U	240 U	270 U	290 U	260 U	220 U	1400 U	240 U	1300 U	1300 U
2,4-Dimethylphenol				250 U	280 U	270 U	300 U	210 U	280 U	250 U	360 U	270 U	200 U	240 U	270 U	947	217 J	187 J	1400 U	240 U	1300 U	1300 U
2,4-Dinitrophenol				980 U	1100 U	1100 U	1200 U	850 U	1100 U	990 U	1400 U	1100 U	790 U	940 U	1100 U	1100 U	1000 U	900 U	5700 U	960 U	5300 U	5200 U
2,4-Dinitrotoluene				98 U	110 U	110 U	120 U	85 U	110 U	99 U	140 U	110 U	79 U	94 U	110 U	110 U	100 U	90 U	570 U	96 U	530 U	520 U
2,6-Dinitrotoluene				98 U	110 U	110 U	120 U	85 U	110 U	99 U	140 U	110 U	79 U	94 U	110 U	110 U	100 U	90 U	570 U	96 U	530 U	520 U
2-Chloronaphthalene				98 U	110 U	110 U	120 U	85 U	110 U	99 U	140 U	110 U	79 U	94 U	110 U	110 U	100 U	90 U	570 U	96 U	530 U	520 U
2-Chlorophenol				250 U	280 U	270 U	300 U	210 U	280 U	250 U	360 U	270 U	200 U	240 U	270 U	290 U	260 U	220 U	1400 U	240 U	1300 U	1300 U
2-Methylnaphthalene				448	110 U	110 U	120 U	85 U	110 U	99 U	140 U	84.3 J	46.3 J	94 U	110 U	175	89.8 J	76.3 J	570 U	96 U	2460	1860
2-Methylphenol		330		98 U	110 U	110 U	120 U	85 U	110 U	99 U	140 U	110 U	79 U	94 U	110 U	104 J	100 U	90 U	570 U	96 U	530 U	520 U
2-Nitroaniline				250 U	280 U	270 U	300 U	210 U	280 U	250 U	360 U	270 U	200 U	240 U	270 U	290 U	260 U	220 U	1400 U	240 U	1300 U	1300 U
2-Nitrophenol				250 U	280 U	270 U	300 U	210 U	280 U	250 U	360 U	270 U	200 U	240 U	270 U	290 U	260 U	220 U	1400 U	240 U	1300 U	1300 U
3&4-Methylphenol		330		98 U	110 U	110 U	120 U	85 U	110 U	99 U	140 U	110 U	79 U	94 U	110 U	764	100 U	90 U	570 U	96 U	530 U	520 U
3,3'-Dichlorobenzidine				250 U	280 U	270 U	300 U	210 U	280 U	250 U	360 U	270 U	200 U	240 U	270 U	290 U	260 U	220 U	1400 U	240 U	1300 U	1300 U
3-Nitroaniline				250 U	280 U	270 U	300 U	210 U	280 U	250 U	360 U	270 U	200 U	240 U	270 U	290 U	260 U	220 U	1400 U	240 U	1300 U	1300 U
4,6-Dinitro-2-methylphenol				980 U	1100 U	1100 U	1200 U	850 U	1100 U	990 U	1400 U	1100 U	790 U	940 U	1100 U	1100 U	1000 U	900 U	5700 U	960 U	5300 U	5200 U
4-Bromophenyl phenyl ether				98 U	110 U	110 U	120 U	85 U	110 U	99 U	140 U	110 U	79 U	94 U	110 U	110 U	100 U	90 U	570 U	96 U	530 U	520 U
4-Chloro-3-methylphenol				250 U	280 U	270 U	300 U	210 U	280 U	250 U	360 U	270 U	200 U	240 U	270 U	290 U	260 U	220 U	1400 U	240 U	1300 U	1300 U
4-Chloroaniline				250 U	280 U	95.5 J	300 U	210 U	280 U	250 U	55.1 J	270 U	200 U	240 U	270 U	7140	376	522	1400 U	240 U	1300 U	1300 U
4-Chlorophenyl phenyl ether				98 U	110 U	110 U	120 U	85 U	110 U	99 U	140 U	110 U	79 U	94 U	110 U	110 U	100 U	90 U	570 U	96 U	530 U	520 U
4-Nitroaniline				250 U	280 U	270 U	300 U	210 U	280 U	250 U	360 U	270 U	200 U	240 U	270 U	1360	260 U	220 U	1400 U	240 U	1300 U	1300 U
4-Nitrophenol				490 U	560 U	540 U	600 U	430 U	550 U	490 U	710 U	530 U	390 U	470 U	530 U	570 U	520 U	450 U	2800 U	480 U	2600 U	2600 U
Acenaphthene		20,000		2120	56 U	80	38.9 J	28.3 J	55 U	34.4 J	145	613	224	47 U	53 U	150	173	158	280 U	48 U	2620	1040
Acenaphthylene		100,000		97.9	56 U	42.6 J	27 J	43 U	55 U	49 U	71 U	53 U	39 U	47 U	53 U	57 U	52 U	45 U	280 U	48 U	260 U	260 U
Acetophenone				250 U	280 U	270 U	300 U	210 U	280 U	250 U	360 U	270 U	200 U	240 U	270 U	290 U	260 U	220 U	1400 U	240 U	1300 U	1300 U
Anthracene		100,000		1030	56 U	185	70.6	53.3	55 U	29.3 J	117	144	161	57.2	95.1	985	350	346	214 J	48 U	1480	1070
Atrazine				250 U	280 U	270 U	300 U	210 U	280 U	250 U	360 U	270 U	200 U	240 U	270 U	290 U	260 U	220 U	1400 U	240 U	1300 U	1300 U
Benzaldehyde				250 U	280 U	270 U	300 U	210 U	280 U	250 U	360 U	270 U	200 U	240 U	270 U	290 U	260 U	220 U	1400 U	240 U	1300 U	1300 U
Benzo[a]anthracene		1,000		693	41 J	356	145	129	55 U	107	96.8	178	270	140	194	3400	676	805	205 J	32.5 J	397	1280
Benzo[a]pyrene		1,000		317	30.5 J	306	143	113	55 U	97.7	61 J	137	231	126	146	2930	606	718	280 U	22.3 J	209 J	1040
Benzo[b]fluoranthene		1,000		554	43.2 J	276	157	114	55 U	115	77.1	130	249	136	188	3830	548	665	280 U	24.9 J	369	1420
Benzo[g,h,i]perylene		100,000		152	56 U	152	108	70.7	55 U	69.9	38.4 J	78.1	130	70	100	1700	362	448	280 U	48 U	153 J	617
Benzo[k]fluoranthene		800		232	22.6 J	199	103	82.6	55 U	69.7	49.4 J	128	82.6	107	139	1640	458	458	280 U	19.8 J	155 J	512
Bis(2-chloroethoxy)methane				98 U	110 U	110 U	120 U	85 U	110 U	99 U	140 U	110 U	79 U	94 U	110 U	110 U	100 U	90 U	570 U	96 U	530 U	520 U
Bis(2-chloroethyl) ether				98 U	110 U	110 U	120 U	85 U	110 U	99 U	140 U	110 U	79 U	94 U	110 U	110 U	100 U	90 U	570 U	96 U	530 U	520 U
Bis(2-ethylhexyl) phthalate				98 U	110 U	110 U	120 U	85 U	110 U	80.5 J	140 U	110 U	79 U	142	110 U	110 U	100 U	90 U	570 U	84 J	356 J	423 J
Butylbenzyl phthalate				98 U	110 U	110 U	120 U	85 U	110 U	99 U	140 U	110 U	79 U	94 U	110 U	110 U	100 U	90 U	570 U	96 U	530 U	520 U
Caprolactam				98 U	110 U	110 U	120 U	85 U	110 U	99 U	140 U	110 U	79 U	94 U	110 U	110 U	100 U	90 U	570 U	96 U	530 U	520 U
Carbazole				324	110 U	110 U	120 U	85 U	110 U	99 U	37.9 J	110 U	45 J	94 U	110 U	271	103	97	570 U	96 U	530 U	165 J
Chrysene		1,000		680	50.4 J	387	167	141	55 U	139	133	214	262	159	227	3220	749	858	201 J	45.6 J	503	1450
Dibenzo[a,h]anthracene		330		79.6	56 U	57.4	37.3 J	22.7 J	55 U	24.5 J	71 U	53 U	82.2	47 U	53 U	848	184	274	280 U	48 U	260 U	323
Dibenzofuran				1230	110 U	56.2 J	120 U	18 J	110 U	99 U	47.7 J	166	88.4	94 U	110 U	80.8 J	108	129	570 U	96 U	1190	451 J
Diethyl phthalate				98 U	110 U	110 U	120 U	85 U	110 U	99 U	140 U	110 U	79 U	94 U	110 U	110 U	100 U	90 U	570 U	96 U	530 U	520 U
Dimethyl phthalate				103	98.5 J	128	120 U	85 U	110 U	63.9 J	140 U	110 U	79 U	94 U	110 U	110 U	100 U	90 U	316 J	81 J	530 U	520 U
Di-n-butyl phthalate				98 U	110 U	110 U	120 U	85 U	110 U	99 U	140 U	110 U	79 U	94 U	110 U	110 U	100 U	90 U	570 U	96 U	530 U	520 U
Di-n-octyl phthalate				98 U	110 U	110 U	120 U	85 U	110 U	99 U	140 U	110 U	79 U	94 U	110 U	110 U	100 U	90 U	570 U	96 U	530 U	520 U
Diphenyl				186	110 U	110 U	120 U	85 U	110 U	99 U	140 U	110 U	79 U	94 U	110 U	61.9 J	36.4 J	32.7 J	570 U	96 U	530 U	520 U
Fluoranthene		100,000		3660	80.5	769	273	267	55 U	206	502	470	557	348	476	9930	1610	1660	5290	86.9	1530	2560
Fluorene		30,000		1830	56 U	185	37.8 J	36.2 J	55 U	30 J	103	295	112	47 U	81.3	247	206	199	162 J	48 U	5020	1600
Hexachlorobenzene				98 U	110 U	110 U	120 U	85 U	110 U	99 U	140 U	110 U	79 U	94 U	110 U	110 U	100 U	90 U	570 U	96 U	530 U	520 U
Hexachlorobutadiene				49 U	56 U	54 U	60 U	43 U	55 U	49 U	71 U	53 U	39 U	47 U	53 U	57 U	52 U	45 U	280 U	48 U	260 U	260 U
Hexachlorocyclopentadiene				980 U	1100 U	1100 U	1200 U	850 U	1100 U	990 U	1400 U	1100 U	790 U	940 U	1100 U	1100 U	1000 U	900 U	5700 U	960 U	5300 U	5200 U
Hexachloroethane				250 U	280 U	270 U	300 U	210 U	280 U	250 U	360 U	270 U	200 U	240 U	270 U	290 U	260 U	220 U	1400 U	240 U	1300 U	1300 U
Indeno[1,2,3-cd]pyrene		500		151	56 U	136	96.7	67.3	55 U	68.5	37.7 J	90.5	120	69.2	89.7	1730	335	396	280 U	48 U	260 U	630
Isophorone				98 U	110 U	110 U	120 U	85 U	110 U	99 U	140 U	110 U	79 U	94 U	110 U	110 U	100 U	90 U	570 U	96 U	530 U	520 U
Naphthalene		12,000		193	107	47.6 J	60 U	43 U	55 U	49 U	36.7 J	189	157	67.4	49.8 J	290	177	162	280 U	48 U	260 U	650
Nitrobenzene				98 U	110 U	110 U	120 U	85 U	110 U	99 U	140 U	110 U	79 U	94 U	110 U	110 U	100 U	90 U	570 U	96 U	530 U	520 U
n-Nitrosodi-n-propylamine				98 U	110 U	110 U	120 U	85 U	110 U	99 U	140 U	110 U	79 U	94 U	110 U	110 U	100 U	90 U	570 U	96 U	530 U	520 U
n-Nitrosodiphenylamine				250 U	280 U	410	300 U	210 U	280 U	250 U	715	270 U	200 U	240 U	270 U	290 U	260 U	64.1 J	1400 U	240 U	1300 U	1300 U
Pentachlorophenol		800		490 U	560 U	540 U	600 U	430 U	550 U	490 U	710 U	530 U	390 U	470 U	530 U	570 U	520 U	450 U	2800 U	480 U	2600 U	2600 U
Phenanthrene		100,000		5260	39.8 J	586	113	189	55 U	129	443	378	416	226	339	1310	1170	1140	282	30.7 J	10000	4480
Phenol		330		98 U	110 U	110 U	120 U	85 U	110 U	99 U	140 U	110 U	79 U	94 U	110 U	110 U	100 U	90 U	570 U	96 U	530 U	520 U
Pyrene		100,000		2720	79.6	769	282	274	55 U	228	436	436	547	293	386	7900	1260	1370	795	60.7	2000	3020
Total SVOC (in mg/kg)	500			22.0605	0.5931	5.2233	1.7993	1.6061	0	1.4924	3.1318	3.7309	3.7805	1.9408	2.5109	51.0137	9.7942	10.7651	7.465	0.4884	28.442	24.591

B - Analyte in associated blank
J - Estimated value
U - Indicates that the compound was analyzed for but not detected
DUP - Duplicate sample
µg/kg - Micrograms per kilogram
ft bls - Feet below land surface
mg/kg - Milligrams per kilogram
SVOC - Semivolatile Organic Compounds
Value exceeds or potentially exceeds NYSDEC Soil Cleanup Objective (SCO) for Unrestricted Use Criteria.

Table 2. Summary of Remaining Soil Contamination Above Unrestructed Levels - Results of Soil Samples in the Excavation Area, Former Tappan Terminal, Hastings-on-Hudson, New York

Parameter (Concentrations in µg/kg)	Site-Specific Criteria	Unrestricted Use Criteria	**Sample Designation:**	B1	B2	B3	B4	B5	B6	B6 DUP	B7	B8	B9	B10	B11	B12	B13	B14	B15	B16	B17	B18	B19
			Sample Date:	11/18/2010	11/18/2010	11/18/2010	11/19/2010	11/18/2010	11/18/2010	11/18/2010	11/19/2010	11/23/2010	11/22/2010	11/22/2010	11/22/2010	11/22/2010	11/23/2010	11/23/2010	11/22/2010	11/22/2010	11/30/2010	11/30/2010	12/3/2010
			Sample Depth (ft bls):	5.5-5.5	5.5-5.5	6-6	5.5-5.5	6-6	6-6	6-6	6-6	6.5-6.5	5.5-6	5.5-6	5.5-6	5.5-6	6-6	6-6	6.5-6.5	6.5-6.5	6.5-6.5	6.5-6.5	7.5
1,2,4,5-Tetrachlorobenzene				340 U	250 U	370 U	350 U	240 U	270 U	320 U	270 U	220 U	260 U	180 U	190 U	280 U	240 UJ	400 U	270 U	200 U	270 U	210 U	350 U
2,2'-oxybis (1-chloropropane)				140 U	99 U	150 U	140 U	95 U	110 U	130 U	110 U	89 U	100 U	72 U	75 U	110 U	98 U	160 U	110 U	80 U	110 U	84 U	140 U
2,3,4,6-Tetrachlorophenol				340 U	250 U	370 U	350 U	240 U	270 U	320 U	270 U	220 U	260 U	180 U	190 U	280 U	240 UJ	400 U	270 U	200 U	270 U	210 U	350 U
2,4,5-Trichlorophenol				340 U	250 U	370 U	350 U	240 U	270 U	320 U	270 U	220 U	260 U	180 U	190 U	280 U	240 UJ	400 U	270 U	200 U	270 U	210 U	350 U
2,4,6-Trichlorophenol				340 U	250 U	370 U	350 U	240 U	270 U	320 U	270 U	220 U	260 U	180 U	190 U	280 U	240 UJ	400 U	270 U	200 U	270 U	210 U	350 U
2,4-Dichlorophenol				340 U	250 U	370 U	350 U	240 U	270 U	320 U	270 U	220 U	260 U	180 U	190 U	280 U	240 UJ	400 U	270 U	200 U	270 U	210 U	350 U
2,4-Dimethylphenol				340 U	250 U	370 U	350 U	649	270 U	320 U	270 U	220 U	260 U	180 U	190 U	280 U	240 U	400 U	270 U	200 U	270 U	210 U	350 U
2,4-Dinitrophenol				1400 U	990 U	1500 U	1400 U	950 U	1100 U	1300 U	1100 U	890 U	1000 U	720 U	750 U	1100 U	980 UJ	1600 U	1100 U	800 U	1100 U	840 U	1400 U
2,4-Dinitrotoluene				140 U	99 U	150 U	140 U	95 U	110 U	130 U	110 U	89 U	100 U	72 U	75 U	110 U	98 UJ	160 U	110 U	80 U	110 U	84 U	140 U
2,6-Dinitrotoluene				140 U	99 U	150 U	140 U	95 U	110 U	130 U	110 U	89 U	100 U	72 U	75 U	110 U	98 UJ	160 U	110 U	80 U	110 U	84 U	140 U
2-Chloronaphthalene				140 U	99 U	150 U	140 U	95 U	110 U	130 U	110 U	89 U	100 U	72 U	75 U	110 U	98 UJ	160 U	51.7 J	80 U	110 U	84 U	140 U
2-Chlorophenol				340 U	250 U	370 U	350 U	240 U	270 U	320 U	270 U	220 U	260 U	180 U	190 U	280 U	240 U	400 U	270 U	200 U	270 U	210 U	350 U
2-Methylnaphthalene				9310	281	59.6 J	3740	348	59.3 J	270	264	89 U	398	664	62.3 J	5470	98 U	160 U	36.8 J	270	110 U	356	140 U
2-Methylphenol		330		140 U	99 U	150 U	140 U	95 U	110 U	130 U	110 U	89 U	100 U	72 U	75 U	110 U	98 U	160 U	110 U	80 U	110 U	84 U	140 U
2-Nitroaniline				340 U	250 U	370 U	350 U	240 U	270 U	320 U	270 U	220 U	260 U	180 U	190 U	280 U	240 UJ	400 U	270 U	200 U	270 U	210 U	350 U
2-Nitrophenol				340 U	250 U	370 U	350 U	240 U	270 U	320 U	270 U	220 U	260 U	180 U	190 U	280 U	240 U	400 U	270 U	200 U	270 U	210 U	350 U
3&4-Methylphenol		330		140 U	99 U	150 U	140 U	95 U	110 U	130 U	110 U	89 U	100 U	72 U	75 U	110 U	98 U	160 U	110 U	80 U	110 U	84 U	140 U
3,3'-Dichlorobenzidine				340 U	250 U	370 U	350 U	240 U	270 U	320 U	270 U	220 UJ	260 U	180 U	190 U	280 U	240 UJ	400 U	270 U	200 U	270 U	210 U	350 U
3-Nitroaniline				340 U	250 U	370 U	350 U	240 U	270 U	320 U	270 U	220 U	260 U	180 U	190 U	280 U	240 UJ	400 U	270 U	200 U	270 U	210 U	350 U
4,6-Dinitro-2-methylphenol				1400 U	990 U	1500 U	1400 U	950 U	1100 U	1300 U	1100 U	890 U	1000 U	720 U	750 U	1100 U	980 UJ	1600 U	1100 U	800 U	1100 U	840 U	1400 U
4-Bromophenyl phenyl ether				140 U	99 U	150 U	140 U	95 U	110 U	130 U	110 U	89 U	100 U	72 U	75 U	110 U	98 UJ	160 U	110 U	80 U	110 U	84 U	140 U
4-Chloro-3-methylphenol				340 U	250 U	370 U	350 U	240 U	270 U	320 U	270 U	220 U	260 U	180 U	190 U	280 U	240 U	400 U	270 U	200 U	270 U	210 U	350 U
4-Chloroaniline				340 U	250 U	370 U	350 U	240 U	270 U	320 U	270 U	220 U	260 U	180 U	190 U	280 U	240 U	400 U	270 U	200 U	270 U	210 U	350 U
4-Chlorophenyl phenyl ether				140 U	99 U	150 U	140 U	95 U	110 U	130 U	110 U	89 U	100 U	72 U	75 U	110 U	98 UJ	160 U	110 U	80 U	110 U	84 U	140 U
4-Nitroaniline				340 U	250 U	370 U	350 U	240 U	270 U	320 U	270 U	220 U	260 U	180 U	190 U	280 U	240 UJ	400 U	270 U	200 U	270 U	210 U	350 U
4-Nitrophenol				680 U	500 U	750 U	710 U	480 U	530 U	640 U	540 U	440 U	520 U	360 U	380 U	550 U	490 UJ	810 U	530 U	400 U	530 U	420 U	700 U
Acenaphthene		20,000		1120	137	75 U	323	216	53 U	30.5 J	122	44 U	283	297	38 U	2710	1950 J	468	53 U	20.8 J	52 J	278	56.6 J
Acenaphthylene		100,000		68 U	50 U	75 U	71 U	48 U	53 U	64 U	54 U	44 U	52 U	44.5	38 U	55 U	49 UJ	81 U	53 U	40 U	42.5 J	42 U	70 U
Acetophenone				340 U	250 U	370 U	350 U	240 U	270 U	320 U	270 U	220 U	260 U	180 U	190 U	280 U	240 U	400 U	270 U	200 U	270 U	210 U	350 U
Anthracene		100,000		68 U	50 U	75 U	130	48 U	53 U	64 U	294	44 U	52 U	605	38 U	541	1550 J	81 U	53 U	40 U	125	186	60.8 J
Atrazine				340 U	250 U	370 U	350 U	240 U	270 U	320 U	270 U	220 U	260 U	180 U	190 U	280 U	240 U	400 U	270 U	200 U	270 U	210 U	350 U
Benzaldehyde				340 U	250 U	327 J	350 U	240 U	270 U	320 U	270 U	220 U	260 U	180 U	190 U	280 U	240 U	400 U	270 U	200 U	270 U	210 U	350 U
Benzo[a]anthracene		1,000		367	43.3 J	75 U	156	48 U	59.1	64 U	667	235 J	69.4	989	105	510	2390 J	454	53 U	97.8	210	363	168
Benzo[a]pyrene		1,000		410	40.8 J	75 U	123	48 U	67.2	64 U	649	171 J	61.7	929	104	515	2520 J	475	58.7	107	243	318	139
Benzo[b]fluoranthene		1,000		423	42 J	75 U	71 U	48 U	108	64 U	561	199 J	79.2	957	108	480	2560 J	519	84.3	146	84.7	255	141
Benzo[g,h,i]perylene		100,000		255	50 U	75 U	71.1	48 U	60.8	64 U	440	103 J	45.4 J	538	71.9	371	1790 J	218	53 U	84.6	169	183	76.5
Benzo[k]fluoranthene		800		133	50 U	75 U	71 U	48 U	36.6 J	64 U	387	71.7 J	52 U	723	65.5	312	2250 J	230	53 U	45.6	193	229	71.3
Bis(2-chloroethoxy)methane				140 U	99 U	150 U	140 U	95 U	110 U	130 U	110 U	89 U	100 U	72 U	75 U	110 U	98 U	160 U	110 U	80 U	110 U	84 U	140 U
Bis(2-chloroethyl) ether				140 U	99 U	150 U	140 U	95 U	110 U	130 U	110 U	89 U	100 U	72 U	75 U	110 U	98 U	160 U	110 U	80 U	110 U	84 U	140 U
Bis(2-ethylhexyl) phthalate				365	56.5 J	150 U	159	340	111	130 U	1420	89 UJ	100 U	72 U	75 U	110 U	146 J	1670	1150	80 U	110 U	72.8 J	140 U
Butylbenzyl phthalate				140 U	99 U	150 U	140 U	95 U	110 U	130 U	110 U	89 UJ	100 U	72 U	75 U	110 U	98 UJ	160 U	110 U	80 U	110 U	84 U	140 U
Caprolactam				140 U	99 U	150 U	140 U	95 U	110 U	130 U	110 U	89 U	100 U	72 U	75 U	110 U	98 U	160 U	110 U	80 U	110 U	84 U	140 U
Carbazole				140 U	99 U	150 U	57.1 J	95 U	110 U	130 U	135	51.6 J	100 U	236	24.4 J	110 U	538 J	160 U	110 U	80 U	32 J	65.6 J	140 U
Chrysene		1,000		418	50 U	75 U	172	48 U	53 U	64 U	780	220 J	52 U	1100	79.2	782	2740 J	504	53 U	67.3	308	403	212
Dibenzo[a,h]anthracene		330		135	50 U	75 U	31.2 J	48 U	31 J	64 U	168	59.7 J	52 U	254	34.1 J	176	734 J	108	53 U	40 U	70.9	79.9	70 U
Dibenzofuran				390	89.3 J	150 U	258	165	110 U	130 U	110 U	30.9 J	144	211	25.9 J	1410	957 J	127 J	34.9 J	48.3 J	110 U	112	140 U
Diethyl phthalate				140 U	99 U	150 U	140 U	95 U	110 U	119 J	110 U	89 U	100 U	72 U	75 U	110 U	98 UJ	160 U	110 U	80 U	110 U	84 U	140 U
Dimethyl phthalate				140 U	87.4 J	133 J	140 U	95 U	113	145	140	89 U	62.5 J	63.3 J	45.3 J	110 U	98 UJ	451	73.9 J	66.7 J	87.8 JB	122 B	119 J
Di-n-butyl phthalate				140 U	99 U	150 U	140 U	95 U	110 U	488	110 U	89 U	100 U	72 U	75 U	110 U	98 UJ	160 U	110 U	80 U	110 U	84 U	102 J
Di-n-octyl phthalate				140 U	99 U	150 U	140 U	95 U	110 U	130 U	110 U	89 UJ	100 U	72 U	75 U	110 U	98 UJ	160 U	110 U	80 U	110 U	84 U	140 U
Diphenyl				140 U	99 U	150 U	140 U	95 U	110 U	130 U	47.2 J	89 U	100 U	41.5 J	75 U	110 U	98 UJ	160 U	110 U	80 U	110 U	30.1 J	140 U
Fluoranthene		100,000		444	80.9	33.3 J	365	64.3	84.8	64 U	970	304	124	2200	239	1150	5720	506	195	193	452	633	355
Fluorene		30,000		1320	271	123	618	433	53 U	220	201	48.5	461	404	59.8	3420	2620 J	514	171	142	53.7	349	46.7 J
Hexachlorobenzene				140 U	99 U	150 U	140 U	95 U	110 U	130 U	110 U	89 U	100 U	72 U	75 U	110 U	98 UJ	160 U	110 U	80 U	110 U	84 U	140 U
Hexachlorobutadiene				68 U	50 U	75 U	71 U	48 U	53 U	64 U	54 U	44 U	52 U	36 U	38 U	55 U	49 U	81 U	53 U	40 U	53 U	42 U	70 U
Hexachlorocyclopentadiene				1400 U	990 U	1500 U	1400 U	950 U	1100 U	1300 U	1100 U	890 U	1000 U	720 U	750 U	1100 U	980 UJ	1600 U	1100 U	800 U	1100 U	840 U	1400 U
Hexachloroethane				340 U	250 U	370 U	350 U	240 U	270 U	320 U	270 U	220 U	260 U	180 U	190 U	280 U	240 U	400 U	270 U	200 U	270 U	210 U	350 U
Indeno[1,2,3-cd]pyrene		500		198	50 U	75 U	74.7	48 U	58.9	64 U	369	102 J	45.3 J	518	61.2	317	1690 J	183	53 U	71.1	145	167	73
Isophorone				140 U	99 U	150 U	140 U	95 U	110 U	130 U	110 U	89 U	100 U	72 U	75 U	110 U	98 U	160 U	110 U	80 U	110 U	84 U	140 U
Naphthalene		12,000		68 U	50 U	75 U	312	48 U	71.5	172	91.3	60.5	241	275	64	55 U	49 U	144	129	125	74.4	178	31.3 J
Nitrobenzene				140 U	99 U	150 U	140 U	95 U	110 U	130 U	110 U	89 U	100 U	72 U	75 U	110 U	98 U	160 U	110 U	80 U	110 U	84 U	140 U
n-Nitrosodi-n-propylamine				140 U	99 U	150 U	140 U	95 U	110 U	130 U	110 U	89 U	100 U	72 U	75 U	110 U	98 U	160 U	110 U	80 U	110 U	84 U	140 U
n-Nitrosodiphenylamine				340 U	250 U	370 U	350 U	240 U	270 U	320 U	270 U	220 U	260 U	180 U	190 U	280 U	240 UJ	400 U	270 U	200 U	270 U	210 U	350 U
Pentachlorophenol		800		680 U	500 U	750 U	710 U	480 U	530 U	640 U	540 U	440 U	520 U	360 U	380 U	550 U	490 UJ	810 U	530 U	400 U	530 U	420 U	700 U
Phenanthrene		100,000		3850	862	218	1570	1210	53 U	433	1010	367	1140	2630	163	11700	7300	1200	112	350	400	941	193
Phenol		330		140 U	99 U	150 U	140 U	95 U	110 U	130 U	110 U	89 U	100 U	72 U	165	110 U	98 U	160 U	110 U	80 U	110 U	84 U	79.7 J
Pyrene		100,000		750	95.5	43.8 J	346	75.5	108	64 U	1160	462 J	124	2020	255	1410	4620 J	543	265	215	409	858	281
Total SVOC (in mg/kg)	500			19.888	2.0867	0.9377	8.5061	3.5008	0.9692	1.8775	9.8755	2.4859	3.2785	15.6993	1.7326	31.274	42.075	8.314	2.3623	2.0502	3.152	6.1794	2.2059

B - Analyte in associated blank
J - Estimated value
U - Indicates that the compound was analyzed for but not detected
DUP - Duplicate sample
µg/kg - Micrograms per kilogram
ft bls - Feet below land surface
mg/kg - Milligrams per kilogram
SVOC - Semivolatile Organic Compounds
Value exceeds or potentially exceeds NYSDEC SCO for Unrestricted Use Criteria.

Table 2. Summary of Remaining Soil Contamination Above Unrestructed Levels - Results of Soil Samples in the Excavation Area, Former Tappan Terminal, Hastings-on-Hudson, New York

Parameter (Concentrations in µg/kg)	Site-Specific Criteria	Unrestricted Use Criteria	**Sample Designation:**	B19 DUP	B20	B21	B22	B22-1	A1-E1	A1-E2	A1-E3	A1-E4	A1-E5	A1-E6	A1-E7	A1-N1	A1-N2	A1-S1	A1-S2-1	A1-W1	A1-W2	A1-W3	A1-W4	A1-W5
			Sample Date:	12/3/2010	12/16/2010	12/16/2010	1/25/2011	2/10/2011	11/17/2010	11/17/2010	11/17/2010	11/22/2010	11/23/2010	12/16/2010	12/16/2010	11/23/2010	11/23/2010	11/18/2010	11/19/2010	11/17/2010	11/18/2010	11/18/2010	11/19/2010	11/18/2010
			Sample Depth (ft bls):	7.5	5.5-6	5.5-6	8.5-8.5	10-10	4-4.5	4-4.5	4-4.5	5.5-6	6-6	3.5-4	4.5-5	5.5-5.5	5.5-5.5	6-6	6-6	4-4.5	5-5	5.7-5.7	5.5-5.5	6-6
1,2,4,5-Tetrachlorobenzene				350 U	240 U	230 U	399 J	330 U	320 U	320 U	240 U	180 U	240 U	180 U	200 U	380 UJ	350 U	360 U	340 U	270 U	250 U	210 U	290 U	220 U
2,2'-oxybis (1-chloropropane)				140 U	98 U	91 U	390 U	130 U	130 U	130 U	97 U	71 U	95 U	71 U	80 U	150 U	140 U	140 U	140 U	110 U	99 U	85 U	120 U	89 U
2,3,4,6-Tetrachlorophenol				350 U	240 U	230 U	970 U	330 U	320 U	320 U	240 U	180 U	240 U	180 U	200 U	380 UJ	350 U	360 U	340 U	270 U	250 U	210 U	290 U	220 U
2,4,5-Trichlorophenol				350 U	240 U	230 U	970 U	330 U	320 U	320 U	240 U	180 U	240 U	180 U	200 U	380 UJ	350 U	360 U	340 U	270 U	250 U	210 U	290 U	220 U
2,4,6-Trichlorophenol				350 U	240 U	230 U	970 U	330 U	320 U	320 U	240 U	180 U	240 U	180 U	200 U	380 UJ	350 U	360 U	340 U	270 U	250 U	210 U	290 U	220 U
2,4-Dichlorophenol				350 U	240 U	230 U	970 U	330 U	320 U	320 U	240 U	180 U	240 U	180 U	200 U	380 U	350 U	360 U	340 U	270 U	250 U	210 U	290 U	220 U
2,4-Dimethylphenol				350 U	240 U	230 U	970 U	330 U	320 U	497	240 U	180 U	240 U	180 U	200 U	380 U	350 U	360 U	340 U	270 U	250 U	210 U	290 U	220 U
2,4-Dinitrophenol				1400 U	980 U	910 U	3900 U	1300 U	1300 U	1300 U	970 U	710 U	950 U	710 U	800 U	1500 UJ	1400 U	1400 U	1400 U	1100 U	990 U	850 U	1200 U	890 U
2,4-Dinitrotoluene				140 U	98 U	91 U	390 U	130 U	130 U	130 U	97 U	71 U	95 U	71 U	80 U	150 UJ	140 U	140 U	140 U	110 U	99 U	85 U	120 U	89 U
2,6-Dinitrotoluene				140 U	98 U	91 U	390 U	130 U	130 U	130 U	97 U	71 U	95 U	71 U	80 U	150 UJ	140 U	140 U	140 U	110 U	99 U	85 U	120 U	89 U
2-Chloronaphthalene				140 U	98 U	91 U	390 U	130 U	130 U	130 U	97 U	71 U	95 U	71 U	80 U	150 UJ	140 U	140 U	140 U	110 U	99 U	85 U	120 U	89 U
2-Chlorophenol				350 U	240 U	230 U	970 U	330 U	320 U	320 U	240 U	180 U	240 U	180 U	200 U	380 U	350 U	360 U	340 U	270 U	250 U	210 U	290 U	220 U
2-Methylnaphthalene				140 U	98 U	206	660	66.2 J	718	70.3 J	103	396	117	71 U	40.3 J	150 U	101 J	100 J	140 U	110 U	113	1050	100 J	12600
2-Methylphenol		330		140 U	98 U	91 U	390 U	130 U	130 U	130 U	97 U	71 U	95 U	71 U	80 U	150 U	140 U	140 U	140 U	110 U	99 U	85 U	120 U	89 U
2-Nitroaniline				350 U	240 U	230 U	970 U	330 U	320 U	320 U	240 U	180 U	240 U	180 U	200 U	380 UJ	350 U	360 U	340 U	270 U	250 U	210 U	290 U	220 U
2-Nitrophenol				350 U	240 U	230 U	970 U	330 U	320 U	320 U	240 U	180 U	240 U	180 U	200 U	380 U	350 U	360 U	340 U	270 U	250 U	210 U	290 U	220 U
3&4-Methylphenol		330		140 U	98 U	91 U	390 U	130 U	130 U	130 U	97 U	71 U	95 U	71 U	80 U	150 U	140 U	140 U	140 U	177	99 U	85 U	120 U	89 U
3,3'-Dichlorobenzidine				350 U	240 U	230 U	970 U	330 U	320 U	320 U	240 U	180 U	240 U	180 U	200 U	380 UJ	350 UJ	360 U	340 U	270 U	250 U	210 U	290 U	220 U
3-Nitroaniline				350 U	240 U	230 U	970 U	330 U	320 U	320 U	240 U	180 U	240 U	180 U	200 U	380 UJ	350 U	360 U	340 U	270 U	250 U	210 U	290 U	220 U
4,6-Dinitro-2-methylphenol				1400 U	980 U	910 U	3900 U	1300 U	1300 U	1300 U	970 U	710 U	950 U	710 U	800 U	1500 UJ	1400 U	1400 U	1400 U	1100 U	990 U	850 U	1200 U	890 U
4-Bromophenyl phenyl ether				140 U	98 U	91 U	390 U	130 U	130 U	130 U	97 U	71 U	95 U	71 U	80 U	150 UJ	140 U	140 U	140 U	110 U	99 U	85 U	120 U	89 U
4-Chloro-3-methylphenol				350 U	240 U	230 U	970 U	330 U	320 U	320 U	240 U	180 U	240 U	180 U	200 U	380 U	350 U	360 U	340 U	270 U	250 U	210 U	290 U	220 U
4-Chloroaniline				350 U	240 U	230 U	970 U	330 U	320 U	320 U	240 U	180 U	240 U	180 U	200 U	380 U	350 U	360 U	340 U	270 U	250 U	210 U	290 U	220 U
4-Chlorophenyl phenyl ether				140 U	98 U	91 U	390 U	130 U	130 U	130 U	97 U	71 U	95 U	71 U	80 U	150 UJ	140 U	140 U	140 U	110 U	99 U	85 U	120 U	89 U
4-Nitroaniline				350 U	240 U	230 U	970 U	330 U	320 U	320 U	240 U	180 U	240 U	180 U	200 U	380 UJ	350 U	360 U	340 U	270 U	250 U	210 U	290 U	220 U
4-Nitrophenol				700 U	490 U	450 U	1900 U	660 U	650 U	650 U	490 U	360 U	480 U	350 U	400 U	750 UJ	710 U	710 U	680 U	530 U	490 U	420 U	590 U	450 U
Acenaphthene		20,000		63.2 J	50.1	58	1730	57.9 J	1390	65 U	63.2	305	48 U	35 U	88.7	3400 J	551	71 U	68 U	90.2	49 U	1510	23.3 J	1310
Acenaphthylene		100,000		70 U	49 U	34 J	190 U	66 U	65 U	53.7 J	49 U	36 U	48 U	19.3 J	40 U	75 UJ	97.4	103	68 U	53 U	49 U	42 U	59 U	45 U
Acetophenone				350 U	240 U	230 U	970 U	330 U	320 U	320 U	240 U	180 U	240 U	180 U	200 U	380 U	350 U	360 U	340 U	270 U	250 U	210 U	290 U	220 U
Anthracene		100,000		101	88.3	81.6	2600	65.3 J	65 U	119	40.1 J	36 U	48 U	17.8 J	285	75 UJ	519	71 U	68 U	138	49 U	189	25.2 J	45 U
Atrazine				350 U	240 U	230 U	970 U	330 U	320 U	320 U	240 U	180 U	240 U	180 U	200 U	380 U	350 U	360 U	340 U	270 U	250 U	210 U	290 U	220 U
Benzaldehyde				350 U	240 U	230 U	970 U	330 U	320 U	320 U	240 U	180 U	240 U	180 U	200 U	380 U	350 U	360 U	340 U	110 J	250 U	210 U	290 U	220 U
Benzo[a]anthracene		1,000		126	135	206	3350	167	86.8	288	124	72	84.4	73.8	370	210 J	797 J	380	61.3 J	647	34.9 J	92.5	25 J	209
Benzo[a]pyrene		1,000		93.9	89.5	143	2360	114	77.8	255	173	67.2	66.8 J	71.6	265	199 J	793 J	451	68 U	562	32.2 J	96	59 U	185
Benzo[b]fluoranthene		1,000		99.6	162	233	1300	98.9	74.8	213	161	75.8	92.6 J	152	324	257 J	1160 J	506	68 U	567	38.7 J	145	59 U	232
Benzo[g,h,i]perylene		100,000		62.6 J	55.8	102	1820	91.3	61.5 J	188	122	44.3	46.4 J	66.9	152	134 J	441 J	284	68 U	321	49 U	104	59 U	132
Benzo[k]fluoranthene		800		65.2 J	49 U	34 J	467	49.3 J	53.7 J	234	85.6	29 J	48 UJ	65.7	117	65.7 J	380 J	351	68 U	357	49 U	46.6	59 U	71.6
Bis(2-chloroethoxy)methane				140 U	98 U	91 U	390 U	130 U	130 U	130 U	97 U	71 U	95 U	71 U	80 U	150 U	140 U	140 U	140 U	110 U	99 U	85 U	120 U	89 U
Bis(2-chloroethyl) ether				140 U	98 U	91 U	390 U	130 U	130 U	130 U	97 U	71 U	95 U	71 U	80 U	150 U	140 U	140 U	140 U	110 U	99 U	85 U	120 U	89 U
Bis(2-ethylhexyl) phthalate				140 U	98 U	91 U	390 U	130 U	96.7 J	130 U	97 U	71 U	95 U	71 U	80 U	150 UJ	1810 J	140 U	465	612	81.1 J	189	70.6 J	603
Butylbenzyl phthalate				140 U	98 U	91 U	390 U	130 U	130 U	130 U	97 U	71 U	95 U	71 U	80 U	150 UJ	140 UJ	140 U	140 U	110 U	99 U	85 U	120 U	89 U
Caprolactam				140 U	98 U	91 U	390 U	130 U	130 U	130 U	97 U	71 U	95 U	71 U	80 U	150 U	140 U	140 U	140 U	110 U	99 U	85 U	120 U	89 U
Carbazole				140 U	98 U	91 U	390 U	130 U	130 U	130 U	97 U	71 U	95 U	71 U	24.5 J	150 UJ	101 J	140 U	140 U	82.7 J	99 U	85 U	120 U	89 U
Chrysene		1,000		122	207	262	5330	257	157	361	158	24.7 J	48.6	80.8	355	130 J	1050 J	485	98.8	638	49 U	74.4	59 U	305
Dibenzo[a,h]anthracene		330		70 U	49 U	28.9 J	190 U	66 U	65 U	96.6	53.8	36 U	48 UJ	23.6 J	52.9	75 UJ	199 J	147	68 U	140	49 U	52.4	59 U	45 U
Dibenzofuran				140 U	98 U	23.8 J	1090	26.6 J	726	130 U	97 U	142	95 U	71 U	57.7 J	150 UJ	259	140 U	140 U	110 U	99 U	739	24.7 J	616
Diethyl phthalate				140 U	98 U	91 U	390 U	130 U	130 U	130 U	97 U	71 U	95 U	71 U	80 U	150 UJ	140 U	140 U	140 U	110 U	99 U	85 U	120 U	89 U
Dimethyl phthalate				281	98 U	91 U	390 U	130 U	130 U	130 U	97 U	71.2	402	71 U	80 U	150 UJ	343	179	141	110 U	99 U	85 U	120 U	89 U
Di-n-butyl phthalate				130 J	98 U	91 U	390 U	130 U	130 U	130 U	97 U	71 U	95 U	71 U	80 U	150 UJ	140 U	140 U	140 U	110 U	99 U	85 U	120 U	89 U
Di-n-octyl phthalate				140 U	98 U	91 U	390 U	130 U	130 U	130 U	97 U	71 U	95 UJ	71 U	80 U	150 UJ	140 UJ	140 U	140 U	110 U	99 U	85 U	120 U	89 U
Diphenyl				140 U	98 U	91 U	1510	130 U	130 U	130 U	97 U	73	95 U	71 U	80 U	150 UJ	140 U	140 U	140 U	110 U	99 U	85 U	120 U	607
Fluoranthene		100,000		310	71.4	228	2280	175	187	439	190	141	99	110	1050	614 J	1770	331	65.7 J	893	64.4	289	50.7 J	491
Fluorene		30,000		58.2 J	33.5 J	109	3810	76.4	1930	65 U	51.4	398	32 J	35 U	87.6	4600 J	863	55.2 J	68 U	53 U	40.3 J	1920	48.2 J	1420
Hexachlorobenzene				140 U	98 U	91 U	390 U	130 U	130 U	130 U	97 U	71 U	95 U	71 U	80 U	150 UJ	140 U	140 U	140 U	110 U	99 U	85 U	120 U	89 U
Hexachlorobutadiene				70 U	49 U	45 U	190 U	66 U	65 U	65 U	49 U	36 U	48 U	35 U	40 U	75 U	71 U	71 U	68 U	53 U	49 U	42 U	59 U	45 U
Hexachlorocyclopentadiene				1400 U	980 U	910 U	3900 U	1300 U	1300 U	1300 U	970 U	710 U	950 U	710 U	800 U	1500 UJ	1400 U	1400 U	1400 U	1100 U	990 U	850 U	1200 U	890 U
Hexachloroethane				350 U	240 U	230 U	970 U	330 U	320 U	320 U	240 U	180 U	240 U	180 U	200 U	380 U	350 U	360 U	340 U	270 U	250 U	210 U	290 U	220 U
Indeno[1,2,3-cd]pyrene		500		51.8 J	24.8 J	83.6	664	64.2 J	43.9 J	165	113	38.9	46.5 J	61.9	145	131 J	421 J	296	68 U	300	49 U	91.5	59 U	112
Isophorone				140 U	98 U	91 U	390 U	130 U	130 U	130 U	97 U	71 U	95 U	71 U	80 U	150 U	140 U	140 U	140 U	110 U	99 U	85 U	120 U	89 U
Naphthalene		12,000		52.7 J	49 U	23.6 J	2200	60.6 J	65 U	263	42.6 J	268	126	35 U	24.9 J	75 U	255	148	68 U	53 U	49 U	520	37.5 J	2590
Nitrobenzene				140 U	98 U	91 U	390 U	130 U	130 U	130 U	97 U	71 U	95 U	71 U	80 U	150 U	140 U	140 U	140 U	110 U	99 U	85 U	120 U	89 U
n-Nitrosodi-n-propylamine				140 U	98 U	91 U	390 U	130 U	130 U	130 U	97 U	71 U	95 U	71 U	80 U	150 U	140 U	140 U	140 U	110 U	99 U	85 U	120 U	89 U
n-Nitrosodiphenylamine				350 U	240 U	230 U	970 U	330 U	320 U	320 U	240 U	180 U	240 U	180 U	200 U	380 UJ	350 U	360 U	340 U	270 U	250 U	210 U	290 U	220 U
Pentachlorophenol		800		700 U	490 U	450 U	1900 U	660 U	650 U	650 U	490 U	360 U	480 U	350 U	400 U	750 UJ	710 U	710 U	680 U	530 U	490 U	420 U	590 U	450 U
Phenanthrene		100,000		98.9	47.4 J	436	12100	169	6150	334	239	657	31.5 J	34.1 J	967	8200	3040	59.3 J	75.3	425	89.3	6650	145	4390
Phenol		330		130 J	98 U	91 U	390 U	130 U	130 U	130 U	97 U	71 U	95 U	71 U	80 U	150 U	140 U	140 U	140 U	110 U	99 U	85 U	120 U	89 U
Pyrene		100,000		227	255	349	9320	363	249	485	248	154	159	93.5	814	631 J	1980 J	437	141	869	71.5	278	51.5 J	683
Total SVOC (in mg/kg)	500			2.0731	1.2198	2.6415	52.99	1.9017	12.0022	4.0616	1.9677	2.9571	1.3518	0.871	5.2206	18.5717	16.9304	4.3125	1.0481	6.9289	0.5654	14.0364	0.6017	26.5566

B - Analyte in associated blank
J - Estimated value
U - Indicates that the compound was analyzed for but not detected
DUP - Duplicate sample
µg/kg - Micrograms per kilogram
ft bls - Feet below land surface
mg/kg - Milligrams per kilogram
SVOC - Semivolatile Organic Compounds
Value exceeds or potentially exceeds NYSDEC SCO for Unrestricted Use Criteria.

Table 3
Criteria for On-Site Reuse of Excavated Materials or Imported Soils*

Site Management Plan
Former Mobil Tappan Terminal, Soil Cap for AOC 1 (Western Parcel)
Village of Hastings on Hudson, Westchester County, New York
Site No. 3-60-015

Location	Criteria
Within 6 inches of grade; and Within 50 horizontal feet from shore	SCOs for Restricted Residential Site Use; SCOs for Protection of Ecological Resources; and Plantable Soil (6 - 20% by weight of fine textured stable organic material)
Within 6 inches of grade; and Greater than 50 horizontal feet from shore	SCOs for Restricted Residential Site Use; and Plantable Soil (6 - 20% by weight of fine textured stable organic material)
Within 6 to 24 inches below grade; and Within 50 horizontal feet from shore	SCOs for Restricted Residential Site Use; and SCOs for Protection of Ecological Resources
Within 6 to 24 inches below grade; and Greater than 50 horizontal feet from shore	SCOs for Restricted Residential Site Use
Greater than 24 inches below grade	Soil is not Grossly Impacted; Total SVOCs are less than 500 PPM; and Covered by a demarcation warning layer
Utility Corridors	SCOs for Unrestricted Use

Legend:
PPM = Parts Per Million
SCOs = Soil Cleanup Objectives per 6 NYCRR Subpart 375-6
SVOC = Semivolatile Organic Compound

* Documentation of the fill source will be provided to the NYSDEC for approval before use on-site in accordance with DER-10 Technical Guidance for Site Investigation and Remediation Sections 5.4(e)5 - 6 and Table 5.4(e)10. All fill material brought to the Site will meet the requirements for the identified Site use as set forth in 6 NYCRR Part 375-6.7(d). Imported soil (sand, stone, and topsoil) must be free of odors and sheens. Any imported material with visually identified contamination and/or odors will be segregated and tested before being used as part of the soil cover.

FIGURES

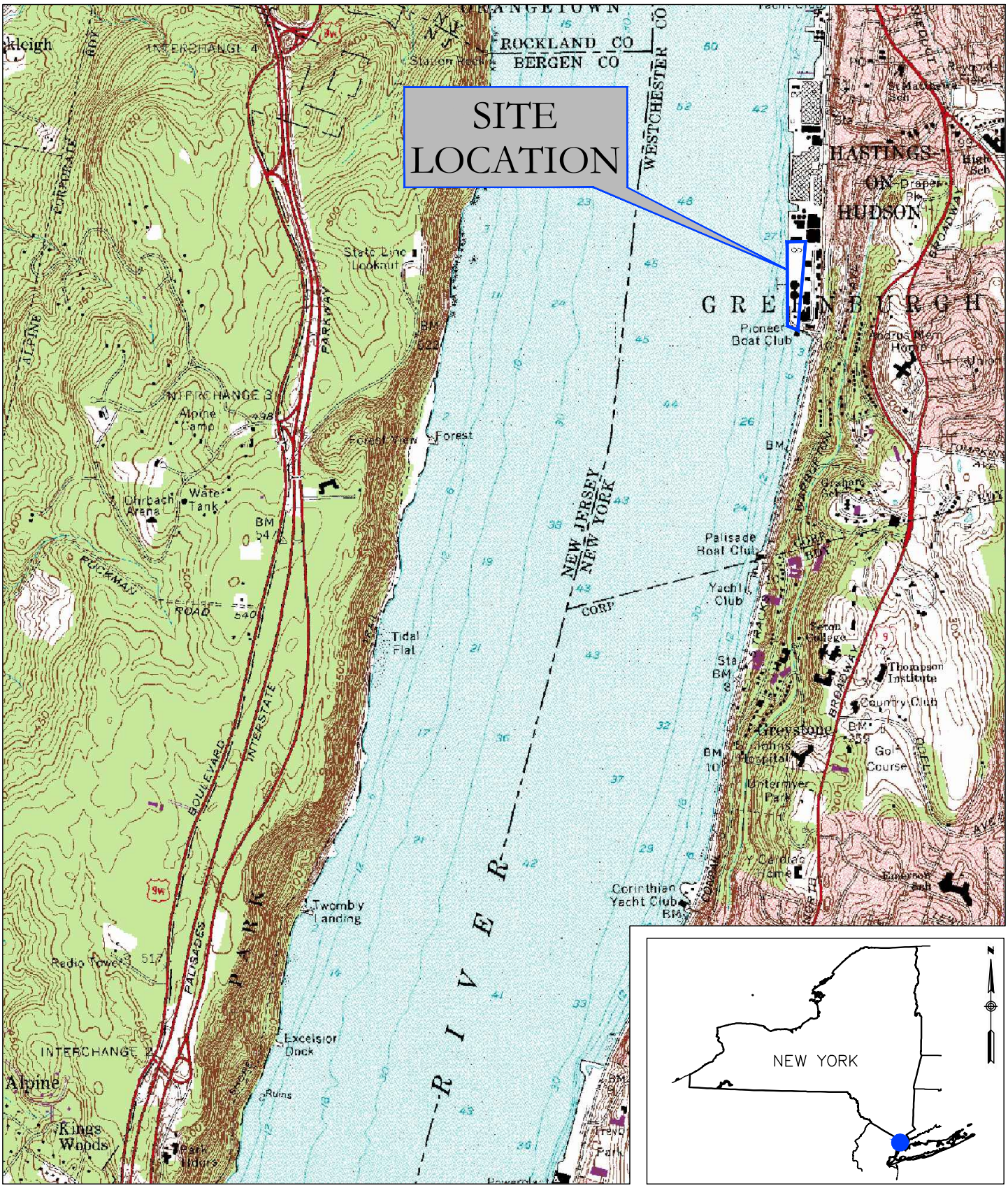

WOODARD & CURRAN

709 WESTCHESTER AVE., SUITE L2
WHITE PLAINS, NEW YORK 10604
800.426.4262 | www.woodardcurran.com

COMMITMENT & INTEGRITY DRIVE RESULTS

SITE LOCATION MAP

DESIGNED BY: JR	CHECKED BY: AP
DRAWN BY: PFF	206925_U1-RDRAR.dwg

FORMER MOBIL TAPPAN TERMINAL
HASTINGS-ON-HUDSON, NY

TOPO! INTERACTIVE MAPS ON CD
U.S.G.S YONKERS, NY.
7.5 MIN SERIES 1966 PHOTOREVISED 1979

JOB NO: 206925.03
DATE: MAY 2011
SCALE: AS NOTED

FIGURE 1

24x36 SHEET
1:2.26

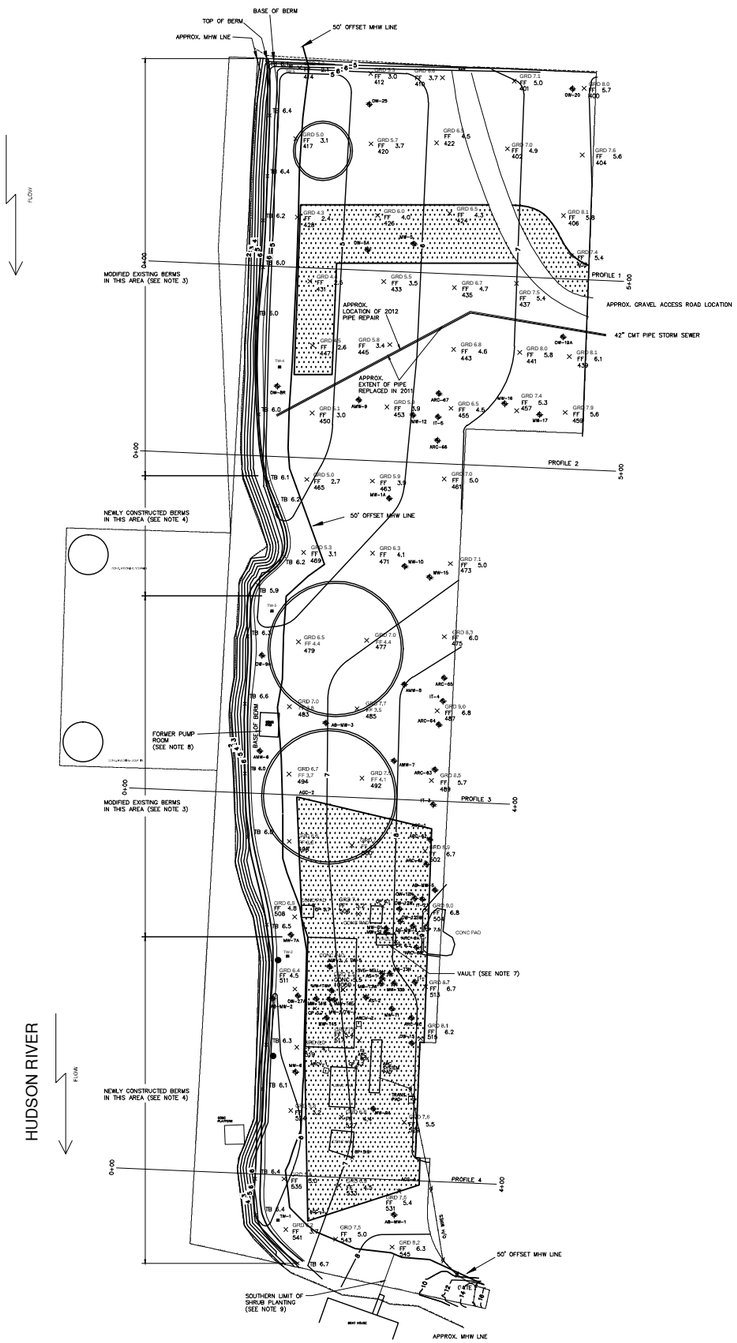

LEGEND

GRD 7.0 FF 4.4 477	FINAL GRADE SPOT ELEVATION FILTER FABRIC SPOT ELEVATION SPOT ELEVATION DESIGNATION NUMBER
TB 6.0	TOP OF BERM SPOT ELEVATION
TW-2	PERMANENT SURVEY MONUMENT
	POWER POLE
ARC	ARCADIS
AGC	AMODIO'S GARDEN CENTER
8	FINAL GRADE DESIGN CONTOUR
	PROPERTY LINE
	42 INCH STORM SEWER
	APPROX. MEAN HIGH WATER (MHW)
	50 FOOT OFFSET FROM MHW
	TOP OF BERM
	BASE OF BERM
	EXISTING FENCE
	NEW FENCE AND GATE
	OVERHEAD WIRES
CP 5.7	SPOT ELEVATION BURIED CONC. PAD
	APPROX. AREA OF AGC TOPSOIL COVERAGE MEETING RESTRICTED RESIDENTIAL USE, OTHERWISE CAP MEETS UNRESTRICTED USE
	MANHOLE/CATCH BASIN ABANDONED IN PLACE (SEE NOTE 6)

NOTES:

1. TOPOGRAPHIC CONTOUR LINES SHOWN ARE DESIGN FINAL GRADE.
2. INTACT CONCRETE STRUCTURES, INCLUDING TANKS PADS, VAULTS, LOADING RACK AND MISC. STRUCTURES ARE SHOWN FOR FUTURE REFERENCE. ELEVATIONS OF CONCRETE STONE STRUCTURES ARE PROVIDED WHERE THEY ARE WITHIN TWO FEET OF FINAL GRADE.
3. MODIFIED EXISTING BERMS CONSIST OF EXISTING ONSITE MATERIAL TO APPROXIMATE ELEVATION FOUR, COVERED WITH FILTER FABRIC AND TWO FEET OF OFFSITE RIP RAP TO MATCH EXISTING RIP RAP TO APPROXIMATE ELEVATION SIX.
4. NEWLY CONSTRUCTED BERMS CONSIST OF OFFSITE 1/4 INCH MINUS MATERIAL TO APPROXIMATE ELEVATION FOUR, COVERED WITH FILTER FABRIC AND TWO FEET OF OFFSITE RIP RAP TO MATCH EXISTING RIP RAP TO APPROXIMATE ELEVATION SIX.
5. ALONG THE WESTERN PROPERTY LINE, CLEAN FILL EXTENDS FROM THE FINAL ONSITE CAP ELEVATION TO MEET EXISTING GRADE ON THE ADJACENT PROPERTY AT A 2H:1V SLOPE.
6. CONCRETE MANHOLES AND CATCH BASINS THAT WERE ENCOUNTERED DURING GRADING WERE ABANDONED IN PLACE BY DEMOLISHING THE CONCRETE COVER AND FILLING WITH ONSITE MATERIAL PRIOR TO CAPPING. IN GENERAL, THE LOCATIONS WERE NOT SURVEYED, EXCEPT WHERE SHOWN ON THE DRAWING.
7. CONCRETE VAULT THAT WAS ENCOUNTERED TO THE EAST OF THE FORMER LOADING RACK FOUNDATION WAS FILLED WITH OFFSITE STONE AND COVERED WITH TWO METAL ROAD PLATES PRIOR TO FINAL GRADING AND CAPPING.
8. PUMP ROOM LOCATED ALONG THE WESTERN PROPERTY BOUNDARY BETWEEN THE TWO LARGE FORMER TANK RINGS WAS ABANDONED IN PLACE BY DEMOLISHING THE COVER AND FILLING WITH ONSITE MATERIAL PRIOR TO CAPPING.
9. APPROXIMATELY 2,150 SHRUBS WERE PLANTED ON FIVE FOOT CENTERS (OR LESS) WITHIN 50 FEET FROM MHW FROM THE NORTHERN FENCELINE TO THE SOUTHERN LIMIT SHOWN ON THE DRAWING. SPECKLED ALDERS (~612 TOTAL) WERE PLANTED CLOSER TO THE RIP RAP BERMS AND BLACK CHOCKBERRIES (~1538 TOTAL) WERE PLANTED FURTHER FROM THE BERMS WITHIN THE PLANTING ZONE. THIS BUFFER AREA WAS SEEDED WITH THE APPROVED NEW ENGLAND CONSERVATION/WILDLIFE MIX.

HORIZONTAL DATUM NAD 83 NEW YORK STATE PLANE NY EAST ZONE US FEET
VERTICAL DATUM NAVD 88 US FEET

NOTE: THIS SURVEY IS FOR THE PURPOSE OF SHOWING IMPROVEMENTS AS OF THE DATE OF THIS SURVEY AND IS NOT TO BE RELIED UPON FOR THE FUTURE ESTABLISHMENT OF FENCE, BUILDING OR OTHER IMPROVEMENT LINES. SUBSURFACE CONDITIONS MAY NOT BE SHOWN. EASEMENTS, RIGHTS OF WAY AND OTHER LINES OF RECORD MAY NOT BE SHOWN.

Woodard & Curran Engineering PA PC
709 Westchester Avenue, Suite L2
White Plains, New York 10604
800.807.4080 | www.woodardcurran.com
COMMITMENT & INTEGRITY DRIVE RESULTS

THIS DOCUMENT IS THE PROPERTY OF WOODARD & CURRAN INC., AND ITS CLIENT. REPRODUCTION OR MODIFICATION WITHOUT WRITTEN PERMISSION IS PROHIBITED.

REV	DESCRIPTION	DATE
1	ADD RESTRICTED USE AREA	1-8-15

DESIGNED BY:
DRAWN BY:
CHECKED BY:
MPAR FINAL AS BUILT_BASEMAP.DWG

SITE PLAN AND BOUNDARIES

FORMER MOBIL TAPPAN TERMINAL
PROPERTY HASTINGS-ON-HUDSON,
WESTCHESTER COUNTY
FORMER TAPPAN TERMINAL NYSDEC
SITE NO. 3-60-015

SITE MANAGEMENT PLAN

JOB NO.: 206925.06
DATE: AUGUST 2013
SCALE: 1" = 70'
SHEET: OF

FIGURE
2

\\CHESHIRE\Projects\206925 ExxonMobil Tappan Terminal\wip\Final Remedial Design\As-Builts\tappan final as built_basemap.dwg, Jan 08, 2015 - 9:45am

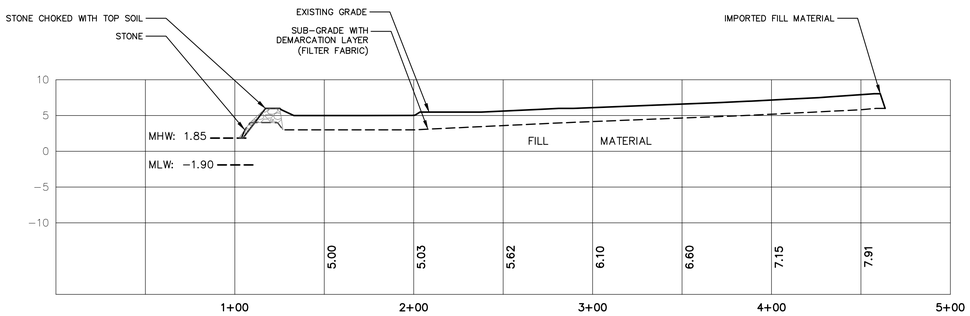

PROFILE 1 STA. 0+00 TO 5+00

HORIZONTAL SCALE: 1" = 40'
VERTICAL SCALE: 1" = 10'

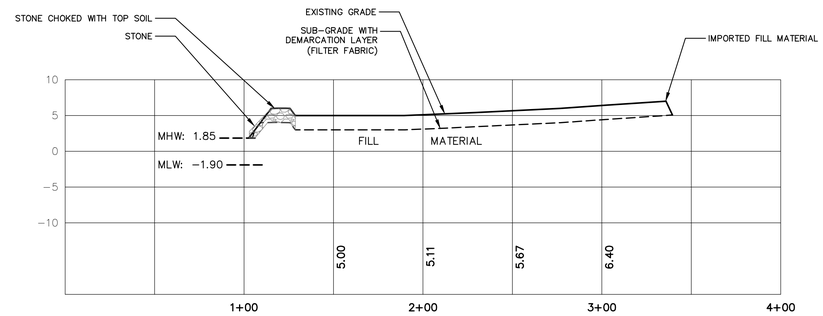

PROFILE 2 STA. 0+00 TO 5+00

HORIZONTAL SCALE: 1" = 40'
VERTICAL SCALE: 1" = 10'

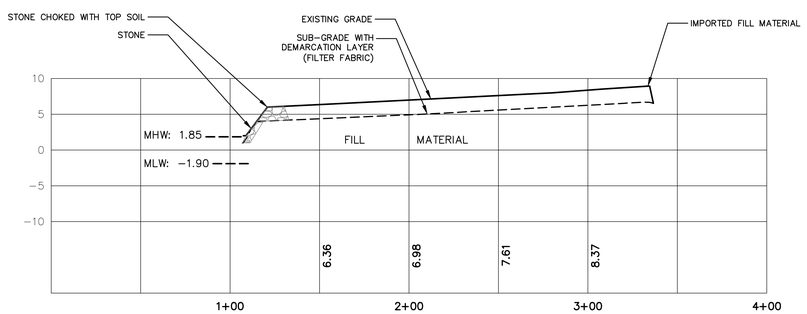

PROFILE 3 STA. 0+00 TO 5+00

HORIZONTAL SCALE: 1" = 40'
VERTICAL SCALE: 1" = 10'

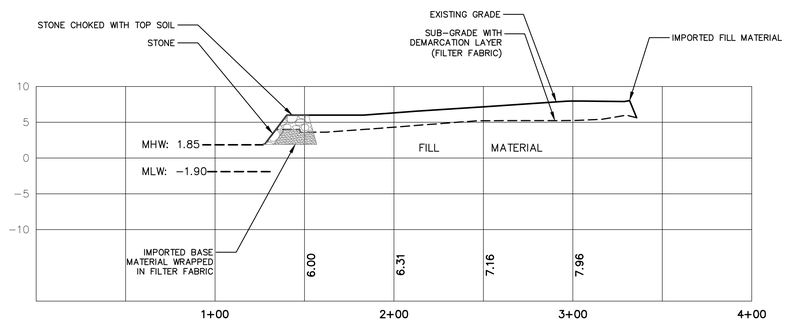

PROFILE 4 STA. 0+00 TO 5+00

HORIZONTAL SCALE: 1" = 40'
VERTICAL SCALE: 1" = 10'

NOTES:

1. MHW = MEAN HIGH WATER
2. MLW = MEAN LOW WATER
3. IMPORTED FILL MATERIAL = APPROXIMATELY 18" OF BASE MATERIAL (1/4" MINUS) AND 6" OF TOP SOIL.
4. DEPICTION OF SHORE LINE CONSTRUCTION IS APPROXIMATE AND PROVIDED FOR REFERENCE ONLY

Woodard & Curran Engineering PA PC
709 Westchester Avenue, Suite L2
White Plains, New York 10604
800.807.4080 | www.woodardcurran.com
COMMITMENT & INTEGRITY DRIVE RESULTS

THIS DOCUMENT IS THE PROPERTY OF WOODARD & CURRAN INC. AND ITS CLIENT. REPRODUCTION OR MODIFICATION WITHOUT WRITTEN PERMISSION IS PROHIBITED.

REV	DESCRIPTION	DATE
1	INDICATED FILL MATERIAL UNDER SOIL COVER SYSTEM	12/1/2015

DESIGNED BY:
DRAWN BY:
CHECKED BY:
TAPPAN FINAL AS BUILT_BASEMAP.DWG

GEOLOGIC CROSS-SECTIONS

FORMER MOBIL TAPPAN TERMINAL
PROPERTY HASTINGS-ON-HUDSON, NEW YORK
FORMER TAPPAN TERMINAL NYSDEC SITE NO. 3-60-015

SITE MANAGEMENT PLAN

JOB NO.: 206925.06
DATE: AUGUST 2013
SCALE: AS SHOWN
SHEET: OF

FIGURE 3

\\wc\shared\Projects\206925 ExxonMobil Tappan Terminal\wip\Final Remedial Design\As-Builts\tappan final as built_basemap.dwg, Dec 01, 2015 - 1:58pm

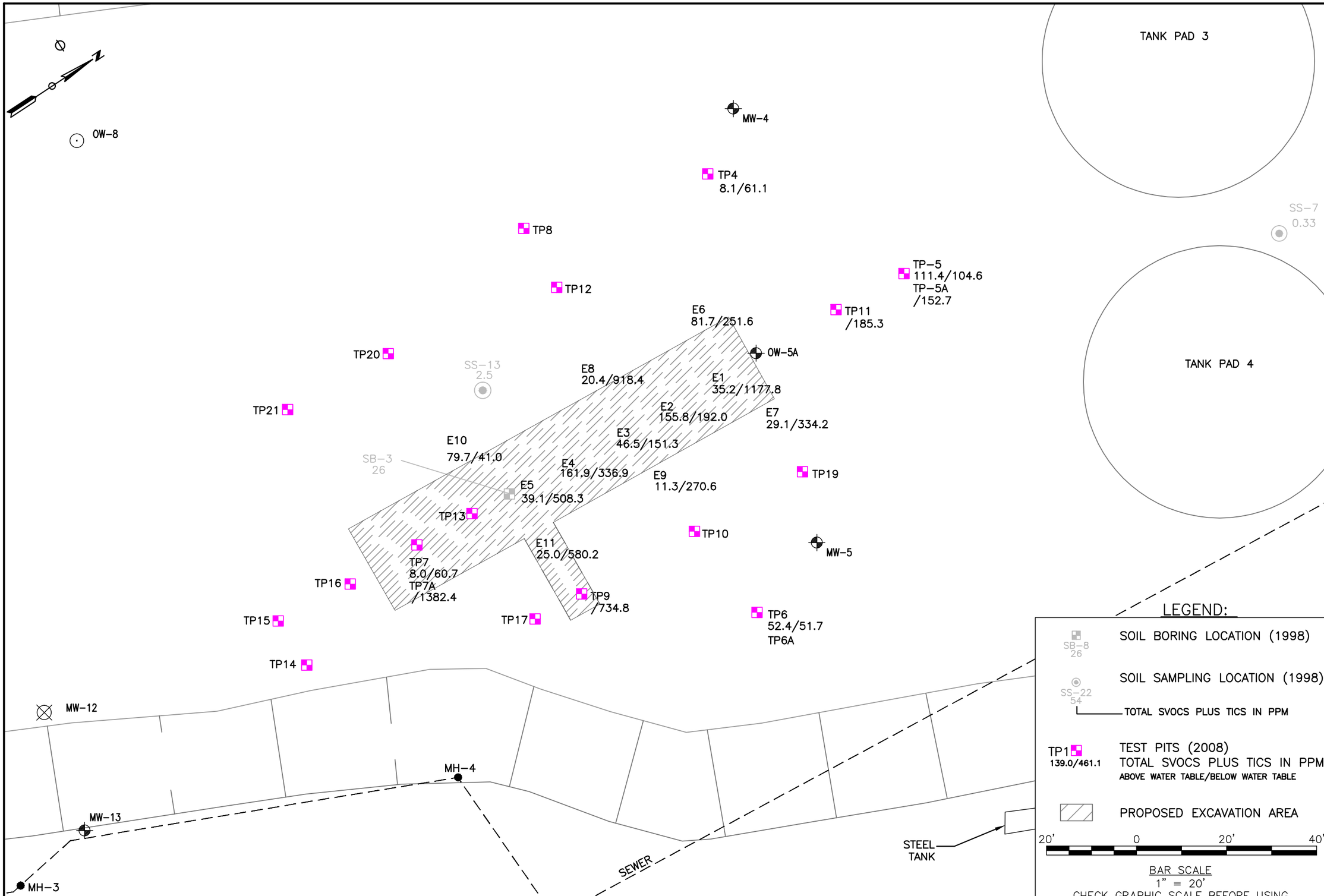

1520 HIGHLAND AVENUE
CHESHIRE CONNECTICUT 06410
888.265.8969 | www.woodardcurran.com

COMMITMENT & INTEGRITY DRIVE RESULTS

WOODARD & CURRAN

REMEDIAL INVESTIGATION SOIL CONTAMINATION SUMMARY

DESIGNED BY: AP
DRAWN BY: PF
CHECKED BY: AP
206925_U4.dwg

FORMER TAPPAN TERMINAL
HASTINGS-ON-HUDSON, NY

SITE MANAGEMENT PLAN

JOB NO: 206925.09
DATE: AUGUST 2013
SCALE: AS NOTED

FIGURE 4

206629/wip/fig

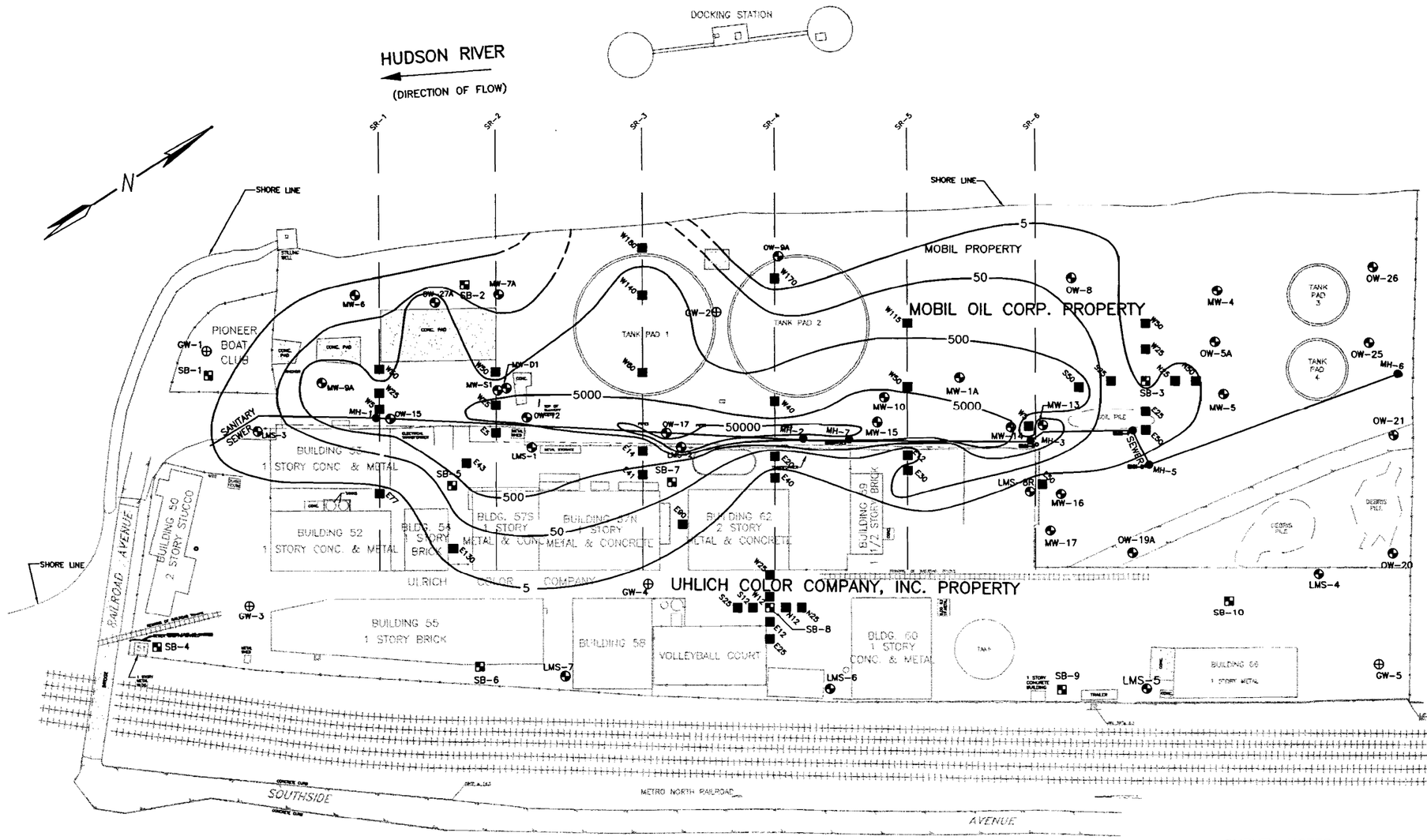

LEGEND

MW LMS OW	◐	MONITORING WELL
SB	◪	SUBSURFACE SOIL BORING
GW	⊕	GROUNDWATER SAMPLE
W50	■	DIRECT PUSH SAMPLE LOCATION
SR-2	———	INVESTIGATION LINE PERPENDICULAR TO SEWER PIPE
5		CHLOROBENZENE CONCENTRATION (ug/l)

SURVEY NOTES:

1. DATE OF FIELD SURVEY: DECEMBER 29, 1998
2. HORIZONTAL DATUM: MAGNETIC NORTH DECEMBER 1998
3. VERTICAL DATUM: NGVD FROM N.G.S. BENCHMARK

0 120
SCALE IN FEET

TAPPAN TERMINAL SITE
HASTINGS-ON-HUDSON, NEW YORK

Dvirka and Bartilucci
Consulting Engineers
A Division of William F. Cosulich Associates, P.C.

CHLOROBENZENE CONCENTRATIONS IN GROUNDWATER

FIGURE 5

DIR: 1570 FILE: 1570-23 (T.McC/5-28-00)

NOTES:

1. TEST PITS WERE COMPLETED AROUND THE EXCAVATION APPROXIMATELY 6 FEET FROM THE SIDEWALL LOCATION AT THE TIME OF THE TEST PIT TO COLLECT SIDEWALL AND BOTTOM SAMPLES.

2. THE SITE IS COMPRISED OF FILLED LAND AND ADDITION LOCATIONS MAY EXCEED OR POTENTIALLY EXCEED UNRESTRICTED USE CRITERIA FOR SVOCS OR OTHER CONSTITUENTS.

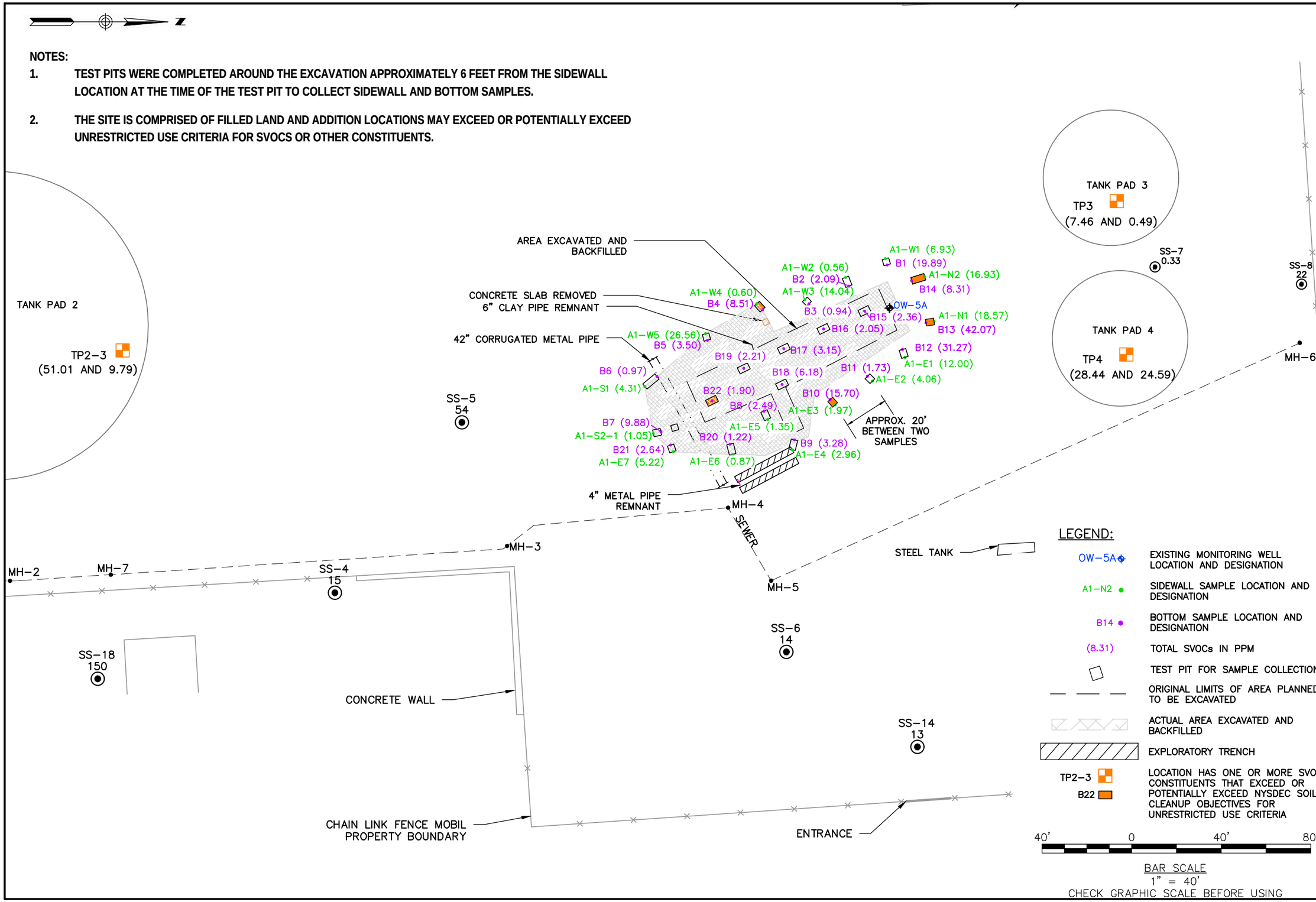

1520 HIGHLAND AVENUE
CHESHIRE CONNECTICUT 06410
888.265.8969 | www.woodardcurran.com
COMMITMENT & INTEGRITY DRIVE RESULTS
WOODARD & CURRAN

EXTENT OF REMEDIAL EXCAVATION AND LOCATION OF REMAINING SOIL ABOVE UNRESTRICTED LEVELS

DESIGNED BY: AP
DRAWN BY: PFF
CHECKED BY: AP
206925_U6–SMP.dwg

FORMER TAPPAN TERMINAL
HASTINGS–ON–HUDSON, NY

SITE MANAGEMENT PLAN

JOB NO: 206925.09
DATE: AUGUST 2013
SCALE: AS NOTED

FIGURE 6

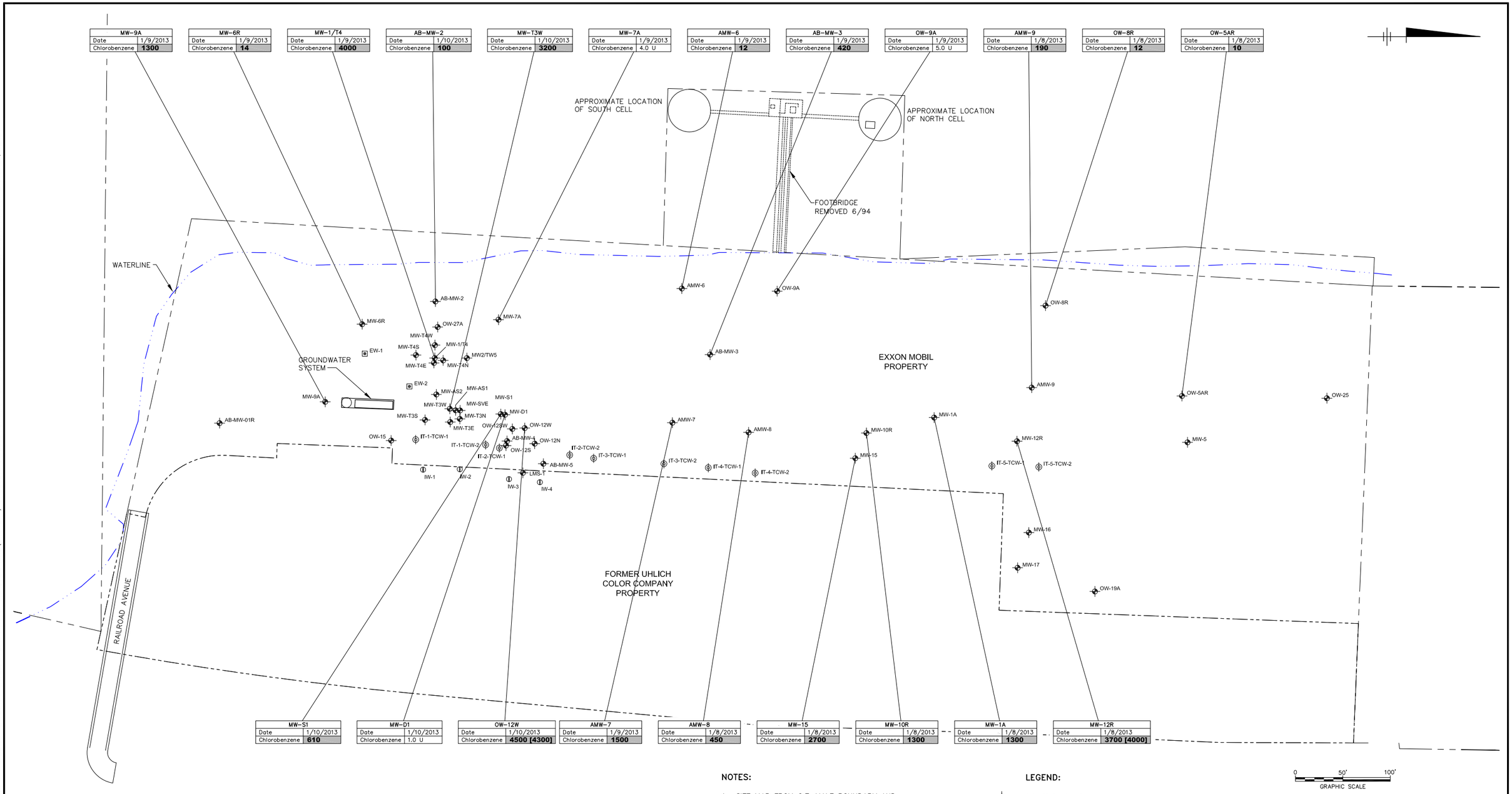

NOTES:

1. SITE MAP FROM C.T. MALE BOUNDARY AND TOPOGRAPHIC SURVEY, REVISED 4/11/13. ALL LOCATIONS ARE APPROXIMATE.
2. ALL RESULTS ARE IN MICROGRAMS PER LITER ($\mu g/L$).
3. D = CONCENTRATION BASED ON DILUTED ANALYSIS.
4. J = INDICATES AN ESTIMATED VALUE.
5. U = COMPOUND WAS ANALYZED FOR BUT WAS NOT DETECTED. THE ASSOCIATED VALUE IS THE COMPOUND QUANTITATION LIMIT.
6. DUPLICATE RESULTS ARE SHOWN IN SQUARE BRACKETS NEXT TO PARENT SAMPLE.
7. VALUES IN BOLD INDICATE THAT THE COMPOUND WAS DETECTED.
8. SHADED VALUES EXCEED NYSDEC STANDARDS.

LEGEND:

- MONITORING WELL
- TRENCH CLEANOUT
- INJECTION WELL
- EXTRACTION WELL
- PROPERTY LINE
- WATER LINE

CHEVRON ENVIRONMENTAL MANAGEMENT COMPANY
HASTINGS ON HUDSON, NEW YORK

CHLOROBENZENE IN GROUNDWATER

ARCADIS

FIGURE
7

CITY:SYRACUSE DIV/GROUP:IM/DV DB: R.BASSETT G.STOWELL, W.JONES PM:(Reqd) TM:(Opt) LYR:ON=*;OFF=REF
G:\ENVCAD\SYRACUSE\ACT\B0046918\0002\00002\DWG\46918C02.DWG LAYOUT: 4 SAVED: 6/4/2013 11:56 AM ACADVER: 18.1S (LMS TECH) PAGESETUP: C-LD2B-PDF-GMS PLOTSTYLETABLE: PLTFULL.CTB PLOTTED: 6/4/2013 11:56 AM BY: JONES, WENDY
XREFS: 46918X00 IMAGES: PROJECTNAME: ---

APPENDIX A

This property is subject to an environmental easement held by the New York State Department of Environmental Conservation pursuant to Title 36 of Article 71 of the New York Environmental Conservation Law. The engineering and institutional controls for this Easement are set forth in the Site Management Plan (SMP). A copy of the SMP must be obtained by any party with an interest in the property. The SMP can be obtained from NYS Department of Environmental Conservation, Division of Environmental Remediation, Site Control Section, 625 Broadway, Albany, NY 12233 or at derweb@dec.ny.gov .

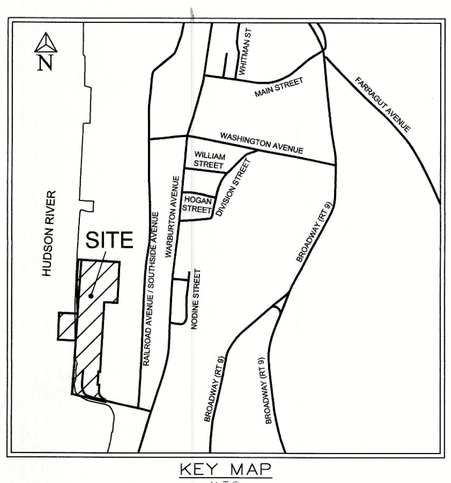

KEY MAP
N.T.S.

SCHEDULE A DESCRIPTION

ALL THAT CERTAIN LOT, PIECE OR PARCEL OF LAND, SITUATE, LYING AND BEING IN THE VILLAGE OF HASTINGS-ON-HUDSON, TOWN OF GREENBURGH, COUNTY OF WESTCHESTER AND STATE OF NEW YORK, BEING BOUNDED AND DESCRIBED AS FOLLOWS:

BEGINNING AT A POINT ON THE DIVISION LINE BETWEEN LAND NOW OR FORMERLY BELONGING TO ANACONDA WIRE AND CABLE CO., FORMERLY NATIONAL CONDUIT AND CABLE CO. AND CHAS. T. CROMWELL, ON THE NORTH AND TAPPAN TANKER TERMINAL INC., ON THE SOUTH WHICH SAID POINT IS DISTANT, AS MEASURED ALONG SAID DIVISION LINE, NORTH 87° 24' 00" WEST 126.00 FEET, FROM A POINT ON THE WESTERLY RIGHT OF WAY LINE OF THE PENN CENTRAL RAILROAD, FORMERLY NEW YORK CENTRAL RAILROAD, WHICH SAID LAST MENTIONED POINT IS DISTANT SOUTH 65° 05' 30" WEST 36.48 FEET FROM THE STONE MONUMENT MARKING THE POINT OF CURVE OF CURVE NO. 34 OF THE ORIGINAL CENTER LINE OF SAID RAILROAD;

RUNNING THENCE FROM SAID POINT OF BEGINNING THROUGH LANDS OF THE TAPPAN TANKER TERMINAL INC. THE FOLLOWING COURSES AND DISTANCES:

SOUTH 2° 15' 46" WEST 379.40 FEET,
NORTH 87° 44' 14" WEST 123.01 FEET AND
SOUTH 2° 57' 36" WEST 646.16 FEET TO THE NORTHERLY SIDE OF A TWO STORY BRICK AND FRAME BUILDING;

THENCE ALONG THE NORTHERLY, WESTERLY AND SOUTHERLY FACE OF SAID TWO STORY BRICK AND FRAME BUILDING:

NORTH 87° 31' 13" WEST 16.41 FEET,
SOUTH 2° 28' 47" WEST 121.70 FEET AND
SOUTH 87° 31' 13" EAST 15.39 FEET;

THENCE SOUTH 2° 57' 36" WEST 53.01 FEET TO A POINT OF CURVE;

THENCE ON A CURVE TO THE LEFT HAVING A RADIUS OF 82.97 FEET, A DISTANCE OF 116.71 FEET AND SOUTH 12° 31' 45" WEST 20.00 FEET TO A POINT IN THE SOUTHERLY BOUNDARY LINE OF LAND BELONGING TO TAPPAN TANKER TERMINAL INC., DISTANT AS MEASURED ALONG THE SAME NORTH 77° 28' 15" WEST 147.24 FEET FROM THE WESTERLY RIGHT OF WAY LINE OF SAID RAILROAD;

THENCE INTO THE WATERS OF THE HUDSON RIVER, NORTH 77° 28' 15" WEST 318.00 FEET AND NORTH 3° 24' 00" EAST 1248.43 FEET TO THE DIVISION LINE FIRST HEREINABOVE REFERRED TO;

THENCE ALONG THE SAID DIVISION LINE, SOUTH 87° 24' 00" EAST 356.33 FEET TO THE POINT AND PLACE OF BEGINNING.

SAID PROPERTY CONTAINING APPROXIMATELY 8.088 ACRES MORE OR LESS.

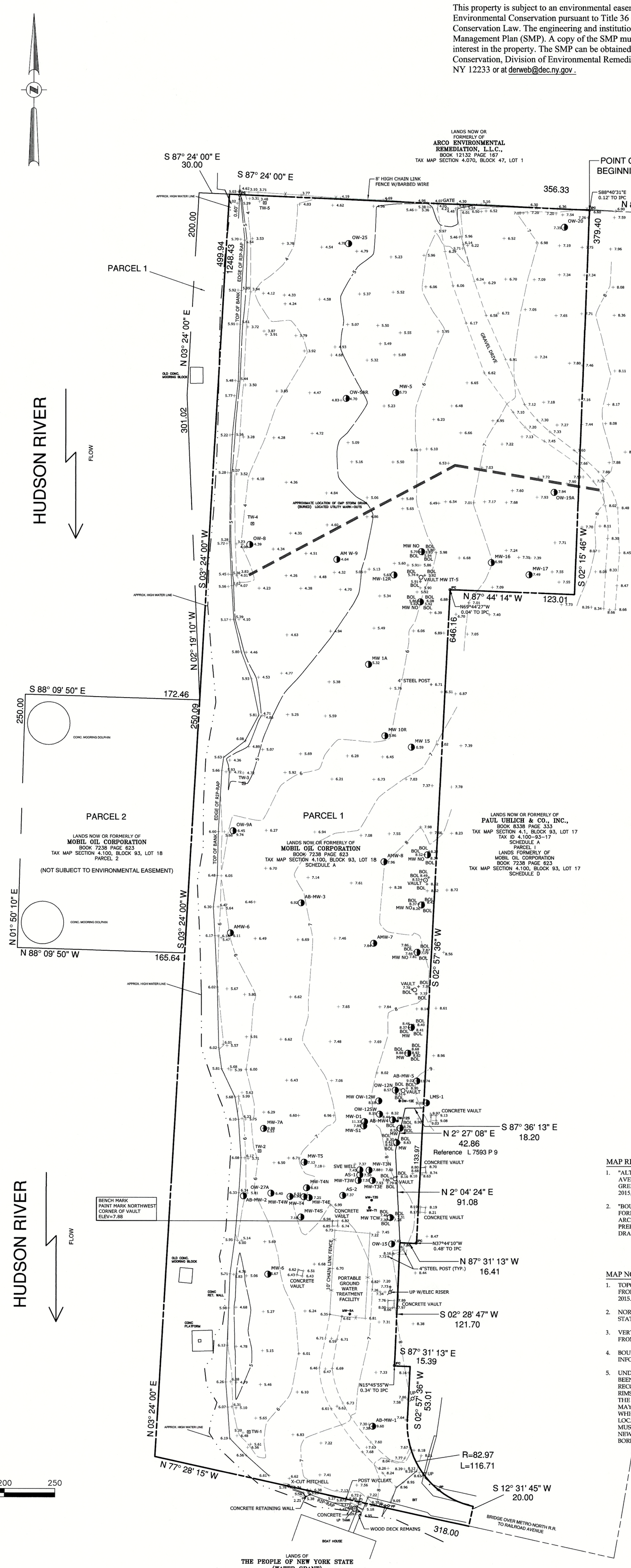

MAP REFERENCES:

1. "ALTA/ACSM LAND TITLE SURVEY MAP OF PROPERTY #0 SOUTHSIDE AVENUE SITUATE AT VILLAGE OF HASTINGS ON HUDSON, TOWN OF GREENBURGH, WESTCHESTER COUNTY, NEW YORK", DATED APRIL 2015, PREPARED BY ANGLE OF ATTACK LAND SURVEYORS, LLC.
2. "BOUNDARY AND TOPOGRAPHIC SURVEY LANDS NOW OR FORMERLY OF PAUL UHLICH & COMPANY, INC. PREPARED FOR ARCADIS", DATED JANUARY 10, 2011, LAST REVISED APRIL 11, 2013, PREPARED BY C.T. MALE ASSOCIATES, P.C., PROJECT NO. 10.1472, DRAWING NO. 11-106.

MAP NOTES:

1. TOPOGRAPHIC INFORMATION SHOWN HEREON WAS COMPILED FROM AN ACTUAL FIELD SURVEY CONDUCTED ON SEPTEMBER 24, 2015.
2. NORTH ORIENTATION IS GRID NORTH BASED ON THE NEW YORK STATE PLANE COORDINATE SYSTEM, EAST ZONE, NAD83.
3. VERTICAL DATUM SHOWN HEREON IS NAVD 88 AND WAS OBTAINED FROM GPS OBSERVATIONS.
4. BOUNDARY INFORMATION SHOWN HEREON WAS COMPILED FROM INFORMATION AS SHOWN ON MAP REFERENCE NO. 1.
5. UNDERGROUND FACILITIES, STRUCTURES, AND UTILITIES HAVE BEEN PLOTTED FROM DATA OBTAINED FROM PREVIOUS MAPS AND RECORD DRAWINGS. SURFACE FEATURES SUCH AS CATCH BASIN RIMS, MANHOLE COVERS, WATER VALVES, GAS VALVES, ETC. ARE THE RESULT OF FIELD SURVEY UNLESS NOTED OTHERWISE. THERE MAY BE OTHER UNDERGROUND UTILITIES, THE EXISTENCE OF WHICH IS NOT KNOWN TO THE UNDERSIGNED. SIZE AND LOCATION OF ALL UNDERGROUND UTILITIES AND STRUCTURES MUST BE VERIFIED BY THE APPROPRIATE AUTHORITIES. DIG SAFELY NEW YORK MUST BE NOTIFIED PRIOR TO CONDUCTING TEST BORINGS, EXCAVATION AND CONSTRUCTION.

10m 0 10m 20m
1:10 METERS

50 0 50 100 150 200 250
SCALE: 1" = 50'

LEGEND

CONC	CONCRETE
MW	MONITORING WELL
	UTILITY MANHOLE
PP UP	POWER POLE
	GUY WIRE
	CHAIN LINK FENCE
IPC	IRON PIN W/CAP
	DROP INLET
ASM1	BORING LOCATION
BOL	BOLLARD
FOUND.	FOUNDATION
RET. WALL	RETAINING WALL
R.R.	RAILROAD
TW-1	PERMANENT SURVEY MONUMENT

"ONLY COPIES OF THIS MAP SIGNED IN RED INK AND EMBOSSED WITH THE SEAL OF AN OFFICER OF C.T. MALE ASSOCIATES OR A DESIGNATED REPRESENTATIVE SHALL BE CONSIDERED TO BE A VALID TRUE COPY".

JAMES F. COOK
P.L.S. NO. 49260

STATE OF NEW YORK · JAMES F. COOK · 049260 · LICENSED LAND SURVEYOR

DATE		REVISIONS RECORD/DESCRIPTION	DRAFTER	CHECK	APPR.
12/16/15	1	REVISIONS PER DEC COMMENTS	GLB	JFC	WJN
	2				
	3				
	4				
	5				
	6				
	7				
	8				
	9				

UNAUTHORIZED ALTERATION OR ADDITION TO THIS DOCUMENT IS A VIOLATION OF THE NEW YORK STATE EDUCATION LAW.

© 2015
C.T. MALE ASSOCIATES

APPROVED: WJN
DRAFTED : GLB
CHECKED : JFC
PROJ. NO : 15.5531
SCALE : 1" = 50'
DATE : OCT. 7, 2015

TOPOGRAPHIC SURVEY

Lands Now or Formerly of

EXXON MOBIL OIL CORPORATION

#1 RAILROAD AVENUE
VILLAGE OF HASTING ON HUDSON
TOWN OF GREENBURGH
WESTCHESTER COUNTY, NEW YORK

C.T. MALE ASSOCIATES
Engineering, Surveying, Architecture & Landscape Architecture, D.P.C.
50 CENTURY HILL DRIVE, LATHAM, NY 12110
518.786.7400 * FAX 518.786.7299

SHEET 1 OF 1
DWG. NO: 15-544

APPENDIX B

The Office of the Westchester County Clerk: This page is part of the instrument; the County Clerk will rely on the information provided on this page for purposes of indexing this instrument. To the best of submitter's knowledge, the information contained on this Recording and Endorsement Cover Page is consistent with the information contained in the attached document.

560413480EAS002V

Westchester County Recording & Endorsement Page

Submitter Information

Name:	TRIBOROUGH LAND SERVICES	Phone:	631 385 8844
Address 1:	1121 OLD WALT WHITMAN ROAD SUITE 200	Fax:	631 3858298
Address 2:	*******PICK UP CY RECORDINGS****	Email:	STEPHANIE@TRIBOROUGHLS.COM
City/State/Zip:	MELVILLE NY 11747	Reference for Submitter:	CTSY-917139W

Document Details

Control Number: **560413480** Document Type: **Easement (EAS)**

Package ID: 2016021000244001001 Document Page Count: **9** Total Page Count: **10**

Parties

☐ Additional Parties on Continuation page

1st PARTY		2nd PARTY	
1: EXXONMOBIL OIL CORP	- Other	1: NEW YORK STATE OF	- Other
2:		2:	

Property

☐ Additional Properties on Continuation page

Street Address: 0 SOUTHSIDE AVE Tax Designation: 4.100-93-18

City/Town: GREENBURGH Village: HASTINGS-ON-HUDSON

Cross- References

☐ Additional Cross-Refs on Continuation page

1: 2: 3: 4:

Supporting Documents

1: TP-584

Recording Fees

Statutory Recording Fee:	$40.00
Page Fee:	$50.00
Cross-Reference Fee:	$0.00
Mortgage Affidavit Filing Fee:	$0.00
RP-5217 Filing Fee:	$0.00
TP-584 Filing Fee:	$5.00
Total Recording Fees Paid:	**$95.00**

Transfer Taxes

Consideration:	$0.00
Transfer Tax:	$0.00
Mansion Tax:	$0.00
Transfer Tax Number:	8975

Mortgage Taxes

Document Date:

Mortgage Amount:

Basic:	$0.00
Westchester:	$0.00
Additional:	$0.00
MTA:	$0.00
Special:	$0.00
Yonkers:	$0.00
Total Mortgage Tax:	**$0.00**

Dwelling Type: Exempt: ☐

Serial #:

RECORDED IN THE OFFICE OF THE WESTCHESTER COUNTY CLERK

WESTCHESTER COUNTY SEAL

Recorded: 02/12/2016 at 02:24 PM

Control Number: **560413480**

Witness my hand and official seal

Timothy C.Idoni
Westchester County Clerk

Record and Return To

☐ Pick-up at County Clerk's office

MCCUSTER ANSELMI ROSEN
210 PARK AVENUE SUITE 301

FLORHAM PARK , NJ 07932
Attn: TALI MOUSSERIE, ESQ

CF34-917139

ENVIRONMENTAL EASEMENT GRANTED PURSUANT TO ARTICLE 71, TITLE 36 OF THE NEW YORK STATE ENVIRONMENTAL CONSERVATION LAW

THIS INDENTURE made this 3RD day of FEBRUARY, 2016, between Owner(s) ExxonMobil Oil Corporation, having an office at 3225 Gallows Road, Fairfax, Virginia 22037, County of Fairfax, State of Virginia (the "Grantor"), and The People of the State of New York (the "Grantee."), acting through their Commissioner of the Department of Environmental Conservation (the "Commissioner", or "NYSDEC" or "Department" as the context requires) with its headquarters located at 625 Broadway, Albany, New York 12233,

WHEREAS, the Legislature of the State of New York has declared that it is in the public interest to encourage the remediation of abandoned and likely contaminated properties ("sites") that threaten the health and vitality of the communities they burden while at the same time ensuring the protection of public health and the environment; and

WHEREAS, the Legislature of the State of New York has declared that it is in the public interest to establish within the Department a statutory environmental remediation program that includes the use of Environmental Easements as an enforceable means of ensuring the performance of operation, maintenance, and/or monitoring requirements and the restriction of future uses of the land, when an environmental remediation project leaves residual contamination at levels that have been determined to be safe for a specific use, but not all uses, or which includes engineered structures that must be maintained or protected against damage to perform properly and be effective, or which requires groundwater use or soil management restrictions; and

WHEREAS, the Legislature of the State of New York has declared that Environmental Easement shall mean an interest in real property, created under and subject to the provisions of Article 71, Title 36 of the New York State Environmental Conservation Law ("ECL") which contains a use restriction and/or a prohibition on the use of land in a manner inconsistent with engineering controls which are intended to ensure the long term effectiveness of a site remedial program or eliminate potential exposure pathways to hazardous waste or petroleum; and

WHEREAS, Grantor, is the owner of real property located at the address of #0 Southside Avenue in the Village of Hastings-on-Hudson, Town of Greenburgh, County of Westchester and State of New York, known and designated on the tax map of the County Clerk of Westchester as tax map parcel numbers: Section 4.100 Block 93 Lot 18, being the same as that property conveyed to Grantor by deed dated December 9, 1974 and recorded in the Westchester County Clerk's Office in Liber and Page 7238/623. The property subject to this Environmental Easement (the "Controlled Property") comprises approximately 8.088 +/- acres, and is hereinafter more fully described in the Land Title Survey dated October 7, 2015 and last revised December 16, 2015 prepared by James F. Cook, NYSPLS of C.T. Male Associates, which will be attached to the Site Management Plan. The Controlled Property description is set forth in and attached hereto as Schedule A; and

WHEREAS, the Department accepts this Environmental Easement in order to ensure the protection of public health and the environment and to achieve the requirements for remediation

established for the Controlled Property until such time as this Environmental Easement is extinguished pursuant to ECL Article 71, Title 36; and

NOW THEREFORE, in consideration of the mutual covenants contained herein and the terms and conditions of Order on Consent Index Number: A3-0612-1208, Grantor conveys to Grantee a permanent Environmental Easement pursuant to ECL Article 71, Title 36 in, on, over, under, and upon the Controlled Property as more fully described herein ("Environmental Easement").

1. Purposes. Grantor and Grantee acknowledge that the Purposes of this Environmental Easement are: to convey to Grantee real property rights and interests that will run with the land in perpetuity in order to provide an effective and enforceable means of encouraging the reuse and redevelopment of this Controlled Property at a level that has been determined to be safe for a specific use while ensuring the performance of operation, maintenance, and/or monitoring requirements; and to ensure the restriction of future uses of the land that are inconsistent with the above-stated purpose.

2. Institutional and Engineering Controls. The controls and requirements listed in the Department approved Site Management Plan ("SMP") including any and all Department approved amendments to the SMP are incorporated into and made part of this Environmental Easement. These controls and requirements apply to the use of the Controlled Property, run with the land, are binding on the Grantor and the Grantor's successors and assigns, and are enforceable in law or equity against any owner of the Controlled Property, any lessees and any person using the Controlled Property.

A. (1) The Controlled Property may be used for:

Restricted Residential as described in 6 NYCRR Part 375-1.8(g)(2)(ii), Commercial as described in 6 NYCRR Part 375-1.8(g)(2)(iii) and Industrial as described in 6 NYCRR Part 375-1.8(g)(2)(iv)

(2) All Engineering Controls must be operated and maintained as specified in the Site Management Plan (SMP);

(3) All Engineering Controls must be inspected at a frequency and in a manner defined in the SMP;

(4) The use of groundwater underlying the property is prohibited without necessary water quality treatment as determined by the NYSDOH or the Westchester County Department of Health to render it safe for use as drinking water or for industrial purposes, and the user must first notify and obtain written approval to do so from the Department;

(5) Groundwater and other environmental or public health monitoring must be performed as defined in the SMP;

(6) Data and information pertinent to Site Management of the Controlled Property must be reported at the frequency and in a manner defined in the SMP;

(7) All future activities on the property that will disturb remaining contaminated material must be conducted in accordance with the SMP;

(8) Monitoring to assess the performance and effectiveness of the remedy must be performed as defined in the SMP;

(9) Operation, maintenance, monitoring, inspection, and reporting of any mechanical or physical components of the remedy shall be performed as defined in the SMP;

(10) Access to the site must be provided to agents, employees or other representatives of the State of New York with reasonable prior notice to the property owner to assure compliance with the restrictions identified by this Environmental Easement.

B. The Controlled Property shall not be used for Residential purposes as defined in 6NYCRR 375-1.8(g)(2)(i), and the above-stated engineering controls may not be discontinued without an amendment or extinguishment of this Environmental Easement.

C. The SMP describes obligations that the Grantor assumes on behalf of Grantor, its successors and assigns. The Grantor's assumption of the obligations contained in the SMP which may include sampling, monitoring, and/or operating a treatment system, and providing certified reports to the NYSDEC, is and remains a fundamental element of the Department's determination that the Controlled Property is safe for a specific use, but not all uses. The SMP may be modified in accordance with the Department's statutory and regulatory authority. The Grantor and all successors and assigns, assume the burden of complying with the SMP and obtaining an up-to-date version of the SMP from:

Site Control Section
Division of Environmental Remediation
NYSDEC
625 Broadway
Albany, New York 12233
Phone: (518) 402-9553

D. Grantor must provide all persons who acquire any interest in the Controlled Property a true and complete copy of the SMP that the Department approves for the Controlled Property and all Department-approved amendments to that SMP.

E. Grantor covenants and agrees that until such time as the Environmental Easement is extinguished in accordance with the requirements of ECL Article 71, Title 36 of the ECL, the property deed and all subsequent instruments of conveyance relating to the Controlled Property shall state in at least fifteen-point bold-faced type:

This property is subject to an Environmental Easement held by the New York State Department of Environmental Conservation pursuant to Title 36 of Article 71 of the Environmental Conservation

Law.

F. Grantor covenants and agrees that this Environmental Easement shall be incorporated in full or by reference in any leases, licenses, or other instruments granting a right to use the Controlled Property.

G. Grantor covenants and agrees that it shall, at such time as NYSDEC may require, submit to NYSDEC a written statement by an expert the NYSDEC may find acceptable certifying under penalty of perjury, in such form and manner as the Department may require, that:

(1) the inspection of the site to confirm the effectiveness of the institutional and engineering controls required by the remedial program was performed under the direction of the individual set forth at 6 NYCRR Part 375-1.8(h)(3).

(2) the institutional controls and/or engineering controls employed at such site:

(i) are in-place;

(ii) are unchanged from the previous certification, or that any identified changes to the controls employed were approved by the NYSDEC and that all controls are in the Department-approved format; and

(iii) that nothing has occurred that would impair the ability of such control to protect the public health and environment;

(3) the owner will continue to allow access to such real property to evaluate the continued maintenance of such controls;

(4) nothing has occurred that would constitute a violation or failure to comply with any site management plan for such controls;

(5) the report and all attachments were prepared under the direction of, and reviewed by, the party making the certification;

(6) to the best of his/her knowledge and belief, the work and conclusions described in this certification are in accordance with the requirements of the site remedial program, and generally accepted engineering practices; and

(7) the information presented is accurate and complete.

3. Right to Enter and Inspect. Grantee, its agents, employees, or other representatives of the State may enter and inspect the Controlled Property in a reasonable manner and at reasonable times to assure compliance with the above-stated restrictions.

4. Reserved Grantor's Rights. Grantor reserves for itself, its assigns, representatives, and successors in interest with respect to the Property, all rights as fee owner of the Property, including:

A. Use of the Controlled Property for all purposes not inconsistent with, or limited by the terms of this Environmental Easement;

B. The right to give, sell, assign, or otherwise transfer part or all of the underlying fee interest to the Controlled Property, subject and subordinate to this Environmental Easement;

5. Enforcement

A. This Environmental Easement is enforceable in law or equity in perpetuity by Grantor, Grantee, or any affected local government, as defined in ECL Section 71-3603, against

the owner of the Property, any lessees, and any person using the land. Enforcement shall not be defeated because of any subsequent adverse possession, laches, estoppel, or waiver. It is not a defense in any action to enforce this Environmental Easement that: it is not appurtenant to an interest in real property; it is not of a character that has been recognized traditionally at common law; it imposes a negative burden; it imposes affirmative obligations upon the owner of any interest in the burdened property; the benefit does not touch or concern real property; there is no privity of estate or of contract; or it imposes an unreasonable restraint on alienation.

B. If any person violates this Environmental Easement, the Grantee may revoke the Certificate of Completion with respect to the Controlled Property.

C. Grantee shall notify Grantor of a breach or suspected breach of any of the terms of this Environmental Easement. Such notice shall set forth how Grantor can cure such breach or suspected breach and give Grantor a reasonable amount of time from the date of receipt of notice in which to cure. At the expiration of such period of time to cure, or any extensions granted by Grantee, the Grantee shall notify Grantor of any failure to adequately cure the breach or suspected breach, and Grantee may take any other appropriate action reasonably necessary to remedy any breach of this Environmental Easement, including the commencement of any proceedings in accordance with applicable law.

D. The failure of Grantee to enforce any of the terms contained herein shall not be deemed a waiver of any such term nor bar any enforcement rights.

6. Notice. Whenever notice to the Grantee (other than the annual certification) or approval from the Grantee is required, the Party providing such notice or seeking such approval shall identify the Controlled Property by referencing the following information:

County, NYSDEC Site Number, NYSDEC Brownfield Cleanup Agreement, State Assistance Contract or Order Number, and the County tax map number or the Liber and Page or computerized system identification number.

Parties shall address correspondence to:

Site Number: 360015A
Office of General Counsel
NYSDEC
625 Broadway
Albany New York 12233-5500

With a copy to:

Site Control Section
Division of Environmental Remediation
NYSDEC
625 Broadway
Albany, NY 12233

All notices and correspondence shall be delivered by hand, by registered mail or by Certified mail and return receipt requested. The Parties may provide for other means of receiving and communicating notices and responses to requests for approval.

7. Recordation. Grantor shall record this instrument, within thirty (30) days of execution of

this instrument by the Commissioner or her/his authorized representative in the office of the recording officer for the county or counties where the Property is situated in the manner prescribed by Article 9 of the Real Property Law.

8. Amendment. Any amendment to this Environmental Easement may only be executed by the Commissioner of the New York State Department of Environmental Conservation or the Commissioner's Designee, and filed with the office of the recording officer for the county or counties where the Property is situated in the manner prescribed by Article 9 of the Real Property Law.

9. Extinguishment. This Environmental Easement may be extinguished only by a release by the Commissioner of the New York State Department of Environmental Conservation, or the Commissioner's Designee, and filed with the office of the recording officer for the county or counties where the Property is situated in the manner prescribed by Article 9 of the Real Property Law.

10. Joint Obligation. If there are two or more parties identified as Grantor herein, the obligations imposed by this instrument upon them shall be joint and several.

IN WITNESS WHEREOF, Grantor has caused this instrument to be signed in its name.

ExxonMobil Oil Corporation:

By: _____

Print Name: Robert A. Parker

Title: GCM Date: 11.13.15

Grantor's Acknowledgment

STATE OF ~~NEW YORK~~ Texas)
) ss:
COUNTY OF Harris)

On the 13 day of November, in the year 20 15, before me, the undersigned, personally appeared R.A. Parker Agent/Attorney in fact, personally known to me or proved to me on the basis of satisfactory evidence to be the individual(s) whose name is (are) subscribed to the within instrument and acknowledged to me that he/she/they executed the same in his/her/their capacity(ies), and that by his/her/their signature(s) on the instrument, the individual(s), or the person upon behalf of which the individual(s) acted, executed the instrument.

Donetta E. Williams
Notary Public - State of ~~New York~~ Texas

DONETTA E. WILLIAMS
Notary Public, State of Texas
My Commission Expires
March 31, 2018

THIS ENVIRONMENTAL EASEMENT IS HEREBY ACCEPTED BY THE PEOPLE OF THE STATE OF NEW YORK, Acting By and Through the Department of Environmental Conservation as Designee of the Commissioner,

By: _____
Robert W. Schick, Director
Division of Environmental Remediation

Grantee's Acknowledgment

STATE OF NEW YORK)
) ss:
COUNTY OF ALBANY)

On the 3rd day of February, in the year 2016, before me, the undersigned, personally appeared Robert W. Schick, personally known to me or proved to me on the basis of satisfactory evidence to be the individual(s) whose name is (are) subscribed to the within instrument and acknowledged to me that he/she/ executed the same in his/her/ capacity as Designee of the Commissioner of the State of New York Department of Environmental Conservation, and that by his/her/ signature on the instrument, the individual, or the person upon behalf of which the individual acted, executed the instrument.

_____
Notary Public - State of New York

David J. Chiusano
Notary Public, State of New York
No. 01CH5032146
Qualified in Schenectady County
Commission Expires August 22, 2018

SCHEDULE "A" PROPERTY DESCRIPTION

ALL THAT CERTAIN LOT, PIECE OR PARCEL OF LAND, SITUATE, LYING AND BEING IN THE VILLAGE OF HASTINGS-ON-HUDSON, TOWN OF GREENBURGH, COUNTY OF WESTCHESTER AND STATE OF NEW YORK, BEING BOUNDED AND DESCRIBED AS FOLLOWS:

BEGINNING AT A POINT ON THE DIVISION LINE BETWEEN LAND NOW OR FORMERLY BELONGING TO ANACONDA WIRE AND CABLE CO., FORMERLY NATIONAL CONDUIT AND CABLE CO. AND CHAS. T. CROMWELL, ON THE NORTH AND TAPPAN TANKER TERMINAL INC., ON THE SOUTH WHICH SAID POINT IS DISTANT, AS MEASURED ALONG SAID DIVISION LINE, NORTH 87° 24' 00" WEST 126.00 FEET, FROM A POINT ON THE WESTERLY RIGHT OF WAY LINE OF THE PENN CENTRAL RAILROAD, FORMERLY NEW YORK CENTRAL RAILROAD, WHICH SAID LAST MENTIONED POINT IS DISTANT SOUTH 65° 05' 30" WEST 36.48 FEET FROM THE STONE MONUMENT MARKING THE POINT OF CURVE OF CURVE NO. 34 OF THE ORIGINAL CENTER LINE OF SAID RAILROAD;

RUNNING THENCE FROM SAID POINT OF BEGINNING THROUGH LANDS OF THE TAPPAN TANKER TERMINAL INC. THE FOLLOWING COURSES AND DISTANCES:

SOUTH 2° 15' 46" WEST 379.40 FEET,
NORTH 87° 44' 14" WEST 123.01 FEET AND
SOUTH 2° 57' 36" WEST 646.16 FEET TO THE NORTHERLY SIDE OF A TWO STORY BRICK AND FRAME BUILDING;

THENCE ALONG THE NORTHERLY, WESTERLY AND SOUTHERLY FACE OF SAID TWO STORY BRICK AND FRAME BUILDING:

NORTH 87° 31' 13" WEST 16.41 FEET,
SOUTH 2° 28' 47" WEST 121.70 FEET AND
SOUTH 87° 31' 13" EAST 15.39 FEET;

THENCE SOUTH 2° 57' 36" WEST 53.01 FEET TO A POINT OF CURVE;

THENCE ON A CURVE TO THE LEFT HAVING A RADIUS OF 82.97 FEET, A DISTANCE OF 116.71 FEET AND SOUTH 12° 31' 45" WEST 20.00 FEET TO A POINT IN THE SOUTHERLY BOUNDARY LINE OF LAND BELONGING TO TAPPAN TANKER TERMINAL INC., DISTANT AS MEASURED ALONG THE SAME NORTH 77° 28' 15" WEST 147.24 FEET FROM THE WESTERLY RIGHT OF WAY LINE OF SAID RAILROAD;

THENCE INTO THE WATERS OF THE HUDSON RIVER, NORTH 77° 28' 15" WEST 318.00 FEET AND NORTH 3° 24' 00" EAST 1248.43 FEET TO THE DIVISION LINE FIRST HEREINABOVE REFERRED TO;

THENCE ALONG THE SAID DIVISION LINE, SOUTH 87° 24' 00" EAST 356.33 FEET TO THE POINT AND PLACE OF BEGINNING.

SAID PROPERTY CONTAINING APPROXIMATELY 8.088 ACRES MORE OR LESS.

APPENDIX C

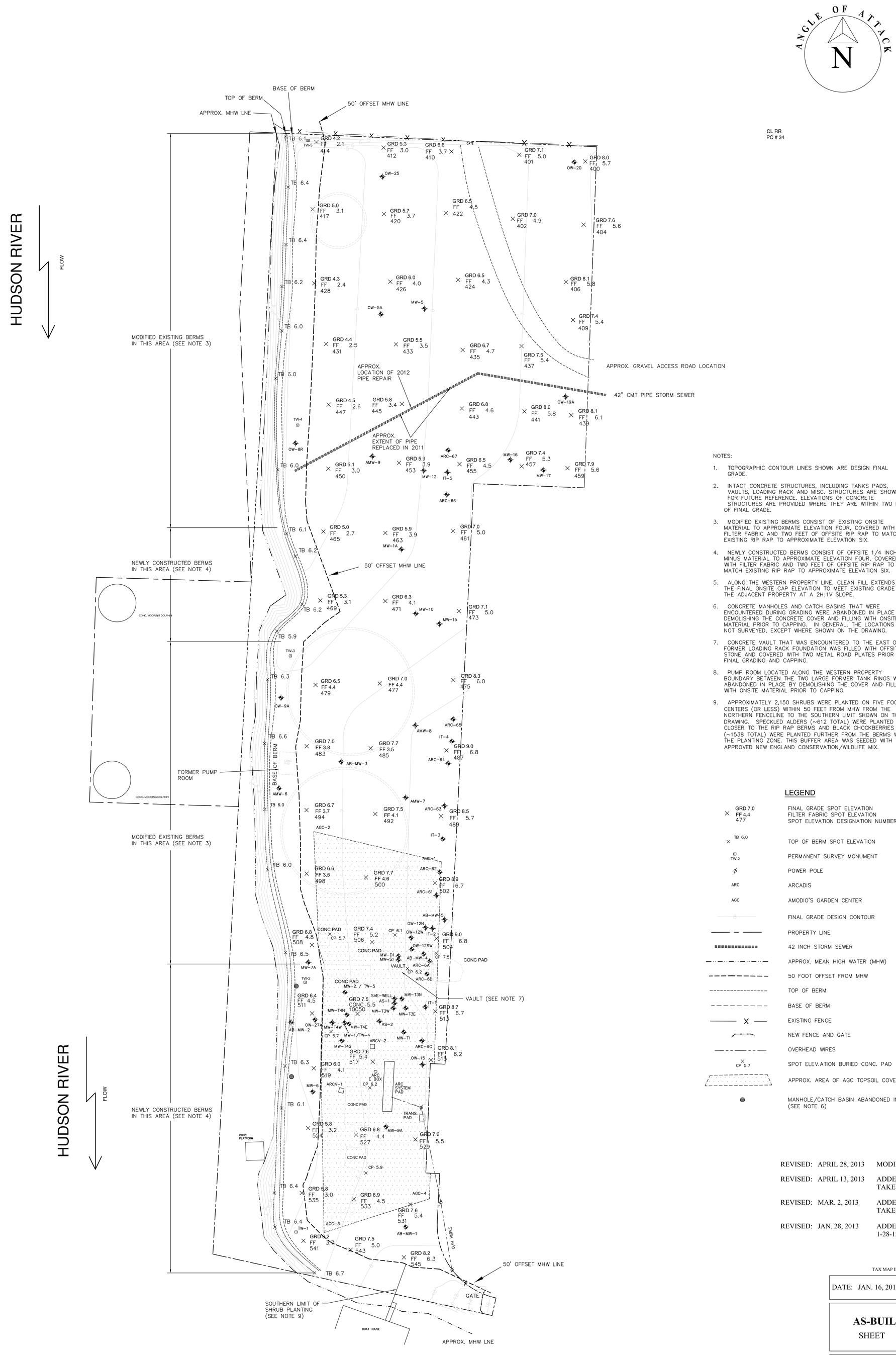

NOTES:

1. TOPOGRAPHIC CONTOUR LINES SHOWN ARE DESIGN FINAL GRADE.
2. INTACT CONCRETE STRUCTURES, INCLUDING TANKS PADS, VAULTS, LOADING RACK AND MISC. STRUCTURES ARE SHOWN FOR FUTURE REFERENCE. ELEVATIONS OF CONCRETE STRUCTURES ARE PROVIDED WHERE THEY ARE WITHIN TWO FEET OF FINAL GRADE.
3. MODIFIED EXISTING BERMS CONSIST OF EXISTING ONSITE MATERIAL TO APPROXIMATE ELEVATION FOUR, COVERED WITH FILTER FABRIC AND TWO FEET OF OFFSITE RIP RAP TO MATCH EXISTING RIP RAP TO APPROXIMATE ELEVATION SIX.
4. NEWLY CONSTRUCTED BERMS CONSIST OF OFFSITE 1/4 INCH MINUS MATERIAL TO APPROXIMATE ELEVATION FOUR, COVERED WITH FILTER FABRIC AND TWO FEET OF OFFSITE RIP RAP TO MATCH EXISTING RIP RAP TO APPROXIMATE ELEVATION SIX.
5. ALONG THE WESTERN PROPERTY LINE, CLEAN FILL EXTENDS FROM THE FINAL ONSITE CAP ELEVATION TO MEET EXISTING GRADE ON THE ADJACENT PROPERTY AT A 2H:1V SLOPE.
6. CONCRETE MANHOLES AND CATCH BASINS THAT WERE ENCOUNTERED DURING GRADING WERE ABANDONED IN PLACE BY DEMOLISHING THE CONCRETE COVER AND FILLING WITH ONSITE MATERIAL PRIOR TO CAPPING. IN GENERAL, THE LOCATIONS WERE NOT SURVEYED, EXCEPT WHERE SHOWN ON THE DRAWING.
7. CONCRETE VAULT THAT WAS ENCOUNTERED TO THE EAST OF THE FORMER LOADING RACK FOUNDATION WAS FILLED WITH OFFSITE STONE AND COVERED WITH TWO METAL ROAD PLATES PRIOR TO FINAL GRADING AND CAPPING.
8. PUMP ROOM LOCATED ALONG THE WESTERN PROPERTY BOUNDARY BETWEEN THE TWO LARGE FORMER TANK RINGS WAS ABANDONED IN PLACE BY DEMOLISHING THE COVER AND FILLING WITH ONSITE MATERIAL PRIOR TO CAPPING.
9. APPROXIMATELY 2,150 SHRUBS WERE PLANTED ON FIVE FOOT CENTERS (OR LESS) WITHIN 50 FEET FROM MHW FROM THE NORTHERN FENCELINE TO THE SOUTHERN LIMIT SHOWN ON THE DRAWING. SPECKLED ALDERS (~612 TOTAL) WERE PLANTED CLOSER TO THE RIP RAP BERMS AND BLACK CHOCKBERRIES (~1538 TOTAL) WERE PLANTED FURTHER FROM THE BERMS WITHIN THE PLANTING ZONE. THIS BUFFER AREA WAS SEEDED WITH THE APPROVED NEW ENGLAND CONSERVATION/WILDLIFE MIX.

LEGEND

GRD 7.0 FF 4.4 477	FINAL GRADE SPOT ELEVATION FILTER FABRIC SPOT ELEVATION SPOT ELEVATION DESIGNATION NUMBER
TB 6.0	TOP OF BERM SPOT ELEVATION
TW-2	PERMANENT SURVEY MONUMENT
ϕ	POWER POLE
ARC	ARCADIS
AGC	AMODIO'S GARDEN CENTER
	FINAL GRADE DESIGN CONTOUR
	PROPERTY LINE
	42 INCH STORM SEWER
	APPROX. MEAN HIGH WATER (MHW)
	50 FOOT OFFSET FROM MHW
	TOP OF BERM
	BASE OF BERM
X	EXISTING FENCE
	NEW FENCE AND GATE
	OVERHEAD WIRES
CP 5.7	SPOT ELEV.ATION BURIED CONC. PAD
	APPROX. AREA OF AGC TOPSOIL COVERAGE
	MANHOLE/CATCH BASIN ABANDONED IN PLACE (SEE NOTE 6)

REVISED:	APRIL 28, 2013	MODIFIED FOR COMMENTS
REVISED:	APRIL 13, 2013	ADDED FINAL GRADE SHOTS TAKEN 3-22-13
REVISED:	MAR. 2, 2013	ADDED FINAL GRADE SHOTS TAKEN 2-21-13
REVISED:	JAN. 28, 2013	ADDED TOPO SHOTS TAKEN 1-28-13

TAX MAP ID # 4.100-93-18

DATE: JAN. 16, 2013 SCALE 1" = 40'

AS-BUILT SURVEY

SHEET 1 OF 1

MAP OF PROPERTY
#1 RAILROAD AVENUE
SITUATE AT
VILLAGE OF HASTINGS ON HUDSON
TOWN OF GREENBURGH
WESTCHESTER COUNTY, NEW YORK

ANGLE OF ATTACK
LAND SURVEYING, LLC
100 S. JERSEY AVE. UNIT 7
SETAUKET, NY 11733
631-751-1901

HORIZONTAL DATUM NAD 83 NEW YORK STATE PLANE NY EAST ZONE US FEET
VERTICAL DATUM NAVD 88 US FEET

NOTE: UNAUTHORIZED ALTERATION OR ADDITION TO A SURVEY BEARING A LICENSED LAND SURVEYOR'S SEAL IS A VIOLATION OF THE NEW YORK STATE EDUCATION LAW, SECTION 7209, SUB-SECTION 2

NOTE: THIS SURVEY IS FOR THE PURPOSE OF SHOWING IMPROVEMENTS AS OF THE DATE OF THIS SURVEY AND IS NOT TO BE RELIED UPON FOR THE FUTURE ESTABLISHMENT OF FENCE, BUILDING OR OTHER IMPROVEMENT LINES. SUBSURFACE CONDITIONS MAY NOT BE SHOWN. EASEMENTS, RIGHTS OF WAY AND OTHER LINES OF RECORD MAY NOT BE SHOWN.

40 0 40 80 120 160 200
SCALE: 1" = 40'
CONTOUR INTERVAL 1'

WILLIAM D. MITCHELL
NYS PLS # 49834

APPENDIX D

APPENDIX D – EXCAVATION WORK PLAN

D-1 NOTIFICATION

At least 15 days prior to the start of any activity that is anticipated to encounter remaining contamination, the Site owner or their representative will notify the Department. Currently, this notification will be made to:

Ed Moore or current Regional Hazardous Waste Remediation Engineer
NYSDEC Region 3
21 South Putt Corners Road
New Paltz, NY 12561-1696

and

Ms. Sarah Saucier or current Project Manager
Division of Environmental Remediation
New York State Department of Environmental Conservation
625 Broadway
Albany, New York 12233 -7014

This notification will include:

- A detailed description of the work to be performed, including the location and areal extent, plans for Site re-grading, intrusive elements or utilities to be installed below the soil cover, estimated volumes of contaminated soil to be excavated and any work that may impact an engineering control,

- A summary of environmental conditions anticipated in the work areas, including the nature and concentration levels of contaminants of concern, potential presence of grossly contaminated media, and plans for any pre-construction sampling;

- A schedule for the work, detailing the start and completion of all intrusive work,

- A summary of the applicable components of this EWP,

- A statement that the work will be performed in compliance with this EWP and 29 CFR 1910.120,
- A copy of the contractor's health and safety plan, in electronic format,
- Identification of disposal facilities for potential waste streams, and
- Identification of sources of any anticipated backfill, along with all required chemical testing results.

D-2 SOIL SCREENING METHODS

Visual, olfactory and instrument-based soil screening will be performed by a qualified environmental professional during all remedial and development excavations into known or potentially contaminated material (remaining contamination). Soil screening will be performed regardless of when the invasive work is done and will include all excavation and invasive work performed during development, such as excavations for foundations and utility work, after issuance of the COC.

Soils will be segregated based on previous environmental data and screening results into material that requires off-site disposal, material that requires testing, material that can be returned to the subsurface, and material that can be used as cover soil.

D-3 STOCKPILE METHODS

Soil stockpiles will be continuously encircled with a berm and/or silt fence. Hay bales will be used as needed near catch basins, surface waters and other discharge points.

Stockpiles will be kept covered at all times with appropriately anchored tarps. Stockpiles will be routinely inspected and damaged tarp covers will be promptly replaced.

Stockpiles will be inspected at a minimum once each week and after every storm event. Results of inspections will be recorded in a logbook and maintained at the Site and available for inspection by NYSDEC.

D-4 MATERIALS EXCAVATION AND LOAD OUT

A qualified environmental professional or person under their supervision will oversee all invasive work and the excavation and load-out of all excavated material.

The owner of the property and its contractors are solely responsible for safe execution of all invasive and other work performed under this Plan.

The presence of utilities and easements on the Site will be investigated by the qualified environmental professional. It will be determined whether a risk or impediment to the planned work under this SMP is posed by utilities or easements on the Site.

Loaded vehicles leaving the Site will be appropriately lined, tarped, securely covered, manifested, and placarded in accordance with appropriate Federal, State, local, and NYSDOT requirements (and all other applicable transportation requirements).

A truck wash will be operated on-site. The qualified environmental professional will be responsible for ensuring that all outbound trucks will be washed at the truck wash before leaving the Site until the activities performed under this section are complete.

Locations where vehicles enter or exit the Site shall be inspected daily for evidence of off-site soil tracking.

The qualified environmental professional will be responsible for ensuring that all egress points for truck and equipment transport from the Site are clean of dirt and other materials derived from the Site during intrusive excavation activities. Cleaning of the adjacent streets will be performed as needed to maintain a clean condition with respect to site-derived materials.

D-5 MATERIALS TRANSPORT OFF-SITE

All transport of materials will be performed by licensed haulers in accordance with appropriate local, State, and Federal regulations, including 6 NYCRR Part 364. Haulers will be appropriately licensed and trucks properly placarded.

Material transported by trucks exiting the Site will be secured with tight-fitting covers. Loose-fitting canvas-type truck covers will be prohibited. If loads contain wet material capable of producing free liquid, truck liners will be used.

All trucks will be washed prior to leaving the Site. Truck wash waters will be collected and disposed of off-site in an appropriate manner.

Truck transport routes and times will be in accordance with requirements of the Village of Hastings on Hudson. All trucks loaded with Site materials will exit the vicinity of the Site using only these approved truck routes.

Trucks will be prohibited from stopping and idling in the neighborhood outside the project Site.

Egress points for truck and equipment transport from the Site will be kept clean of dirt and other materials during Site remediation and development.

Queuing of trucks will be performed on-site in order to minimize off-site disturbance. Off-site queuing will be prohibited.

D-6 MATERIALS DISPOSAL OFF-SITE

All soil/fill/solid waste excavated and removed from the Site will be treated as contaminated and regulated material and will be transported and disposed at an approved disposal facility and in accordance with all local, State (including 6NYCRR Part 360) and Federal regulations. If disposal of soil/fill from this Site is proposed for unregulated off-site disposal (i.e. clean soil removed for development purposes), a formal request with an associated plan will be made to the NYSDEC. Unregulated off-site management of materials from this Site will not occur without formal NYSDEC approval.

Off-site disposal locations for excavated soils will be identified in the pre-excavation notification. This will include estimated quantities and a breakdown by class of disposal facility if appropriate, i.e. hazardous waste disposal facility, solid waste landfill, petroleum treatment facility, C/D recycling facility, etc. Actual disposal quantities and

associated documentation will be reported to the NYSDEC in the Periodic Review Report. This documentation will include: waste profiles, test results, facility acceptance letters, manifests, bills of lading and facility receipts.

Non-hazardous historic fill and contaminated soils taken off-site will be handled, at minimum, as a Municipal Solid Waste per 6NYCRR Part 360-1.2. Material that does not meet Track 1 unrestricted SCOs is prohibited from being taken to a New York State recycling facility (6NYCRR Part 360-16 Registration Facility).

D-7 MATERIALS REUSE ON-SITE

Chemical criteria for on-site reuse of material must be approved by NYSDEC and are listed in Table 3. The qualified environmental professional will ensure that procedures defined for materials reuse in this SMP are followed and that unacceptable material does not remain on-site. Contaminated on-site material, including historic fill and contaminated soil, that is acceptable for re-use on-site will be placed below the demarcation layer or impervious surface, and will not be reused within a cover soil layer, within landscaping berms, or as backfill for subsurface utility lines.

Reuse of any on-site material must receive prior NYSDEC approval. Any demolition material proposed for reuse on-site will be sampled for asbestos and the results will be reported to the NYSDEC for acceptance. If asbestos is identified, the Department of Labor, Asbestos Control Bureau must also be notified. Concrete crushing or processing on-site will not be performed without prior NYSDEC approval. Organic matter (wood, roots, stumps, etc.) or other solid waste derived from clearing and grubbing of the Site will not be reused on-site without NYSDEC prior approval.

D-8 FLUIDS MANAGEMENT

All liquids to be removed from the Site, including excavation dewatering and groundwater monitoring well purge and development waters, will be handled, transported and disposed at an approved facility and in accordance with applicable local, State, and Federal regulations. Dewatering, purge and development fluids will not be recharged back to the land surface or subsurface of the Site, but will be managed off-site.

Discharge of water generated during large-scale construction activities to surface waters (i.e. a local pond, stream or river) will be performed under a SPDES permit.

D-9 COVER SYSTEM RESTORATION

After the completion of soil removal and any other invasive activities the cover system will be restored in a manner that complies with the ROD. The demarcation layer, consisting of filter fabric (Geotex 401 nonwoven polypropylene geotextile), orange snow fencing material, or equivalent material will be replaced to provide a visual reference to the top of the 'Remaining Contamination Zone', the zone that requires adherence to special conditions for disturbance of remaining contaminated soils defined in this Site Management Plan. If the type of cover system changes from that which exists prior to the excavation (i.e., a soil cover is replaced by asphalt), this will constitute a modification of the cover element of the remedy and the upper surface of the 'Remaining Contamination'. A figure showing the modified surface will be included in the subsequent Periodic Review Report and in any updates to the Site Management Plan.

D-10 BACKFILL FROM OFF-SITE SOURCES

All materials proposed for import onto the Site will be approved by the qualified environmental professional and will be in compliance with provisions in this SMP prior to receipt at the Site.

Material from industrial sites, spill sites, or other environmental remediation sites or potentially contaminated sites will not be imported to the Site.

All imported soils will meet the backfill and cover soil quality standards established in 6NYCRR 375-6.7(d). Based on an evaluation of the land use, protection of groundwater and protection of ecological resources criteria, the resulting soil quality standards are listed in Table 3. Soils that meet 'exempt' fill requirements under 6 NYCRR Part 360, but do not meet backfill or cover soil objectives for this Site, will not be imported onto the Site without prior approval by NYSDEC. Solid waste will not be imported onto the Site.

Trucks entering the Site with imported soils will be securely covered with tight fitting

covers. Imported soils will be stockpiled separately from excavated materials and covered to prevent dust releases.

D-11 STORMWATER POLLUTION PREVENTION

For larger excavations exceeding 1 acre, procedures for stormwater pollution prevention will be submitted and approved prior to work commencing. The Stormwater Pollution Prevention Plan will conform to the requirements of NYSDEC Division of Water guidelines and NYS regulations.

Barriers and hay bale checks will be installed and inspected once a week and after every storm event. Results of inspections will be recorded in a logbook and maintained at the Site and available for inspection by NYSDEC. All necessary repairs shall be made immediately.

Accumulated sediments will be removed as required to keep the barrier and hay bale check functional.

All undercutting or erosion of the silt fence toe anchor shall be repaired immediately with appropriate backfill materials.

Manufacturer's recommendations will be followed for replacing silt fencing damaged due to weathering.

Erosion and sediment control measures identified in the SMP shall be observed to ensure that they are operating correctly. Where discharge locations or points are accessible, they shall be inspected to ascertain whether erosion control measures are effective in preventing significant impacts to receiving waters

Silt fencing or hay bales will be installed around the entire perimeter of the construction area.

D-12 CONTINGENCY PLAN

If underground tanks or other previously unidentified contaminant sources are found during post-remedial subsurface excavations or development related construction, excavation activities will be suspended until sufficient equipment is mobilized to address the condition.

Sampling will be performed on product, sediment and surrounding soils, etc. as necessary to determine the nature of the material and proper disposal method. Chemical analysis will be performed for full a full list of analytes (TAL metals; TCL volatiles and semi-volatiles, TCL pesticides and PCBs), unless the Site history and previous sampling results provide a sufficient justification to limit the list of analytes. In this case, a reduced list of analytes will be proposed to the NYSDEC for approval prior to sampling.

Identification of unknown or unexpected contaminated media identified by screening during invasive Site work will be promptly communicated by phone to NYSDEC's Project Manager. Reportable quantities of petroleum product will also be reported to the NYSDEC spills hotline. These findings will be also included in the periodic reports prepared pursuant to Section 5 of the SMP.

D-13 COMMUNITY AIR MONITORING PLAN

Community air monitoring will be conducted during soil excavation, test pitting, break-up of concrete, or other activity that can generate airborne contaminant or nuisance releases in accordance with the NYSDOH Generic CAMP (in Appendix E) or as required and approved by the NYSDEC and NYSDOH in a task-specific CAMP for the planned activity. Whether using a generic or site-specific plan, the CAMP requires, at a minimum, real-time monitoring for volatile organic compounds (VOCs) and particulates (i.e., dust) from a work area when Site activities are in progress that could generate airborne contaminants to provide a measure of protection for the downwind community (i.e., off-site receptors including residences and businesses and on-site workers not directly involved with the subject work activities), and to mitigate the spread of contamination off-site by air. Air monitoring for VOCs and particulates should be conducted upwind and downwind at the work area perimeter, and as required in the work area to protect workers directly involved with the subject work activities. The CAMP will identify action levels for all monitored parameters and mitigation measures, up to and including stoppage of work, upon an action level exceedance.

A figure showing the location of air sampling stations based on generally prevailing wind conditions will be provided by the Qualified Professional to the NYSDEC for

approval. These locations will be adjusted on a daily or more frequent basis based on actual wind directions to provide an upwind and at least two downwind monitoring stations.

Exceedances of action levels listed in the CAMP will be reported to NYSDEC and NYSDOH Project Managers.

D-14 ODOR CONTROL PLAN

This odor control plan is capable of controlling emissions of nuisance odors off-site and on-site, if there are tenants on the property. Specific odor control methods to be used will be developed by the Qualified Professional for the task subject to the approval of the NYSDEC. If nuisance odors are identified at the Site boundary, or if odor complaints are received, work will be halted and the source of odors will be identified and corrected. Work will not resume until all nuisance odors have been abated. NYSDEC and NYSDOH will be notified of all odor events and of any other complaints about the project. Implementation of all odor controls, including the halt of work, is the responsibility of the property owner's Remediation Engineer, and any measures that are implemented will be discussed in the Periodic Review Report.

All necessary means will be employed to prevent on- and off-site nuisances. At a minimum, these measures will include: (a) limiting the area of open excavations and size of soil stockpiles; (b) shrouding open excavations with tarps and other covers; and (c) using foams to cover exposed odorous soils; if odors develop and cannot be otherwise controlled, additional means to eliminate odor nuisances will include: (d) direct load-out of soils to trucks for off-site disposal; (e) use of chemical odorants in spray or misting systems; and, (f) use of staff to monitor odors in surrounding neighborhoods, and other measures as necessary.

If nuisance odors develop during intrusive work that cannot be corrected, or where the control of nuisance odors cannot otherwise be achieved due to on-site conditions or close proximity to sensitive receptors, odor control will be achieved by sheltering the excavation and handling areas in a temporary containment structure equipped with appropriate air venting/filtering systems.

D-15 DUST CONTROL PLAN

A dust suppression plan that addresses dust management during invasive on-site work will include, at a minimum, the items listed below:

- Dust suppression will be achieved though the use of a dedicated on-site water truck for road wetting. The truck will be equipped with a water cannon capable of spraying water directly onto off-road areas including excavations and stockpiles.

- Clearing and grubbing of larger sites will be done in stages to limit the area of exposed, unvegetated soils vulnerable to dust production.

- Gravel will be used on roadways to provide a clean and dust-free road surface.

- On-site roads will be limited in total area to minimize the area required for water truck sprinkling.

D-16 OTHER NUISANCES

A plan for rodent control will be developed and utilized by the contractor prior to and during Site clearing and Site grubbing, and during all remedial work.

A plan will be developed and utilized by the contractor for all remedial work to ensure compliance with local noise control ordinances.

APPENDIX E

HEALTH & SAFETY PLAN
Site Management Plan

Site Name:	Former Tappan Terminal, AOC1	**Date of Preparation:**	April 2015
Site Location:	Village of Hastings-on-Hudson, Westchester County, New York	**NYDEC Site No:**	3-60-015

1.0 SITE AND PROJECT DESCRIPTION:

The former Mobil Tappan Terminal property (the Site) is 8.13 acres and part of the larger Tappan Terminal Site, located on 15 acres along the Hudson River waterfront in the Village of Hastings-on-Hudson, Westchester County, New York. This Health & Safety Plan (HASP) has been prepared to support the Site Management Plan (SMP) for the Site (the Western parcel of the Tappan Terminal Site, also known as AOC 1). A Site history and description is available for review in Section 1 of the SMP.

The purpose of this HASP is to define the general requirements that must be followed by all personnel at the Site while performing inspection and non-invasive maintenance activities for the SMP. All employers on this Site will exercise reasonable care to verify that all personnel are following appropriate health and safety procedures. Each employer working at the Site is responsible for the safety of its employees and authorized visitors for their projects. ***Employers must develop a task-specific HASP for their scope of work and submit it to the Site owner for any intrusive work or activities which may create an exposure to areas impacted by Site contaminants.***

Job Safety Analyses (JSAs) for the primary work tasks anticipated and identified for this Site are included in Attachment A of this HASP. The sections below identify the hazards and safe practices to be applied; these are also incorporated into the JSAs for reference. The primary work task anticipated at the Site includes *Site Grounds Inspection or General Visit*.

1.1 Overview of Engineering and Institutional Controls:

To mitigate hazards associated with work to be completed at the Site; various engineering and institutional controls have been implemented for the Site to protect human health and the environment. These controls are described in Section 2 of the SMP. A brief outline of these controls is summarized below:

Engineering Controls:

Exposure to remaining contamination in soil/fill at the Site is mitigated by a soil cover system placed over the Site. This cover system is comprised of a demarcation layer below a nominal 2 feet of soil, or of stone choked with soil, meeting restricted-residential and ecological Soil Cleanup Objectives as applicable.

Institutional Controls:

A series of Institutional Controls is required by the Site Record of Decision including to: (1) implement, maintain and monitor Engineering Control systems; (2) prevent future exposure to remaining contamination by controlling disturbances of the subsurface contamination; and, (3) limit the use and development of the Site to restricted-residential uses only (which includes commercial, light industrial, or recreational). Specific control requirements are listed in Section 2.3 of the SMP.

1.2 HAZWOPER Applicability

Although remedial actions have been undertaken at the Site to protect human health and environment through the Engineering and Institutional Controls described above, the Site is subject to 29 CFR 1910.120 Hazardous Waste

Operations and Emergency Response (HAZWOPER) regulations for work activities where exposure to Site contaminants are not controlled. This could include activities such as ground intrusion into contaminated soil and groundwater as allowable by the SMP. The applicability of these requirements are summarized or referenced in sections below as applicable.

2.0 PERSONNEL TRAINING REQUIREMENTS:

Training required of individuals working at the Site is to include, but not be limited to, the following based on anticipated work.

For site visits, walk through inspections, and general maintenance activities at the Site not including excavation or soil removal in areas characterized as impacted by contaminants at the property:

- Site-specific hazard awareness training via a safety pre-briefing and review of this HASP;

For activities that would include ground penetration activities such as excavation or soil removal in areas characterized as impacted by Site contaminants (e.g. subsurface soils below the Site demarcation layer):

- In accordance with 29 CFR 1910.120 HAZWOPER regulations, hazardous waste Site workers shall, at the time of job assignment, have received a minimum of 40 hours of initial health and safety training for hazardous waste site operations unless otherwise noted in the regulation referenced;
- Annual eight-hour refresher training will be required of all hazardous waste Site field personnel to maintain their qualifications for fieldwork;
- First aid and CPR (at least one field member per event); and
- All personnel performing field work where potential exposure to contaminants exists at the Site are required to have passed a complete medical surveillance examination in accordance with 29 CFR 1910.120(f).

3.0 SITE HEALTH & SAFETY HAZARD ANALYSIS:

Below is a general description of the anticipated chemical, physical and biological hazards to be encountered during activities allowable per the SMP.

3.1 Chemical Hazards:

Contaminants of Concern (COCs) at the Site confirmed from historical investigations and remedial actions include chlorobenzene, benzene, metals, semivolatile organic compounds, total petroleum hydrocarbons and other petroleum-related constituents present in the groundwater and soil at the Site.

Exposures to COCs have been controlled by the installation of a nominal 2 foot soil cover system with a demarcation layer so activities such as site visits, general maintenance work and inspections, and other activities which will not include ground penetration activities should be protected from contact or exposure to impacted soils and groundwater.

During intrusive activities such as excavation/earth moving activities, the above-mentioned compounds may pose a potential exposure hazard through ingestion, inhalation, skin absorption, or a combination of these routes. If such activities are intended, administrative controls with designated action levels based upon onsite air monitoring, and the use of Personal Protective Equipment (PPE) shall be implemented by the entity conducting such work. Any activities which include ground penetration or disturbance shall adhere to the requirements of a task-specific HASP and the SMP.

3.2 Physical Hazards:

Slips, Trips, and Falls: There are likely to be slip and trip hazards onsite due to outdoor influences and conditions. These include vegetation, rocks, rough terrain, equipment and supplies, tools and materials used for work, sharps and debris in the environment etc. Everyone should exercise due care in traversing the Site. Footwear must be of adequate traction. Carrying of materials that could contribute loss of balance leading to a trip or fall should be avoided.

Confined Spaces: Confined spaces are not present at the Site.

Excavation and Trenching: All excavation and trench work will be conducted in accordance with the Excavation Work Plan found in Appendix A of the SMP, a task-specific HASP, and OSHA regulations 29 C.F.R. Part 1926, Subpart P – Excavations 1926.650 – 1926.652, including having an OSHA Competent Person for excavations onsite.

Noise Exposure: Hazardous noise levels may occur from heavy equipment on this Site or neighboring sites. Noise sources typically include the engines and/or motors of the equipment, the operating parts of the equipment, compressed air, tool operation, heavy traffic, and other sources. Hearing protection devices (HPDs) including ear plugs and/or muffs will be used as appropriate and at a minimum will be provided to employees when noise levels are at or above 85 decibels on the A-weighting scale (dBA). Any tasks being completed where even short term noise levels exceed 85 dBA, then hearing protection will be utilized.

Heavy Equipment: If heavy equipment is in the area, it can present significant hazards to workers on the ground in the vicinity of equipment operations. Two areas of an OSHA "focused inspection" for construction include "struck by" and "caught in or between" hazards, accidents or injuries. Most accidents involving heavy equipment are due to a lack of awareness of the victim by the operator and/or of the impending motion by the victim. Communication such as eye contact, hand signals, and awareness of personnel locations and movements and equipment motions are critical to avoid accidents and injuries. Personnel will not "take breaks" under or behind heavy equipment. Personnel on the ground will not approach equipment (such as excavators or backhoes) from the operator's "blind side" (the side with the arm and bucket).

Hand and Power Tools: All tools shall be maintained in a safe condition. Tools shall be used only for their intended purpose. Employers are responsible for tools their employees use even if the tool is the property of the employee. Power tools will be appropriately guarded and guards will not be removed. Tools will be operated using appropriate PPE as applicable for the tool.

Hazard Communication: As applicable to the work activities employed, employers will maintain copies of chemical safety data sheets (SDSs) onsite for all hazardous chemicals on Site. Employees will have appropriate hazard communication training and each employer will have a written Hazard Communication Program that will be used for any chemicals that will be brought to and/or stored on the Site.

Heat Stress: Heat stress will be most likely to occur when wearing protective clothing that decreases natural body ventilation. Additional breaks will be scheduled for personnel in hot weather. Employees should be aware of the effects of heat stress, provided with adequate liquids, and instructed to observe each other for signs of heat stress during hot weather.

Signs of ***heat stress*** are summarized as follows:

- Heat Exhaustion- clammy skin, confusion, dizziness, light headed, fatigue, heat rash, fainting, nausea, profuse sweating, slurred speech, weak pulse.
- Heat Stroke- confusion, convulsion, hot dry skin, high temperature (may feel chilled), incoherent speech, staggered gait, cessation of sweating, unconsciousness.

These signs can be distinguished from those associated with chemical hazards as chemical hazards usually do not cause changes in skin temperature and/ or color, or the ability to sweat.

Treatment: A victim of heat stress should be moved to a cool but not cold environment and allowed to rest by lying down. Fluids should be taken slowly but steadily by mouth. If in doubt about the victim's recovery, seek medical attention.

Workers may be required to use the "buddy system" to monitor for signs of chemical exposure, weather-related stress, and other health and safety hazards. Employees will work in pairs and will maintain constant line of sight with each other. If a "buddied" employee has to leave the work area, then his or her buddy must accompany them.

ACGIH ® TLVs ® for Heat Exposure – Wet Bulb Globe Temperature (WBGT) Readings in °C *

	Acclimatized Workers				Unacclimatized Workers			
Work Demands	Light	Mod.	Heavy	Very Heavy	Light	Mod.	Heavy	Very Heavy
100% work	29.5	27.5	26	N/A	27.5	25	22.5	N/A
75% work/25% rest	30.5	28.5	27.5	N/A	29	26.5	24.5	N/A
50% work/50% rest	31.5	29.5	28.5	27.5	30	28	26.5	25
25% work/75% rest	32.5	31	30	29.5	31	29	28	26.5

Consult the ACGIH TLVs and BEIs current edition for additional notes and instructions on implementing WBGTs.
Only applicable for Level D PPE ensemble – ***NOT*** for Chemical Protective Clothing that restricts evaporation of sweat.

Cold Stress: Cold stress will most likely occur during colder temperatures from fall to spring (however, hypothermia has been known to occur in the summer) if personnel or clothing gets wet, and/or with wind chill conditions. Workers should be aware of signs of cold stress in themselves and in other workers as described below.

Types of Cold Stress:

- A "chill" caused by exposure to cold temperatures and often characterized by shivers.
- "Trench foot" caused by prolonged contact with cold, wet water. Trench foot can occur at any temperature.
- Frostbite caused by extreme cold temperatures and affecting predominantly the outermost parts of the extremities (fingers and toes) and areas with exposure and poor circulation (nose and ears).
- Hypothermia caused by prolonged exposure to intense cold conditions (temperature and/or wind chill) and characterized by a lowering of body core temperature. *Hypothermia is a life-threatening condition and medical attention must be sought immediately*.

Should signs of cold stress be detected, appropriate first aid measures will be taken to protect workers as summarized below.

Treatment: A victim of cold stress should be moved out of the cold. Perspiration soaked or wet clothing should be removed and apply warm blankets and/or clothing direct to the skin. Give the victim cool water to drink. If in doubt about the victim's recovery, seek medical attention.

3.3 Biological Hazards:

Nesting Birds: Several species of birds feed and roost on-site, and may display aggressive behavior if they perceive a threat, including attacking personnel. Birds and all wildlife should be given adequate space to alleviate the perception that an employee is a threat. If the animal is tracking the employee's movements or making excessive gestures, such as bird calls or flapping wings, avoid the area occupied by the animal. This is particularly true during the Spring when birds are nesting.

Mosquitoes: Mosquitoes, carriers of the West Nile Virus, Yellow Fever and other diseases, are indigenous to the area. N,N-Diethyl-meta-toluamide (DEET) is an effective insect repellent and is recommended. Although concentrated DEET formulations protect longer than those that are more dilute, little improvement is offered by concentrations of the active ingredient higher than 50 percent. Adverse effects, though documented, are infrequent and are generally associated with gross overuse of the product. Users should avoid the temptation to apply the most concentrated product available. The transient protection offered by more dilute preparations can be extended by reapplication. When using DEET care should be taken to reapply the repellant when its effectiveness wears off.

Wasps and Bees: Wasps (hornets and yellow-jackets) and bees (honeybees and bumblebees) are common insects that may pose a potential hazard to the field team if work is performed during spring, summer or fall. Bees normally build their nests in the soil; however, they use other natural holes such as abandoned rodent nests or tree hollows. Wasps make a football-shaped, paper-like nest either below or above the ground; yellow-jackets tend to build their nests in the ground and hornets tend to build their nests in trees and shrubbery. Bees can only sting once while wasps sting multiple times because their stinger is barbless. Bees are generally more mild-mannered than wasps and are less likely to sting; wasps sting when they feel threatened. By remaining calm and not annoying bees or wasps by swatting, you lessen the chance of being stung. Wasps and bees inject a venomous fluid under the skin when they sting. The venom causes a painful swelling that may last for several days. If the stinger is still present, carefully remove it with tweezers or by scraping a credit card or other blunt object against the sting site in the opposite direction in which the stinger is embedded.

Ticks: Ticks transmit bacteria that cause illnesses such as Lyme disease or Rocky Mountain spotted fever. Ticks wait for a host from the tips of grasses and shrubs (not from trees). When brushed by a moving host, they quickly let go of the vegetation and climb onto the host. Ticks can only crawl; they cannot fly or jump. Tick season typically lasts from April through October with the peak season from May through August; however, ticks can be active on winter days when the ground temperatures are at or above 45° Fahrenheit.

The best way to protect against tick borne illness is to avoid tick bites. This includes avoiding known tick- infested areas. However, if you visit wooded areas or areas with tall grass and weeds, follow these precautions to help prevent tick bites and decrease the risk of disease:

- Use protective clothing such as long-sleeved shirts, long trousers, boots or sturdy shoes and a head covering. (Ticks are easier to detect on light-colored clothing.)
- Tuck trouser cuffs in socks. Tape the area where pants and socks meet so ticks cannot crawl under clothing.
- Apply insect repellent containing 10 to 30 percent DEET or 5 to 10 percent picaridin primarily to clothes. Apply sparingly to exposed skin. Do not spray directly to the face; spray the repellent onto hands and then apply to face. Avoid sensitive areas like the eyes, mouth and nasal membranes. Be sure to wash treated skin after coming indoors.
- Use repellents containing permethrin to treat clothes (especially pants, socks and shoes) but not skin. Always follow label directions; do not misuse or overuse repellents.
- Personnel should carefully inspect themselves each day for the presence of ticks or any rashes. This is important since prompt removal of the tick can prevent disease transmission. Remove ticks so that the tick is not crushed and ensure that the head is removed.

Poison Ivy: Poison ivy is a common cause of a skin irritation called contact dermatitis that may result in a red, itchy rash consisting of small bumps, blisters or swelling. This native perennial grows throughout the Northeast, in woods, fields, and sometimes in the garden. It grows in sun or shade, and in wet or dry places. Its growth habit depends on where it is growing, resulting in a trailing ground cover, free-standing shrub, or a vine supported by trees, shrubbery and fences. All parts of the poison ivy plant contain, urushiol, which causes the contact dermatitis. Most exposures occur during the growing season when the presence of lush foliage increases the chance of contact, but the dormant stems and roots of the vine can cause winter exposures as well.

The best protection against poison ivy is to recognize and avoid the plant. "Leaves of three, let it be" refers to the groupings of three leaflets connected to a common stem that characterizes the plant. However, if you cannot avoid poison ivy (and poison oak or poison sumac), follow these precautions to help mitigate contact:

- Ensure protective clothing is adequately donned such as long-sleeved shirts, long trousers, boots or sturdy shoes with socks and gloves;
- Use commercially available pre-contact skin protectant towelettes or barrier cream;
- If heat stress will not be a problem, the use of Tyvek™ coveralls and nitrile gloves is recommended for areas with heavy poison ivy infestation.

If contact with poison ivy has been made or is suspected, follow these guidelines:

- As soon as possible (within 5–10 minutes of contact), wash all exposed skin with strong soap (i.e. Dawn) and water to remove the oil. If this is not possible, rinse thoroughly with water.
- Use a commercially available post-contact skin cleanser or cleanser towelettes.
- Put on gloves to remove clothes and shoes, and wash clothing in hot water and detergent to remove plant oil that may be on them.
- If a severe allergic reaction develops, seek medical attention.

4.0 PERSONAL PROTECTIVE EQUIPMENT:

Levels of protection and specific PPE will be appropriate for the hazards and operations occurring on the Site. Each employer will be responsible for ensuring that all project personnel are provided appropriate PPE as needed. When a significant change occurs, the hazards should be reassessed by the employer. The specific levels of protection and necessary components for each have been divided into four categories according to the degrees of protection afforded:

Level A - Should be worn when the highest level of respiratory, skin, and eye protection is needed.

Level B - Should be worn when the highest level of respiratory protection is needed, but a lesser level of skin protection. Level B is the primary level of choice when encountering unknown environments.

Level C - Should be worn when the criteria for using air-purifying respirators are met, and a lesser level of skin protection is needed.

Level D - Should be worn in any area where respiratory or skin hazards are essentially non-existent. It provides minimal protection against chemical hazards.

These levels of protection provided by PPE selection shall be upgraded or downgraded based upon a change in Site conditions. The level of protection adequate for most activities at the Site subject to this HASP will be **Level D**. In lieu of additional personal protection requirements; the following personal protective clothing shall be donned by Site workers and visitors conducting Site visits and non-intrusive maintenance activities:

- Steel toe safety boots
- Safety glasses
- Hard Hat
- Long sleeves, long pants, and high visibility vest or jacket
- United States Coast Guard approved flotation devices when working adjacent to water greater than 2 feet deep.
- Work gloves with appropriate cut and chemical resistance adequate for the tool or material to be handled.
- Hearing protection in areas of perceived loud noise, such as near heavy equipment in operation.

Additional personal protection requirements are anticipated if ground intrusion activities or similar activities allowable under the SMP could expose employees to Site COCs. For these situations, the employer responsible for these activities shall conduct a task-specific PPE assessment (to be included in a task-specific HASP) to ensure appropriate levels of PPE are provided.

5.0 AIR MONITORING

Air monitoring requirements shall be evaluated and implemented should ground intrusion activities occur at the Site. For non-invasive activities, not involving ground intrusion, air monitoring is not deemed necessary due to the current placement of Engineering Controls to prevent exposure to Site COCs.

For invasive activities involving ground intrusion, a task-specific air monitoring plan (as part of the task-specific HASP), including actions and action levels necessary to provide protection from overexposure to Site COCs, shall be established based on a review of the data summary provided in the SMP. The monitoring protocol and applicable action levels must be defined in the task-specific air monitoring plan correlated to the scope of work to be performed and the concentrations of COCs anticipated during work. As applicable, such monitoring will be designed for the immediate work zone where ground intrusion activities will occur, and a Community Air Monitoring Plan (CAMP) will also be established to protect the public in accordance with state regulations. The NYSDOH Generic CAMP is available in Appendix D of the SMP for reference.

Air monitoring action levels must also take into consideration the type of respirator fit testing that will be performed for onsite personnel as required by the OSHA Respiratory Protection Standard 29 C.F.R.1910.134.

6.0 DECONTAMINATION

If ground intrusive work is to be conducted with potential contact to Site impacted soil or groundwater, task-specific protocols for decontamination (to be included in a task-specific HASP) shall be established for equipment and personnel as applicable in accordance with 29 CFR 1910.120 HAZWOPER regulations. Used or contaminated decontamination fluids and disposable PPE shall be disposed of in accordance with applicable state and federal regulations.

7.0 EMERGENCY CONTACT INFORMATION

Company / Entity	Role	Name	Primary Contact Number
Site Owner	Site Owner Representative	Steve Trifiletti	Office: (718) 404-0652 Cell: (908) 578-8704
Local Fire Department	Emergency Response *Note: 911 cellular calls may be directed to NJ; In case of emergency, call local departments.*	Hastings-on-Hudson Fire Department	(914) 478-2344
Local Police		Hastings-on-Hudson Police Department	(914) 478-1322
Poison Control	Poison Emergency	U.S Poison Control Centers	(800) 222-1222
Dig Safely New York	Utility Clearance *NOTE: Advanced notice is required before any digging activity.*	New York City One Call Center and Long Island	811 (800) 272-4480
St. John's Riverside Hospital in Yonkers	Hospital (see Attachment B)	Non-Emergency Number	(914) 964-4444

JOB SAFETY ANALYSIS

Safety Information for the Field Work Site.

SITE GROUNDS INSPECTION

Scope of Work: Site grounds checks are completed at the Site for the detection of any problems or irregularities on Site.

General Precautions: There is the potential of exposure to various physical hazards such as slips, trips, and falls, and heat/cold stress, natural hazards such as insects, wildlife, ticks, and severe weather conditions. While working outdoors dehydration is always possible - drink adequate amounts of water.

Personal Protective Equipment: Safety-toe boots, hard hat, safety vest or high visibility shirt, long sleeves and long pants, cut-resistant gloves and safety glasses. Coast Guard approved safety vest if accessing berms.

TASK	POTENTIAL HAZARDS	CONTROLS
1. Task Planning/Tailgate Safety Meeting	Miscommunication of work scope and safety requirements	• Communicate plan and schedule with project team and client (if needed). • Conduct Tailgate Safety Meeting to review scope of work and specific site safety requirements and potential hazards. • Log personnel and cell phones.
2. General Grounds Check	Adverse Weather Conditions	• Obtain a weather report. Do not attempt to work in low light situations, rain, thunderstorms or the extreme hot or cold. • Wear appropriate clothing/protection for weather conditions. • Apply sunscreen.
	Slip, Trips, Falls	• Identify potential hazards such as dense brush, vines, holes or voids in the soil and lose or muddy soil conditions etc. • If going onto berms, wear a Coast Guard approved safety vest and use buddy system.
	Contact with Utilities and other Hazards	• Identify potential hazards such as overhead utilities, below grade to above grade utility transitions, elevated structures, etc.
	Contact Dermatitis	• Be aware of and identify potential hazards such as poison ivy, sumac and poison oak. • Wear appropriate gloves and skin protection to limit vegetative contact. • Wash effected areas upon contact with vegetation.
	Contact with Insects/Wildlife	• Maintain awareness of surroundings, for bird nests, bee nests, and snakes. • Avoid birds, particularly during the Spring. • Apply insect repellant. • Conduct frequent tick checks of your body. • Wear gaiters to reduce tick contact.

		Dehydration	• Drink adequate amounts of water. • Do not work in extreme heat.
	3. General Equipment Inspection	Cuts, Abrasions, Burns, Falls	• Wear appropriate PPE (Modified Level D). • Wear appropriate hand protection such as leather or cut resistant gloves as necessary. • Keep away from hot exhaust, mufflers and chains. • Ensure kill switches are functional.
		Equipment Failure	• Note any equipment failures/malfunctions or alarms and troubleshoot as necessary.
		Spills, Fires, Explosions	• Ensure that gasoline is stored in an approved safety can with spring loaded cap. • Store all containers on a level surface. • Keep hot equipment away from flammable materials. • Let engine cool prior to refueling. • Note any spills or potential hazards, manage as necessary.
	4. Site Maintenance (picking up debris, etc.)	Cuts, Exposure to Contaminants, Vacating Site	• Wear appropriate PPE, including leather gloves. • Observe surroundings for vehicular traffic. • Use grabber, to pick up items, rather than your hand to minimize contact with sharp or contaminated objects and minimize bending over. • Be sure that all equipment is turned off/on and all doors are locked, as necessary.
	Required Personal Protective Equipment (PPE): ***Modified Level D*** – Safety-toe boots, hard hat, safety vest or high visibility shirt, long sleeves and long pants, cut-resistant gloves and safety glasses.		
	Required Training: - Knowledge and experience of Site and Site equipment. - Knowledge and use of task specific PPE.		
Other Information:	Record, and follow-up with any abnormalities noticed at the Site. Do not access shore area or go onto berms without a Coast Guard approved safety vest and a buddy.		
JSA Author: **Created:** **JSA Number:**	Anne Proctor 7/1/13, Rev. 4/30/15 1		

Attachment B – Map to Hospital

Map and Directions to Nearest Hospital

Site Location: Former Tappan Terminal in Hastings-on-Hudson, NY
Vehicular Access from River Street (Map Location A)

Nearest Hospital Name: St. John's Riverside Hospital – Andrus Pavilion
Hospital Location: 967 North Broadway, Yonkers, NY (Map Location B)
Hospital Telephone: (914) 694-4444

Directions to the Hospital:

1. Go North on River Street toward West Main Street
2. Take the first right onto West Main Street (bridge over rail road)
3. Continue straight to stay on West Main Street
4. Turn right onto Southside Avenue
5. Turn left onto Pinecrest Drive
6. Slight right to stay on Pinecrest Drive
7. Turn right onto Broadway

Total Distance: 2.1 miles
Total Estimated Time: 6 minutes

Map Showing Route from the Site to the Hospital:

(Available from hospital web site.)

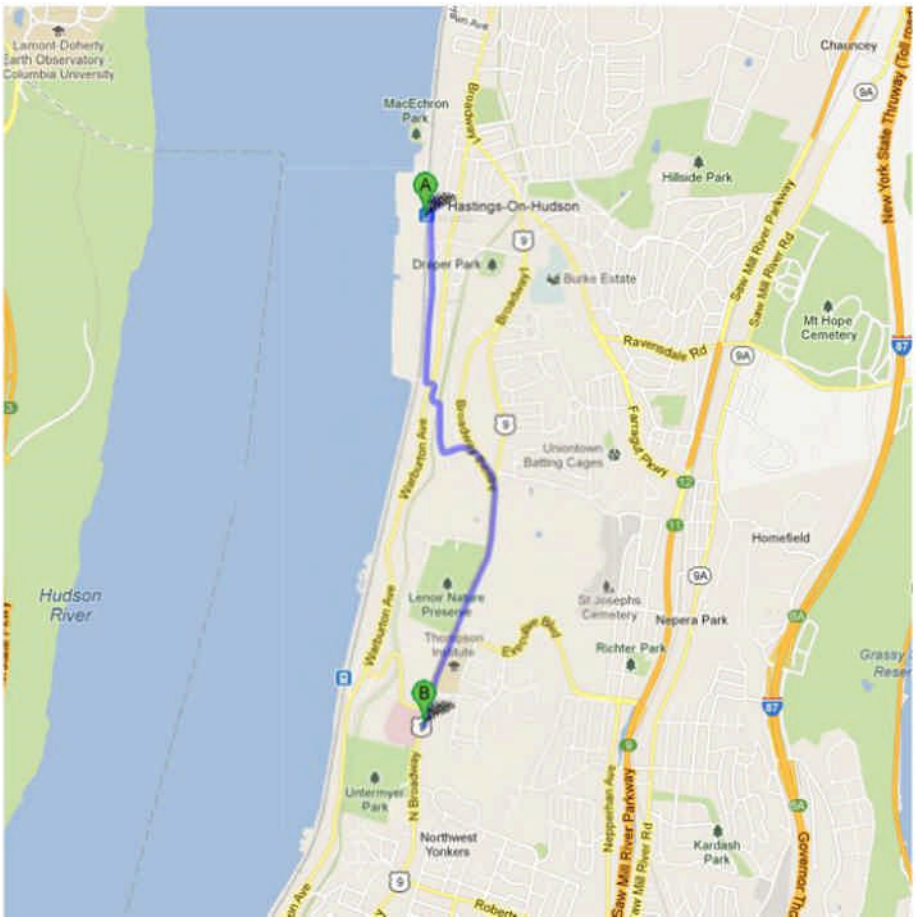

Appendix 1A
New York State Department of Health
Generic Community Air Monitoring Plan

Overview

A Community Air Monitoring Plan (CAMP) requires real-time monitoring for volatile organic compounds (VOCs) and particulates (i.e., dust) at the downwind perimeter of each designated work area when certain activities are in progress at contaminated sites. The CAMP is not intended for use in establishing action levels for worker respiratory protection. Rather, its intent is to provide a measure of protection for the downwind community (i.e., off-site receptors including residences and businesses and on-site workers not directly involved with the subject work activities) from potential airborne contaminant releases as a direct result of investigative and remedial work activities. The action levels specified herein require increased monitoring, corrective actions to abate emissions, and/or work shutdown. Additionally, the CAMP helps to confirm that work activities did not spread contamination off-site through the air.

The generic CAMP presented below will be sufficient to cover many, if not most, sites. Specific requirements should be reviewed for each situation in consultation with NYSDOH to ensure proper applicability. In some cases, a separate site-specific CAMP or supplement may be required. Depending upon the nature of contamination, chemical- specific monitoring with appropriately-sensitive methods may be required. Depending upon the proximity of potentially exposed individuals, more stringent monitoring or response levels than those presented below may be required. Special requirements will be necessary for work within 20 feet of potentially exposed individuals or structures and for indoor work with co-located residences or facilities. These requirements should be determined in consultation with NYSDOH.

Reliance on the CAMP should not preclude simple, common-sense measures to keep VOCs, dust, and odors at a minimum around the work areas.

Community Air Monitoring Plan

Depending upon the nature of known or potential contaminants at each site, real-time air monitoring for VOCs and/or particulate levels at the perimeter of the exclusion zone or work area will be necessary. Most sites will involve VOC and particulate monitoring; sites known to be contaminated with heavy metals alone may only require particulate monitoring. If radiological contamination is a concern, additional monitoring requirements may be necessary per consultation with appropriate DEC/NYSDOH staff.

Continuous monitoring will be required for all ground intrusive activities and during the demolition of contaminated or potentially contaminated structures. Ground intrusive activities include, but are not limited to, soil/waste excavation and handling, test pitting or trenching, and the installation of soil borings or monitoring wells.

Periodic monitoring for VOCs will be required during non-intrusive activities such as the collection of soil and sediment samples or the collection of groundwater samples from existing monitoring wells. “Periodic” monitoring during sample collection might reasonably consist of taking a reading upon arrival at a sample location, monitoring while opening a well cap or

overturning soil, monitoring during well baling/purging, and taking a reading prior to leaving a sample location. In some instances, depending upon the proximity of potentially exposed individuals, continuous monitoring may be required during sampling activities. Examples of such situations include groundwater sampling at wells on the curb of a busy urban street, in the midst of a public park, or adjacent to a school or residence.

VOC Monitoring, Response Levels, and Actions

Volatile organic compounds (VOCs) must be monitored at the downwind perimeter of the immediate work area (i.e., the exclusion zone) on a continuous basis or as otherwise specified. Upwind concentrations should be measured at the start of each workday and periodically thereafter to establish background conditions, particularly if wind direction changes. The monitoring work should be performed using equipment appropriate to measure the types of contaminants known or suspected to be present. The equipment should be calibrated at least daily for the contaminant(s) of concern or for an appropriate surrogate. The equipment should be capable of calculating 15-minute running average concentrations, which will be compared to the levels specified below.

1. If the ambient air concentration of total organic vapors at the downwind perimeter of the work area or exclusion zone exceeds 5 parts per million (ppm) above background for the 15-minute average, work activities must be temporarily halted and monitoring continued. If the total organic vapor level readily decreases (per instantaneous readings) below 5 ppm over background, work activities can resume with continued monitoring.

2. If total organic vapor levels at the downwind perimeter of the work area or exclusion zone persist at levels in excess of 5 ppm over background but less than 25 ppm, work activities must be halted, the source of vapors identified, corrective actions taken to abate emissions, and monitoring continued. After these steps, work activities can resume provided that the total organic vapor level 200 feet downwind of the exclusion zone or half the distance to the nearest potential receptor or residential/commercial structure, whichever is less - but in no case less than 20 feet, is below 5 ppm over background for the 15-minute average.

3. If the organic vapor level is above 25 ppm at the perimeter of the work area, activities must be shutdown.

4. All 15-minute readings must be recorded and be available for State (DEC and NYSDOH) personnel to review. Instantaneous readings, if any, used for decision purposes should also be recorded.

Particulate Monitoring, Response Levels, and Actions

Particulate concentrations should be monitored continuously at the upwind and downwind perimeters of the exclusion zone at temporary particulate monitoring stations. The particulate monitoring should be performed using real-time monitoring equipment capable of measuring particulate matter less than 10 micrometers in size (PM-10) and capable of integrating over a period of 15 minutes (or less) for comparison to the airborne particulate action level. The equipment must be equipped with an audible alarm to indicate exceedance of the action level. In addition, fugitive dust migration should be visually assessed during all work activities.

1. If the downwind PM-10 particulate level is 100 micrograms per cubic meter (mcg/m^3) greater than background (upwind perimeter) for the 15-minute period or if airborne dust is observed leaving the work area, then dust suppression techniques must be employed. Work may continue with dust suppression techniques provided that downwind PM-10 particulate levels do not exceed 150 mcg/m^3 above the upwind level and provided that no visible dust is migrating from the work area.

2. If, after implementation of dust suppression techniques, downwind PM-10 particulate levels are greater than 150 mcg/m^3 above the upwind level, work must be stopped and a re-evaluation of activities initiated. Work can resume provided that dust suppression measures and other controls are successful in reducing the downwind PM-10 particulate concentration to within 150 mcg/m^3 of the upwind level and in preventing visible dust migration.

3. All readings must be recorded and be available for State (DEC and NYSDOH) and County Health personnel to review.

December 2009

APPENDIX F

Site Inspection Form – Open Space

Former Tappan Terminal, AOC1
Former Mobil Tappan Terminal Property
Village of Hastings-on-Hudson, Westchester County, New York

Date/Time of Inspection: _____ Weather: _____

On-site Inspection Checklist	Yes	No
1. The previous Site Inspection Form (dated:_____) has been reviewed?	____	____
2. Actions identified in the previous Site Inspection Form have been completed?	____	____
3. Vegetation coverage is [ ] complete [ ] increasing appropriate to the time of year?	____	____
4. Evidence of erosion on land or evidence site has been overtopped by the river?	____	____
5. Evidence of erosion or turbidity with visual contrast to the Hudson River?	____	____
6. Evidence of oil, floating substances, visible film/sheen/globules/grease on the Hudson River?	____	____
7. Evidence of [ ] slumping, [ ] undermining, [ ] freeze/thaw (expansion/contraction) or other visible changes in [ ] vertical or [ ] horizontal alignment of the erosion protection berm?	____	____
8. Evidence of [ ] displaced stone or [ ] filter fabric visible on the erosion protection berm?	____	____
9. Evidence of [ ] sinkholes or [ ] subsidence of the soil cover?	____	____
10. Fencing and gates are secure and in good repair?	____	____
11. Evidence of trespassing/vandalism?	____	____
12. Evidence of dumping or release (discolored soil or localized stressed vegetation)?	____	____
13. The site remains unimproved and open space only?	____	____
14. The site is snow covered?	____	____
15. The last rain fall event was on date:_____ with _____ inches of rain.		
16. A marked-up map is included with this report highlighting findings of this inspection?	____	____
17. Photographs are included with this report highlighting findings of this inspection?	____	____
18. Additional pages with Comments are included with this report?	____	____

Comments (*attach additional pages as necessary*)

_____

_____

_____

_____

_____

_____

_____ _____

Signature of Inspector Name of Inspector Date

APPENDIX G

ARCADIS
Infrastructure · Water · Environment · Buildings

Imagine the result

Chevron Environmental Management Company

Final Design Report, Groundwater Remediation System

Former Tappan Terminal Site (NYSDEC Site # 360015)
Hastings-on-Hudson, New York

March 2012

ARCADIS

William T. McCune
Principal Geologist/Certified Project Manager 2

Timothy E. Miller, P.E.
Professional Engineer/Engineer of Record

Final Design Report, Groundwater Remediation System

Former Tappan Terminal Site
(NYSDEC Site # 360015)
Hastings-on-Hudson, New York

Prepared for:
Chevron Environmental Management Company

Prepared by:
ARCADIS of New York, Inc.
6723 Towpath Road
P.O. Box 66
Syracuse
New York 13214-0066
Tel 315.449.3105
Fax 315.446.5807

Our Ref.:
B0046918.0001.00003

Date:
March 2012

This document is intended only for the use of the individual or entity for which it was prepared and may contain information that is privileged, confidential and exempt from disclosure under applicable law. Any dissemination, distribution or copying of this document is strictly prohibited.

1. Introduction and Background Summary 1

1.1 Site Description and History 1

1.2 Identified Remedial Areas and COCs in Site-Wide Groundwater (AOC 3) 3

1.3 Purpose and Remedial Objectives 3

1.4 Project Roles and Responsibilities 4

1.4 Report Organization 5

2. Groundwater Remediation System Objective 7

3. Modified Design Approach 8

4. Design Flow Rates 9

4.1 System Design Flow Rationale 9

4.1.1 Basis for Infiltration Trenches 10

4.1.2 Basis for Injection Wells 10

4.2 Remediation System Design Flow 10

4.3 Oxygen Supply System Design Flow 11

5. Anticipated Groundwater Influent and Effluent Characteristics 12

6. Groundwater Remediation System Overview 13

6.1 System Overview 13

6.1.1 Extraction Wells 13

6.1.2 Equipment Enclosure and Solids Settling Tank 13

6.1.3 Infiltration Trenches and Injection Wells 16

6.1.3.1 Infiltration Trenches 16

6.1.3.2 Injection Wells 16

6.2 System Control Overview 17

6.2.1 Extraction Wells 17

6.2.2 Equipment Enclosure and Solids Settling Tank 17

6.2.3 Infiltration Trenches and Injection Wells 19

7. Utility Requirements **20**

7.1 Electrical Requirements 20

7.2 Phone Access 20

8. System Shutdown Criteria **21**

9. Cost Effective Green Remediation **24**

10. Waste Management **26**

11. Soil and Water Management **27**

11.1 Soil Handling 27

11.2 Excavation Dewatering/Water Management 27

11.3 Equipment Decontamination 28

11.4 Backfill 29

11.5 Community Air Monitoring Plan 29

12. Health and Safety **30**

13. Contingency Plan **31**

14. Operation, Maintenance, and Monitoring **32**

15. Permits, Approvals, and Notifications **33**

16. Preliminary Implementation Schedule **34**

17. Preliminary Construction and Operations Cost Estimate **35**

Figures

Figure 1 Site Location Map

Figure 2 Existing Site Plan

Figure 3 Chlorobenzene Concentrations in Groundwater

Appendices

Appendix A Groundwater Monitoring Plan

Appendix B Final Design Submittal Drawing Set

Appendix C Community Air Monitoring Plan

Appendix D Preliminary Implementation Schedule

1. Introduction and Background Summary

This design report was prepared by ARCADIS on behalf of Chevron Environmental Management Company (CEMC) to present design information for the proposed groundwater remediation system (System) to address site-wide groundwater (defined as Area of Concern [AOC] 3) at the former Tappan Terminal site located in Hastings-on-Hudson, Westchester County, New York (Site). This design report is submitted in accordance with Administrative Order on Consent Index #A3-0612-1208 to satisfy the requirements of the New York State Department of Environmental Conservation (NYSDEC) Record of Decision (ROD) dated September 2006.

The Remedial Design/Remedial Action (RD/RA) Work Plan, which was previously submitted in May 2010, presents the results and conclusions of the Phase I and Phase II pre-design investigations that were conducted at the Site.

This design report describes the selected remedial technology, which involves enhanced bioremediation of the constituents of concern (COCs) using oxygen amendment with subsequent monitored natural attenuation (MNA).

Upon review and comment of the final submittal, the design will be updated to include comments and recommended changes. Once approval of the proposed design is provided, the drawing set will be converted into a contract drawing set. The contract drawing set will be signed and stamped by the engineer of record and will be utilized as reference during construction activities.

1.1 Site Description and History

The Site is located on 7.7 acres along the Hudson River waterfront in the village of Hastings-on-Hudson, Westchester County, New York (Figure 1). The former Tappan Terminal is located adjacent to the Hudson River. The property of the former Uhlich Color Company (Uhlich) (which is located along the railroad tracks) defines the eastern boundary of the Site. A small portion of the southern end of the property is leased to the Pioneer Boat Club for use as a marina. Figure 2 shows the Existing Site Plan. Limited access to the property is from Railroad Avenue at the southeast corner of the Site and over the Zinsser Bridge that crosses the railroad tracks. Both the former Tappan Terminal and Uhlich Site are surrounded by a chain-link fence. The Zinsser Bridge has fallen into disrepair and is no longer open to vehicular traffic. An access agreement has been arranged with the adjacent Harbor-at-Hastings site to allow vehicular access to the site through the adjacent property.

The Tappan Terminal Site has a long history of manufacturing and chemical use by several owners and occupants. The landmass of the Site itself was also created by disposal of man-made fill into the Hudson River between 1868 and 1970. This fill material typically consisted of sand and gravel mixed with bricks, concrete, stone, timber, ash, slag, shells, and other debris. Between 1897 and 1955 the Site was owned by Zinsser & Company and used for the manufacture of dyes, pigments and photographic chemicals. In 1955, the Harshaw Chemical Company purchased the Zinsser Company and continued operations at the Site. In 1961, Tappan Tanker Terminal purchased the property and began operating a petroleum distribution facility on the western portion of the Site. Beginning in 1964, Paul Uhlich & Company leased, and then purchased, the eastern portion of the Site for the manufacture of pigments. This operation later became the Uhlich Color Company. Uhlich was recently acquired by Magruder Color Company, and has discontinued operations at the Hastings-on-Hudson property. In 1975, Mobil Oil Company (Mobil) purchased the western portion of the Site and continued petroleum distribution operations.

Sampling of various media at the Site was performed between 1985 and 1989. In 1987, the NYSDEC listed the Site as a Class 2 Site in the Registry of Inactive Hazardous Waste Disposal Sites in New York. A Class 2 Site is a site where hazardous waste presents a significant threat to the public health or the environment and action is required.

During a 1992 repair of a sewer pipe at the site, evidence of a petroleum release on both properties was discovered. Petroleum-impacted soil was stockpiled and later sent off Site for disposal. The extent of petroleum impacts was investigated between 1992 and 1994. In 1994, an oil remediation plan was approved under the NYSDEC's Spill Response Program and Mobil and Uhlich entered into a Stipulation Agreement to remediate this spill.

In 1996, Mobil entered into a Voluntary Agreement with the NYSDEC to investigate petroleum contamination on the western portion of the Site. Because none of the potentially responsible parties agreed to perform a comprehensive investigation of the entire Site, the Site was referred for a state-funded investigation in 1998. However, after 1998, Mobil conducted focused investigations and technology pilot studies on impacts located on their portion of the Site. Uhlich ceased operations at the Site in 2002, and most buildings at the Site were demolished in early 2003.

In addition to the Site operators identified above, several corporate mergers and acquisitions have occurred. The Harshaw Chemical Company was purchased by

Kewanee Industries in 1966, which was acquired by the Gulf Oil Corporation in 1977. Gulf Oil Corporation merged with the Chevron Chemical Corporation in 1985. Mobil Oil Corporation merged with Exxon Corporation to form Exxon/Mobil in 1999.

The Site is adjacent to the Harbor-at-Hastings Site, a Class 2 inactive hazardous waste disposal site that is contaminated with polychlorinated biphenyls, metals and polycyclic aromatic hydrocarbons.

1.2 Identified Remedial Areas and COCs in Site-Wide Groundwater (AOC 3)

The principal source of chlorobenzene appears to have been a former processing area northwest of building 57. The site conceptual model is that pigment mixtures containing chlorobenzene released near this area migrated both with groundwater flow toward the southwest and laterally to the north through the subsurface, along a former sanitary sewer line oriented perpendicular to groundwater flow. Dissolved-phase chlorobenzene in groundwater has been observed to be concentrated at several hot spot locations along the former sanitary sewer line in the immediate vicinity of the former chlorobenzene area, which is located northwest of the source area toward the Hudson River (Figure 3).

1.3 Purpose and Remedial Objectives

The remedial objectives for groundwater as defined in the ROD are to:

- Prevent ingestion of groundwater with volatile organic compound (VOC) concentrations exceeding drinking water standards.
- Prevent inhalation of VOCs from contaminated groundwater.
- Treat the source of groundwater contamination.
- Prevent the discharge of contaminants to the Hudson River.
- To the extent practicable, attain the Ambient Water Quality Standard and Guidance Values for chlorobenzene and benzene (5 and 1 microgram per liter [µg/L], respectively) for COCs in groundwater that are protective of human health and groundwater quality.

1.4 Project Roles and Responsibilities

Mark Stella will serve as CEMC's Project Manager (PM) and will direct the technical and administrative aspects of the project. Mr. Stella will be the primary CEMC contact in connection with completing all work associated with the AOC 3 RD/RA Work Plan.

The proposed ARCADIS personnel and their responsibilities include the following:

- William T. McCune will serve as PM and will manage the technical and administrative aspects of the project. Mr. McCune will confirm that the proper resources are made available to complete all work associated with the AOC 3 RD/RA Work Plan.

- Timothy E. Miller, P.E., will serve as the Professional Engineer and will provide direction, final review and internal approval of ARCADIS documents, detailed drawings and other work products developed throughout the project. Mr. Miller is a licensed Professional Engineer in New York State. Mr. Miller signed and sealed the AOC 3 RD/RA Work Plan and will sign and seal the drawing set that will be issued for construction and the Final Engineering Report detailing the implementation of the AOC 3 RD/RA Work Plan.

- The Field Manager will coordinate the implementation of the AOC 3 RD/RA Work Plan and will also communicate proposed actions and schedules for implementation of RAs at the Site to the NYSDEC. The field manager will be selected at the time of implementation.

- Mr. Greg Mason will serve as the Project Health and Safety Manager and will be responsible for the technical review and approval of the Health and Safety Plan (HASP), as well as ongoing review of project health and safety procedures implemented at the Site.

The following subcontractors will be retained during implementation of the AOC 3 RD/RA Work Plan:

- TestAmerica Laboratories, Inc., a laboratory certified by the New York State Department of Health (NYSDOH), will be retained by CEMC to provide off-site analytical services for water and soil samples collected during implementation of the AOC 3 RD/RA Work Plan.

- An appropriately licensed waste disposal contractor (to be determined) will be retained by CEMC to provide off-site transportation and treatment/disposal services for wastes generated during implementation of the AOC 3 RD/RA Work Plan.

- A qualified environmental construction contractor (to be determined) will be retained by CEMC to conduct the remedial construction activities during implementation of the remedial action phase of the AOC 3 RD/RA Work Plan.

1.4 Report Organization

The remaining sections of this design report are summarized below:

- *Section 2 – Groundwater Remediation System Objective.* Presents the System design objective.

- *Section 3 – Modified Design Approach.* Discussion of the refinement of the System design approach based on internal coordination with ARCADIS technical leaders and experts.

- *Section 4 – Design Flow Rates*. Presents the rationale for System design flow rates for water and oxygen.

- *Section 5 – Anticipated Influent and Effluent Characteristics*. Presents the anticipated influent and effluent groundwater characteristics.

- *Section 6 – Groundwater Remediation System Overview*. Presents a System overview including general System components and control rationale.

- *Section 7 – Utility Requirements*. Discussion of the utility requirements for operation of the System.

- *Section 8 – System Shutdown Criteria*. Discusses the process for transitioning from active remediation to MNA and what the transitional evaluation will consist of.

- *Section 9 – Cost Effective Green Remediation*. Discussion of the cost effective/green remediation aspects of the design.

- *Section 10 – Waste Management*. Presents the anticipated waste that will be generated during construction and operation of the System and the methods for disposal.

- *Section 11 – Soil and Water Management*. Discusses the management plan for soil and infiltration waters during System construction activities.

- *Section 12 – Health and Safety*. References the System construction and System operation health and safety aspects that will be implemented into the Site Health and Safety Plan.

- *Section 13 – Contingency Plan*. Discusses future efforts that will be implemented if the selected remedy is deemed ineffective.

- *Section 14 – Operation, Maintenance, and Monitoring*. Discusses the activities that will be specified for operation of the System.

- *Section 15 – Permits, Approvals, and Notifications*. Presents the permits, approvals, and notifications currently in progress or needed for construction/operation of the System.

- *Section 16 – Preliminary Implementation Schedule*. References the preliminary implementation schedule for System installation completion.

- *Section 17 – Preliminary Construction and Operations Cost Estimate*. References the preliminary System construction and operations costs.

2. Groundwater Remediation System Objective

The objective of the System is to accelerate the cleanup of Site groundwater by enhancing the natural biodegradation of chlorobenzene by stimulating the indigenous biological population through increased levels of DO in groundwater in conjunction with MNA, to meet the groundwater remedial cleanup goals for the Site.

The objective of the System is not to capture and treat (ex situ) groundwater contaminated with chlorobenzene, but rather to treat chlorobenzene contaminated groundwater in the subsurface with in situ, oxygen injection technology. The System extraction wells will be monitored for informational purposes to check for diminished chlorobenzene concentrations and System influent characteristics, but their primary function will be to provide water to the System for oxygen injection.

3. Modified Design Approach

As presented in the RD/RA Work Plan, the Phase II pilot study was conducted to evaluate alternative methods for enhancing the natural biodegradation of chlorobenzene by stimulating the indigenous biological population through increased levels of dissolved oxygen (DO) in groundwater. The methods used during the pilot study included oxygen infusion and hydrogen peroxide amendment. Analytical results of the groundwater samples collected during operation of the pilot study System indicated diminished chlorobenzene concentrations, demonstrating that increased levels of DO was effective at stimulating the indigenous biological population.

To provide the best technology for delivering oxygen to the source areas, the results of the pilot study were discussed with ARCADIS internal technical leaders and experts. Based on the success of the pilot study to enhance the natural bioremediation of the chlorobenzene through oxygen amendment, it was recommended that a proven, more effective oxygen delivery technology be implemented. Oxygen generation in conjunction with a venturi injector was recommended as the appropriate remedial approach as opposed to oxygen infusion and hydrogen peroxide amendment. Oxygen generation/venturi injection has been proven to provide higher concentrations of DO to source areas than oxygen infusion and hydrogen peroxide amendment. Higher DO concentration delivery could potentially decrease the time required to operate the System, resulting in reduced operational costs. The remainder of this design report will discuss the oxygen generation/venturi injector system in further detail.

4. Design Flow Rates

The design flow rates of the System have been based on previous investigations performed at the Site, including the tracer study and the volumes recorded during operation of the pilot study. The design flow rates for groundwater (extraction, infiltration and injection) and oxygen are discussed below.

4.1 System Design Flow Rationale

Solely as a basis for designing adequate pumping rates for the System, a mass balance was performed that approximated the mass of oxygen that would be needed to remediate the mass of chlorobenzene that has been estimated to exist in the subsurface of the Site (Figure 3). The volumes discussed do not precisely predict the volume of oxygenated water that will need to be injected to fully remediate the Site, but rather provide a target volume to adequately design the flow rates of the System.

Injected volumes recorded during the pilot study were considered for determining System flow rates as well as previous ARCADIS project experience related to infiltration trenches and injection wells installed at other project Sites with similar soil types.

It is estimated that 2,800 pounds of chlorobenzene exist in the subsurface of the Site. The mass of chlorobenzene was estimated using the concentration of chlorobenzene in groundwater, the concentration of total organic carbon in soil, results of the hydrogeologic characterization completed in the pre-design investigation (PDI), and the physical properties of chlorobenzene (USEPA fact sheet 794-F-007a, 1995).

Based on previous ARCADIS project experience related to these types of Systems, it can be assumed that approximately 5-pounds of oxygen is needed to remediate 1-pound of chlorobenzene. The 5:1 ratio is a conservative estimate based the physical properties of chlorobenzene and professional experience. Using the 5:1 ratio and the estimated mass of chlorobenzene on Site, 14,000 pounds of oxygen would be needed.

- 2,800 lbs chlorobenzene x (5 lbs O2/1lb CB) = 14,000 lbs O2

If a targeted groundwater DO concentration of 30 milligrams per liter (mg/L) is provided, approximately 56,000,000 gallons of oxygenated groundwater would need to be injected to the source area.

- 30 mg/L = 0.00025 lbs/Gal
- 14,000 lbs O2 x (1 Gal/0.00025 lbs) = ~56,000,000 Gal

The estimate above is based on an assumption that all of the oxygen delivered would be used to biodegrade the chlorobenzene in the source areas. The assumption does not account for the portion of the oxygen delivered that will be lost due to nitrogenous oxygen demand (NOD) and other natural oxygen sinks, prior to being delivered to the source areas. To account for these losses, it has been assumed that 3 times the volume of oxygenated water calculated above (168,000,000 gallons) will be needed to remediate the residual mass of chlorobenzene. The remedial objective of the active groundwater remedial System is to reduce the concentration of residual chlorobenzene sufficiently to allow MNA to be relied upon to meet the overall remedial objectives.

4.1.1 Basis for Infiltration Trenches

The delivery of this large volume of water will be facilitated by incorporation of long horizontal infiltration trenches, which will have the capability to accept larger volumes of oxygenated water when compared to that of the shallow vertical pilot study injection well. As mentioned, previous investigations at the Site have located 5 main source areas. An infiltration trench will be placed just upgradient of each one of these source areas. The size of each trench was determined based on the relative size of the hot spot source area.

4.1.2 Basis for Injection Wells

Injection wells will be utilized in conjunction with the infiltration trenches for the source areas down gradient of Trenches 1 and 2 (refer to Groundwater Remediation System, Drawing 1). It has been determined, based on previous Site investigation data, that some contamination exists at deeper levels below grade at the source areas down gradient of Trenches 1 and 2 than would be influenced by the infiltration trenches alone. Therefore, a pair of injection wells (two injection wells per trench) will be installed in the vicinity of Trenches 1 and 2 to further deliver oxygenated groundwater to the deeper contamination areas.

4.2 Remediation System Design Flow

Based on previous project experience, the results of the pilot study, the rationale discussed above, and an understanding of the subsurface at the Site, the design injection rate for each injection well has been calculated to be 5 gallons per minute (gpm) and the design injection rate for each of the infiltration trenches has been calculated to be 10 gpm.

Based on the design injection rates identified above, the System will be sized to pump approximately 70 gpm of oxygenated groundwater into the source areas via 4 injection wells and 5 injection trenches. For design purposes, the System will be sized (100 gpm) to adequately provide the design injection volume.

4.3 Oxygen Supply System Design Flow

Based on previous ARCADIS experience with testing similar oxygen generation/venturi injector pilot systems, an accepted and proven ratio between the groundwater flow and the oxygen required to be provided was established as 1 standard cubic foot per hour (SCFH) of oxygen per 1 gpm of groundwater. The 1:1 ratio is an approximation of the breakpoint where the gas/liquid transfer efficiency begins to level off at approximately 30 to 35 mg/L DO concentration. On a mass balance basis, the 1:1 ratio is approximately 20% gas transfer efficiency.

Therefore the oxygen supply system selected for the System (100 gpm design flow rate) is capable of supplying up to 100 SCFH of oxygen to the venturi injector.

5. Anticipated Groundwater Influent and Effluent Characteristics

Initial influent chlorobenzene concentrations from the two extraction wells are anticipated to match the concentrations previously observed from the pilot study extraction well (MW-S1), which previous analysis shows to be between 780 to 3,300 µg/L. The site wide groundwater monitoring program will be utilized to examine the effectiveness of the active remediation System. The Groundwater Monitoring Plan for the Site has been included as Appendix A.

Groundwater influent parameters of concern for System operation are ferrous iron/total dissolved solids (TDS) and total suspended solids (TSS), which can contribute to fouling in the System components, including the injection wells and infiltration trenches. Influent concentration of TDS is anticipated to be 1,000 to 1,500 parts per million. TSS influent concentration is anticipated to be relatively low based on the utilization of appropriately sized sand for the filter pack and slot size for the extraction well screened interval and thorough well development following extraction well installation. TSS will be monitored in the extraction well periodically and continued well development will be performed as needed.

Effluent DO concentrations are expected to be between 30 to 35 mg/L. The DO concentration of the effluent will be monitored throughout the operation of the System and adjustments will be made as needed to maintain the targeted DO concentration.

6. Groundwater Remediation System Overview

Provided below is the System process description inclusive of specific components. The Final Design Submittal, Groundwater Remediation System drawing set has been included as Appendix B.

6.1 System Overview

The general components of the System include: extraction wells, equipment enclosure and solids settling tank, infiltration trenches, and injection wells. Provided below is a more detailed description of each general component of the System inclusive of a discussion of individual equipment.

6.1.1 Extraction Wells

Two 6-inch diameter groundwater extraction wells (EW-1 and EW-2) will be installed to supply groundwater to the System. Each extraction well will be installed to a depth of 20-feet, constructed of 6-inch diameter steel well casing with a stainless steel screened interval from 15 to 20-feet below grade. Each extraction well head will be enclosed in an open bottom 3-feet by 2-feet concrete manhole with torsion assisted H-20 rated lockable cover door. The manholes are included in the design to provide access to instrumentation and electrical conduit, for security purposes to prevent damage due to vandalism or inadvertent collision, and for operation/maintenance purposes.

Each extraction well will be equipped with a 4-inch submersible well pump (P-100 and P-110). The well pump discharge piping will be constructed of 2-inch diameter Standard Dimension Ration (SDR) 17 high density polyethylene (HDPE) pipe that will exit the well casing below grade via a pitless adaptor. Incorporation of the pitless adaptor will allow for easy pump removal for maintenance purposes.

6.1.2 Equipment Enclosure and Solids Settling Tank

Site groundwater from the extraction wells will be conveyed below grade through 2-inch SDR 17 HDPE forcemain piping to the equipment enclosure where oxygen will be injected into the groundwater. The forcemain piping transition from below grade to the equipment enclosure will be insulated and heat traced to prevent freezing during cold months of operation. Once inside the equipment enclosure, piping will transition to 2-inch schedule 80 polyvinylchloride (PVC) and the groundwater from each

extraction well will be directed through a respective flow meter that will measure the instantaneous and totalized flow rate from each extraction well. The lines from each extraction well will combine into a 3-inch schedule 80 PVC pipe header from where it will be directed to a 1,450 gallon equalization tank (T-200).

Groundwater from T-200 will be pumped via transfer pump P-200 through the venturi injector, which amends oxygen into the groundwater flow, and then through a flash reactor to promote adequate mixing. The groundwater flow rate and pressure drop across the venturi injector are the critical components which determine the amount of oxygen that will be drawn into the System flow. The greater the pressure drop across the venturi injector, the greater the flow of oxygen that will be forced in to solution in the System discharge. The pressure drop across the venture injector is anticipated to be 20 pounds per square inch (psi).

Oxygen will be supplied to the venturi injector by the oxygen supply system which consists of a compressed air supply package system (rotary screw air compressor, air tank, and refrigerated air dryer), an oxygen generator, and an oxygen receiving tank. Solenoid valve SV-900 will be installed in the oxygen supply line to the venturi injector. The solenoid valve will automatically open and close based on System conditions, specifically the operation of transfer pump P-200. The oxygen supply line to the venturi injector will be constructed of ¼-inch steel tubing and will include a backup check valve and a flow meter for monitoring oxygen flow to the venturi injector. The oxygen supply system will be capable of supplying oxygen to the venturi injector at a rate of up to 100 SCFH.

Oxygenated groundwater from the venturi/flash reactor will then be conveyed to the exterior of the enclosure via heat traced/insulated 3-inch schedule 80 PVC to a heat traced/insulated 5,500 gallon solids settling tank (T-400) for the removal of any large suspended particles that may have precipitated out of solution as a result of groundwater oxygenation.

It is beneficial to the longevity of the System that the bulk of the precipitated solids be removed prior to discharge to the infiltration trenches and injection wells to avoid premature fouling and diminished capacity. One primary System influent concern is slightly elevated TDS, specifically dissolved ferrous iron concentration and the precipitation of iron out of solution (conversion to ferric iron) due to oxygen injection. Precipitated iron can lead to premature fouling of downstream components, including the infiltration trenches and injection wells as well as the discharge piping to each location. The solids settling tank will be installed downstream of the oxygen injection

system to assist with the removal of precipitated iron and other suspended solids to reduce precipitated solids accumulation in the downstream discharge piping, infiltration trenches, and injection wells.

To further prevent premature fouling of the injection wells/trenches and discharge piping, preventative maintenance activities will be incorporated into the operation, maintenance, and monitoring program including: periodic solids removal from the solids settling tank, periodic flushing of discharge piping by use of above grade clean-outs, periodic trench cleaning by use of above grade clean-outs, and well cleaning. Hydrogen peroxide will be used in the discharge piping, infiltration trenches, and injection wells as an anti-biofouling measure. The use of select concentration hydrogen peroxide as an anti-biofouling agent for the discharge components of the System is opportunistic because it offers an accepted and proven practice for anti-biofouling, and the use of hydrogen peroxide during the pilot study proved to diminish the concentration of chlorobenzene in groundwater.

Clarified water will gravity drain from a decant port near the top of the solids settling tank via heat traced/insulated 6-inch schedule 80 PVC back inside the equipment enclosure in to the top of a 1,450 gallon decant tank (T-300). From the decant tank, water will be conveyed through 3-inch schedule 80 PVC via injection pump P-300 to the discharge manifold. Prior to entering the discharge manifold, oxygenated water passes through a flow meter to measure the instantaneous and totalized flow injection rate. The 3-inch discharge manifold header is reduced down for each discharge location to 1-1/2-inch schedule 80 PVC. Flow to each of the five discharge locations (infiltration trenches and injection wells) is routed through a respective inline flow totalizer to record the volume of oxygenated water sent to each discharge location. Each discharge piping transition from within the equipment enclosure to below grade will be insulated and heat traced to prevent freezing during cold months of operation.

The equipment enclosure is a 40 feet by 8 feet modified shipping container equipped with barn style doors on the northern end and a man door on the western side. The equipment enclosure is also equipped with two electric unit heaters, interior and exterior lighting, exhaust fan and louver, electrical receptacles, and a leak detection sump. The equipment pad and solids settling tank will be placed on a 55-feet by 10-1/2-feet concrete pad.

6.1.3 Infiltration Trenches and Injection Wells

From the System enclosure, oxygenated groundwater is pumped to five infiltration trenches and four injection wells, which are further described below.

6.1.3.1 Infiltration Trenches

Five infiltration trenches (Trench 1, 2, 3, 4, and 5) will be constructed on site, just upgradient from each of the high concentration chlorobenzene source areas. Infiltration Trenches 1, 2, and 3 will be approximately 75-feet in length and a minimum of 3-feet wide and Trenches 4 and 5 will be approximately 50-feet in length and a minimum of 3-feet wide. The length of each infiltration trench is based on the approximate overall length of the applicable chlorobenzene plume.

Each infiltration trench will be inclusive of a 24-inch diameter prefabricated HDPE or pre-case concrete manhole, where the 1-1/2-inch HDPE discharge piping will be routed to and then down to the 4-inch diameter perforated ridged HDPE pipe at the bottom of the trench. The manhole will also house the 2-inch diameter trench access well, which will be used for sample collection as required and also to monitor for trench fouling based on increased water level in the well. Each trench will be installed with clean-outs on either end to help with trench pipe cleaning/maintenance as required. Each clean-out access point will be installed in a 6-inch by 3-feet square lockable well cover with cement base.

6.1.3.2 Injection Wells

Four injection wells (IW-1, IW-2, IW-3, and IW-4) will be constructed on site and installed in the vicinity of Trenches 1 and 2. It is anticipated that two injection wells (IW-1 and IW-2) will be installed immediately upgradient of Trench 1 and two injection wells (IW-3 and IW-4) will be installed immediately upgradient of Trench 2.

Each injection well will be installed to a depth of 20-feet, constructed of 4-inch PVC well casing with a PVC screened interval from 15 to 20-feet below grade. Each injection well head will be enclosed in an open bottom 3-feet by 4-1/2-feet concrete manhole with torsion assisted H-20 rated lockable cover door. The 1-1/2-inch HDPE discharge pipe will penetrate the wall of the concrete manhole from where it will transition to schedule 80 PVC and be directed down the injection well through a well seal. The manholes are included in the design to provide access to instrumentation

conduit, for security purposes to prevent damage due to vandalism or inadvertent collision, and for operation/maintenance purposes.

6.2 System Control Overview

Provided below is a description of the System controls for each major component of the System. All control panels for the System will be located within the equipment enclosure. The System will be equipped with an auto dialer that will be activated during alarm conditions to call the project operation team.

6.2.1 Extraction Wells

Each extraction well will be equipped with a level transducer, which will monitor the groundwater level within the well to protect the submersible well pumps from running dry. When the level in the well drops to the low-low level set point, approximately near the middle portion of the submersible well pump, the extraction well pump will shut down.

During previous investigations at the site, including the pilot study, it was observed that the wells on site recharge relatively quickly and should provide a steady supply of groundwater for the System. The level instrument will primarily be included in the well as a precautionary measure in the event water flow into the well is inhibited by screen fouling or other factors that cause diminished groundwater infiltration into the well.

Each of the extraction well influent lines will be equipped with a flowmeter to monitor influent flow from each extraction well. In the event there is a leak in the influent piping or any other malfunction that would cause a low flow situation, a low flow alarm will disable the operation of the respective extraction well pump.

6.2.2 Equipment Enclosure and Solids Settling Tank

Equalization tank T-200 is equipped with a level controller with high-high and low-low level alarm set points. The level controller will be programmed to work in tandem with the pump P-200 variable frequency drive (VFD) to maintain a specified level set point in T-200. Equalization tank T-200 will also be equipped with a low-low and a high-high level float switch. The operation of the extraction well pumps will be disabled by activation of the high-high level set point of the level controller or by the high-high level float switch.

The low-low level float switch at equalization tank T-200 protects transfer pump P-200 from running dry. Transfer pump P-200 will also be equipped with an auxiliary contact failure alarm to disable the operation of the extraction well pumps when the transfer pump is called to operate and does not respond. A pressure switch will be installed in the discharge piping of P-200 to prevent over-pressurization of the System in the event of downstream blockage or inadvertent valve closing. The P-200 discharge piping is also equipped with a flowmeter to measure flow from P-200. In the event there is a leak in the P-200 discharge piping or any other malfunction that would cause a low flow situation, a low flow alarm will disable the System.

The operation of the solenoid valve in the oxygen supply line (SV-900) to the venturi injector will be programmed to open and close based on applicable alarm conditions, specifically the operation of transfer pump P-200. When the solenoid valve closes, due to no System flow from P-200, the operation of the oxygen generator and air compressor will automatically stop by means of integrated pressure switches associated with the air compressor tank and oxygen receiving tank as designed by the manufacturer. Oxygen receiving tank T-900 will be equipped with a low pressure switch to monitor the pressure within T-900 and the oxygen pressure being supplied to the venture injector. If the low pressure set point is activated the extraction well pumps and transfer pump will shut down and valve SV-900 will close. The pumps will not operate and the valve will not open until sufficient pressure is accumulated in the oxygen receiving tank to provide the oxygen required to achieve the DO concentration needed in the discharge to the injection locations.

A high-high level float switch will be installed in solids settling tank T-400 to shut down the entire System when activated. The float is being included as a precaution if the flow out of the solids settling tank is restricted in any manner that would cause a high level tank condition. Additionally, a motorized ball valve will be installed in the equipment enclosure at the T-400 influent piping to prevent back flow of water from T-400 into the equipment enclosure. The motorized valve will be inclusive of a discord alarm to shut down System pumps and to notify System operators. The motorized valve will be programmed to open prior to activation of P-200 and will close shortly after the operation of P-200 is stopped. Additionally, the motorized valve will be equipped with battery backup to force the valve to the closed position in the event of power failure.

The operation of injection pump P-300 will be controlled by a level controller installed at decant tank T-300. The speed of P-300 will be controlled by a VFD to maintain a level set point in decant tank T-300. Decant tank T-300 will also be equipped with

high-high and low-low level float switches. Activation of the high-high level float switch will disable the extraction well pumps and transfer pump P-200 and close valve SV-900. Activation of the low-low level float switch will disable injection pump P-300 to protect the pump from running dry. A pressure switch will be installed in the discharge piping of P-300 to prevent over-pressurization of the System in the event of downstream blockage or inadvertent valve closing. The P-300 discharge piping is also equipped with a flowmeter to measure total System discharge flow to the infiltration trenches and injection wells. In the event there is a leak in the P-300 discharge piping or any other malfunction that would cause a low flow situation, a low flow alarm will disable the System.

The equipment enclosure will be equipped with a temperature transmitter and a leak detection switch. The temperature transmitter will monitor the temperature within the enclosure and will be programmed to alarm based on a low temperature set point. The leak detection switch will be installed in the leak detection sump of the enclosure and will shut down the entire System if activated.

6.2.3 Infiltration Trenches and Injection Wells

Each infiltration trench and injection well will be equipped with a level transmitter to shutdown the entire System in the event of a high-high level condition in each of the injection wells and/or infiltration trenches.

7. Utility Requirements

Utility service requirements are noted below. Steam, water, and natural gas are not required.

7.1 Electrical Requirements

The System requires a three-phase, 480 VAC power supply. Power will be routed to the System transformer (provided by utility company) from a Site utility pole which currently supplies power to the Pioneer Boat Club on the southern end of the property. It is anticipated that two new utility poles will be installed to route the needed power to the System transformer location, which will be located near the equipment enclosure. Transformer and transformer concrete pad installation specifications will be provided by the utility company. The following equipment will require electrical supply:

- Two (2) Extraction Well Pumps (P-100 and P-110) – 1.5 horse power (HP), 460 VAC, 3-phase
- Transfer Pump (P-200) – 2 HP, 460 VAC, 3-phase
- Injection Pump (P-300) – 2 HP, 460 VAC, 3-phase
- Compressed Air Package System – 7.5 HP, 460 VAC, 3-phase
- Oxygen Generator – 110/120 VAC, 1-phase
- Enclosure heating, ventilation, and lighting
- Instrumentation and control
- Heat tracing

The electrical design drawings (E01 through E05) have been included with the design drawing set.

7.2 Phone Access

A cellular modem will be installed in the main PLC panel and an antenna will be installed on the equipment enclosure for communicating System alarms and transmitting System data.

8. System Shutdown Criteria

Shutdown of the System will follow the NYSDEC Division of Environmental Remediation Technical Guidance for Site Investigation and Remediation (DER-10) and will be evaluated based on groundwater monitoring results (further in this section identify which groundwater monitoring locations will be used for determining system shutdown) collected during operation of the System. Shutdown of the System will be considered when it is determined that the Remedial Action Objectives (RAO) have been met, or that continued operation of the System is no longer effective and that a bulk reduction in contamination has been achieved by the System.

The objective of the System is to reduce the concentrations of dissolved chlorobenzene in the source areas through treatment to a level where natural attenuation processes alone would be an effective remedy. Data collected during the PDI indicated that chlorobenzene was fully degraded (mineralized) to CO_2 in downgradient monitoring wells OW-27A, ABMW-03, and MW-1A where concentrations of dissolved chlorobenzene in October 2009 ranged from 370 µg/L (ABMW-03) to 690 µg/L (OW-27A). Based on the observation that natural attenuation has been shown to be effectively reducing concentrations of chlorobenzene at the downgradient plume boundary, it is assumed that once concentrations of chlorobenzene in the source area are reduced below 1,000 parts per billion, natural attenuation alone would be an effective remedy.

It is anticipated that, prior to approaching asymptotic conditions, operation of the System will result in the reduction of the dissolved constituent concentrations such that natural attenuation alone would be an effective remedy. If concentrations of dissolved chlorobenzene in the monitoring points within the source areas (OW-12W, MW-T2, and MW-12) are observed to level off (approaching asymptotic conditions) subsequent to sustained operation of the System and optimization of the System to the extent possible, and concentrations in groundwater have been reduced to a level where natural attenuation processes can be relied upon to address residual constituents, shutdown of the System will be considered.

Continued operation of the System for a period of time prior to any proposed shutdown must confirm that asymptotic groundwater conditions have been achieved. Permanent shutdown of the System will begin with an initial System shutdown to monitor for chlorobenzene rebound in Site groundwater. After the initial shutdown, groundwater samples will be collect from the monitoring points within the source areas on a monthly basis to evaluate potential rebound of concentrations of

dissolved chlorobenzene for 6 months, with some flexibility to continue to monitor for a longer period of time to demonstrate a clear concentration trend to asymptotic conditions. The trending asymptotic concentration will then be compared to pre-shut down conditions and RAOs to make a determination if the System should continue to operate or if natural attenuation processes can be relied upon to address residual constituents.

The groundwater monitoring data will be graphically presented to illustrate the effectiveness of System operation. A minimum of eight approved groundwater data sets are typically necessary to statistically demonstrate within 95% confidence limits that asymptotic conditions have been reached. Alternative non-parametric statistical tests may be proposed.

If the post-shutdown groundwater data and concentrations are not observed to rebound substantially above the pre-shutdown concentrations, then the System can be considered to no longer be effecting contaminant concentration, and it may be appropriate for the NYSDEC to consider shutdown of the System. A decrease in contaminant levels in adjacent groundwater monitoring wells during shutdown may also be considered by the NYSDEC in justifying remedial System shutdown.

If the post system shutdown monitoring results indicate that a substantial rebound has occurred, the system will be turned back on and operated in a pulsed or other approved alternative cycle and the process will be monitored as previously discussed. Unlike a typical pulsed cycle, the system will operate continuously during the first pulse for up to three months or until groundwater conditions approach pre-shutdown conditions, then the system will be shutdown and groundwater conditions will be monitored for three months. The system will be operated in a pulse cycle for up to three cycles before a contingency plan is evaluated. The pulse cycle of three months was selected to allow time for the microbial communities to respond to the increase in oxygen by increasing the degradation of chlorobenzene.

The system treating groundwater will not be permanently shut down until the concentrations have been reduced and groundwater standards have been met at the site boundaries such that MNA will be initiated. The goal of the system is for contamination levels beyond the site boundaries will no longer be at levels which threaten public health and the environment. If the System has been operating for its anticipated duration and the RAOs have not been met following System optimization to improve System success, an evaluation of remedial alternatives will be performed

to meet RAOs, which will include the use of alternate injection locations, continued monitoring, or other appropriate alternatives.

Following active groundwater remediation, an MNA program will be initiated. The focus of this program will be to monitor the natural attenuation of remaining chlorobenzene concentrations in Site groundwater. This post-remedial monitoring will continue until the NYSDEC is adequately satisfied that the chlorobenzene plume is stable or shrinking and that no further actions are required. Groundwater monitoring methods will be used to determine the effect of natural attenuation. The factors that will be evaluated to determine if MNA will achieve the remedial goals for the site in a manner that is fully protective of all identified receptors and that monitoring can be terminated, is further detailed in the Groundwater Monitoring Plan, AOC 3, Site-Wide Groundwater Remediation, which is provided as Appendix A.

It is anticipated that the System will remain intact, but inactive during the initial implementation of the MNA program in case further System operation is required. When it is determined that the System is no longer required, the System will be dismantled and removed from the Site. A deconstruction work plan and design, including proper abandonment of wells and piping per (CP43) will be developed when appropriate.

9. Cost Effective Green Remediation

In accordance with the NYSDEC Division of Environmental Remediation DER-31 policy, remediating sites in the context of the larger environment, green engineering approaches were built-in to the design where possible. The list that follows discusses the cost effective/green remediation aspects of the design.

- System piping was combined into as few trenches as possible to limit the volume of soil that may be required to be transported off site for treatment/disposal.

- Soil that is removed as part of System construction will be prescreened in the field for segregation to limit the volume of grossly contaminated soil that would need to be transported off site for treatment/disposal.

- The incorporation of the in situ oxygen injection technology as opposed to more conventional ex situ remedial methods, such as air sparge/soil vapor extraction (AS/SVE) or multi-phase extraction (MPE), is a greener approach overall. The amount of energy required to run the more conventional systems mentioned above through the incorporation of large numbers of extraction wells, blowers, large vacuum pumps, vapor liquid separator, granular activated carbon (GAC) adsorption and/or catalytic/thermal oxidation, and water treatment equipment, would be greater than that of the selected technology. It is anticipated that the selected approach will use far less energy than the conventional methods and may also require a shorter operation period, which would also decrease the overall energy consumption.

  In addition to reduced energy consumption, the proposed system is an overall greener approach with respect to conventional ex situ remedial methods based on reduced waste generation (spent carbon/media) and the oxygen injection technology, which does not require the use of chemicals to create favorable conditions in the subsurface.

- The System has been designed with some versatility and variability to account for added capacity if needed during initial operations and diminished capacity in the future if the site requires less injection flow into the subsurface. Two extraction wells are available to supply sufficient flow for the System or one can be taken off line to supply half of the System design flow if site conditions warrant. The transfer pump and the injection pump will be controlled by VFDs to allow for the adjustment of System flow to meet site conditions. Also, the

discharge manifold of the System is designed to allow for targeted or selective discharge with the capability to throttle the flow to certain locations or take the discharge location off line all together. The rate of oxygen injection into the System flow can be varied as well dependent upon the site conditions.

- Solids settling tank T-400 was incorporated to remove the bulk of precipitated solids from the discharge flow to prevent the premature fouling of the injection trenches, injection wells, and discharge piping to prolong the life expectancy of the injection locations. Prolonging the life of the System discharge components will prevent the need to perform maintenance activities on these System components adding to the overall efficiency of the project. Preventative maintenance activities will also be included in our operation and maintenance plan to periodically clean the injection trenches, injection wells, and discharge piping with hydrogen peroxide. The periodic cleaning of the discharge piping, infiltration trenches, and injection wells will be accomplished using hydrogen peroxide at select concentrations. The use of hydrogen peroxide as a cleaning agent for the discharge components of the System is opportunistic and also adds to the overall efficiency of the project, because it offers an accepted and proven practice for cleaning the discharge components of the System and the use of hydrogen peroxide during the pilot study proved to diminish the concentration of chlorobenzene in groundwater.

Equipment such as pumps, tanks, instrumentation, and specialized equipment (oxygen supply system) were selected based on the proven operation at other project sites or for the specialized nature of the equipment and the reputable providers of such equipment.

10. Waste Management

A waste management contractor will be retained by CEMC to provide off-site transportation and treatment/disposal services for wastes generated during construction activities. Prior to demobilization, all wastes will be removed from the site or treated on site, including general refuse and other materials generated during construction activities such as liquid from decontamination activities and soil material that was deemed unusable for grading and/or backfill.

The primary waste that will be generated by operation of the System will be the solids that accumulate in the process tanks. The solids will be removed from the tanks as part of routine operation and maintenance on a periodic basis or as needed. The solids that accumulate in the tanks will be sampled for waste characterization and profiling for disposal purposes prior to a contractor being deployed to site, when needed, to remove the solids from the tanks.

11. Soil and Water Management

Activities that will be performed for proper soil and water management during construction activities are discussed below.

11.1 Soil Handling

All Excavated soils will be handled in accordance with regulations set forth by the NYSDEC and USEPA. A Soil Management Plan is currently being developed and will be provided under a separate cover prior to the start of construction activities.

11.2 Excavation Dewatering/Water Management

Excavation activities during System construction will primarily be completed at elevations above the water table; however, the infiltration of groundwater into excavated areas is probable based on existing groundwater table elevation. Additionally, precipitation and surface-water runoff are other potential sources of water infiltration into excavated areas that may need to be managed. The selected remediation contractor will be directed to propose an excavation dewatering plan as part of the request for proposal (RFP) submittal process and to mobilize the appropriate equipment to the site. The RFP will require the prospective contractor to include surface-water diversion methods in the proposed plan, which will be used to minimize the amount of runoff that enters the excavated areas. Surface-water diversion methods may include, but are not limited to, channeling surface-water flow around the excavation area by constructing berms to create a preferential flow path.

Excavation dewatering will likely be accomplished by pumping from a low point (sump) created within the excavations. Alternatively, this may be accomplished by pumping from one or more wells installed near the excavations. If water is to be pumped directly from the excavations, actions will be taken, if needed, to reduce the amount of solids that mix with the water. This can be accomplished by placing the end of the suction hose used for pumping into a cylindrical object (e.g., corrugated metal pipe or 55-gallon drum) that will be perforated, wrapped in a non-woven geotextile and placed in the low point of the excavation.

Water pumped from the excavations (and equipment decontamination waters, further discussed below) will be treated on-site by a temporary water treatment system and discharged to surface water. Based on recent excavation activities performed at the Site, a temporary surface water discharge permit is in place and a temporary water

treatment system, which meets the needs for the Site is readily available for deployment. The temporary water treatment system will consist of a diesel dewatering pump, bag filtration, organoclay filtration, carbon filtration, frac tanks, and frac tank circulation (pH adjustment as needed).

11.3 Equipment Decontamination

Equipment and materials that come in contact with impacted soil (e.g., trenching equipment, trucks, and hand tools) will be decontaminated prior to handling clean materials and prior to demobilization from the site. The equipment decontamination will be performed to prevent cross-contamination on site and off site. The contractor will select means and methods for equipment decontamination activities, which will be evaluated during contractor selection and the design process. A decontamination area cross section detail has been included in the design drawing set located in Appendix B. Specific equipment cleaning procedures will be required including, but not limited to, the following:

- Each transport vehicle will be visually inspected before leaving the loading area. Accumulations of soil on the vehicle tires or other exterior surfaces will be removed manually or, if necessary, by using a high-pressure water and/or steam spray in the equipment decontamination area. Material handling equipment that has come into contact with waste-containing soils will be cleaned in the equipment decontamination area before it enters non-work areas, handles “clean” materials (e.g., backfill) or leaves the site.

- Liquid materials, such as decontamination water (and other residual material collected during equipment decontamination) will be treated on-site through the temporary water treatment system.

- Solids and other waste materials generated by equipment decontamination will be containerized for off-site disposal. When impacted soil transport activities are in progress, the residual solid wastes may be included with the off-site shipments of impacted soil.

Heavy equipment (e.g., excavators, loaders) will be visually inspected following final equipment cleaning. If the visual inspection indicates that waste materials remain, the equipment will be re-cleaned and re-inspected.

11.4 Backfill

Trench and excavation backfilling requirements will be in accordance with regulations set forth by the NYSDEC and USEPA and will be furthered discussed in the Soil Management Plan. During backfilling, the contractor will place strips of utility warning tape with wire for metal detection in all trenched areas at a depth of 6-inches below grade. Backfilling specifications (e.g., sand bedding, required lifts, compaction, etc.) and final grading/restoration are provided in the design drawing set.

11.5 Community Air Monitoring Plan

A Community Air Monitoring Plan (CAMP) has been developed for the site to provide a measure of protection of the downwind communities from potential airborne releases of constituents of concern during construction activities. The full CAMP is attached as Appendix C.

12. Health and Safety

Prior to System construction, a design safety review (DSR) will be performed to verify that all regulatory requirements are being met with respect to System operation and to verify that the proper control measures have been included to prevent any potential unsafe conditions. Prior to System startup, following construction, a pre-startup safety review (PSSR) will be conducted to verify that the System was constructed as designed and that all control measures are in place.

The existing site-specific Health and Safety Plan will be updated to include the health and safety needs for System construction and operation activities, including a traffic control plan. All aspects of the plan will be reviewed and an acknowledgement signature will be required by all personnel working on the construction project and operating the System prior to starting work on site. Additions/modifications to the existing plan will include, but are not limited to, the following:

- Requirements for daily tailgate safety meetings with System construction contractors.
- Requirements for working with heavy equipment/machinery, confined space entry, electrical safety and other requirements as deemed necessary.
- Incorporation of the Loss Prevention System (LPS), including requirements for performing Loss Prevention Observations (LPO) on contractors/operators, followed by a review of the results with all contractors/operators on site during tailgate safety meetings.
- Development of Job Loss Analyses (JLA) for specific critical tasks to be performed by contractors/operators.
- Specifications for site security, control and access.

An updated site-specific health and safety plan will be provided prior to initiating construction activities.

13. Contingency Plan

If the selected remedy is deemed ineffective, CEMC will prepare and submit an AOC 3 RD/RA Work Plan for installation of a contingency remedial approach consistent with the AS/SVE remedy, as presented in the September 2006 ROD for the Site or another remedy considered technically appropriate and acceptable to NYSDEC.

The performance of the System will be monitored to determine effectiveness. The effectiveness will be evaluated based on a review of System data and groundwater monitoring results as detailed above in Section 8, System Shutdown Criteria.

14. Operation, Maintenance, and Monitoring

Prior to System start-up, an operation, maintenance, and monitoring manual will be developed for the System for use by System operators. The manual will include the following elements:

- General System Overview
- System Process and Components
- System Startup and Shutdown
- System Monitoring and Maintenance
- Information Management
- Sampling and Analysis
- Laboratory Requirements
- Management of Change Procedures
- Training and Awareness
- Health and Safety
- Emergency Response
- Waste Management

Prior to System startup, System operators will be trained on the operation of the System as well as the required monitoring and reporting requirements as applicable. It is anticipated that System sampling for System optimization, will be required frequently during initial operations to fine tune the oxygen delivery capability and periodically (monthly/quarterly) thereafter to monitor System performance. Influent and discharge samples of the solids settling tank decant water will be collected to measure DO, chlorobenzene, TDS, TSS, and iron concentrations as well as any other parameter deemed necessary during future operations. Also, the solids that accumulate in the process tanks will be sampled and analyzed for waste characterization/profiling prior to disposal.

15. Permits, Approvals, and Notifications

Communication with state and local agencies has been initiated early in the design process to comply with all appropriate permits, approvals and notifications. Prompt communication with state and local agencies will provide that the System design is developed to meet applicable permits and approvals that may be required. The anticipated permits, approvals and notifications required for construction of the System are summarized below:

- Construction permits (e.g., electrical, building)
- Utility clearance
- NYSDEC State Pollutant Discharge Elimination System General Permit for Stormwater Discharges from Construction Activities
- Temporary excavation infiltration water treatment system surface water discharge
- United States Environmental Protection Agency (USEPA) Class V Injection Well Permit
- Notice of Intent to the NYSDEC
- NYSDEC approval of the System design
- City, county, state, community and other required permits, approvals and notifications (abandoned sewer line and fire water line)

Additional permits, approvals and notifications may be identified as construction implementation advances.

16. Preliminary Implementation Schedule

A preliminary implementation schedule, which describes the various components associated with completing the System construction activities, has been included as Appendix D. It is currently anticipated that construction activities will begin in June, 2012.

The schedule represents the first attempt at establishing an implementation schedule for construction of the System and several factors affect the actual schedule that will develop as the start of construction approaches, including the time required for submittal reviews, defined equipment lead times as more proposals are received, contractor availability, and the permitting process. The schedule could be delayed or improved dependent upon activities following this submittal.

17. Preliminary Construction and Operations Cost Estimate

The cost estimates represent the current evaluation based on equipment required, expected construction requirements, expected operating costs, vendor quotes, and engineering judgment. The cost to construct the System is approximately $1,520,000. The cost to operate the System for a three year period is approximately $380,000. Cost for construction and operation of the System will be refined as vendor and subcontractor quotes continue to be received.

Figures

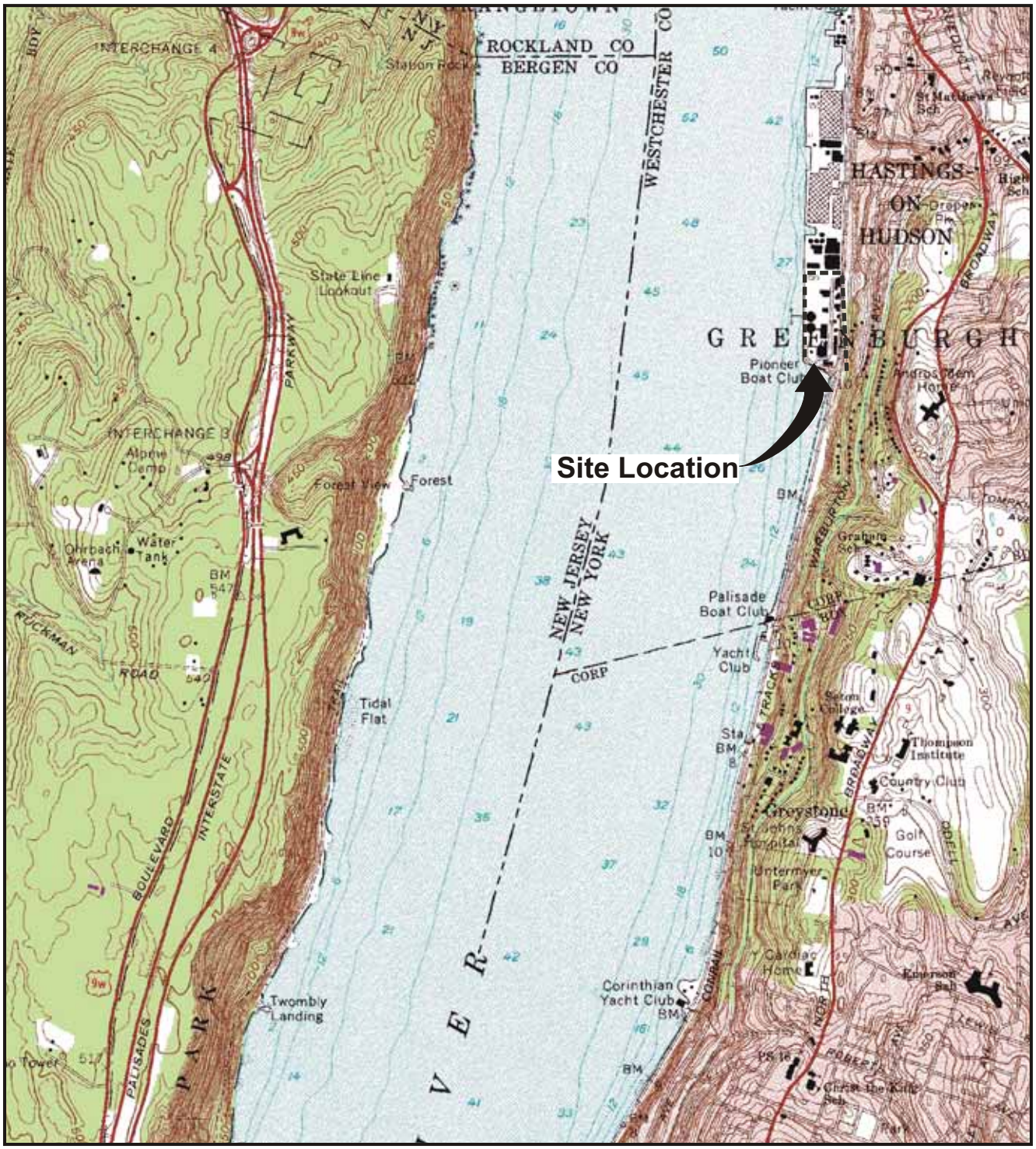

REFERENCE: BASE MAP USGS 7.5 MIN. QUAD., YONKERS, N.Y. - N.J., 1966, PHOTOREVISED 1979.

2000' 0 2000'

Approximate Scale: 1" = 2000'

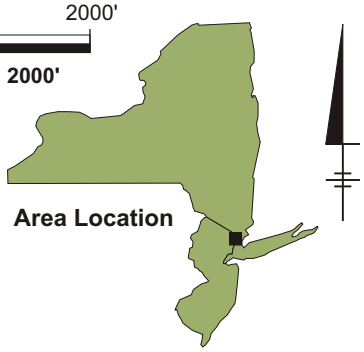

FORMER TAPPAN TERMINAL SITE
HASTINGS-ON-HUDSON, NEW YORK
GROUNDWATER REMEDIATION SYSTEM

SITE LOCATION MAP

ARCADIS

FIGURE
1

10/08/2010 SYRACUSE, NY-ENV/CAD-DHOWES
B0046918/0000/00001/CDR/46918N01.CDR

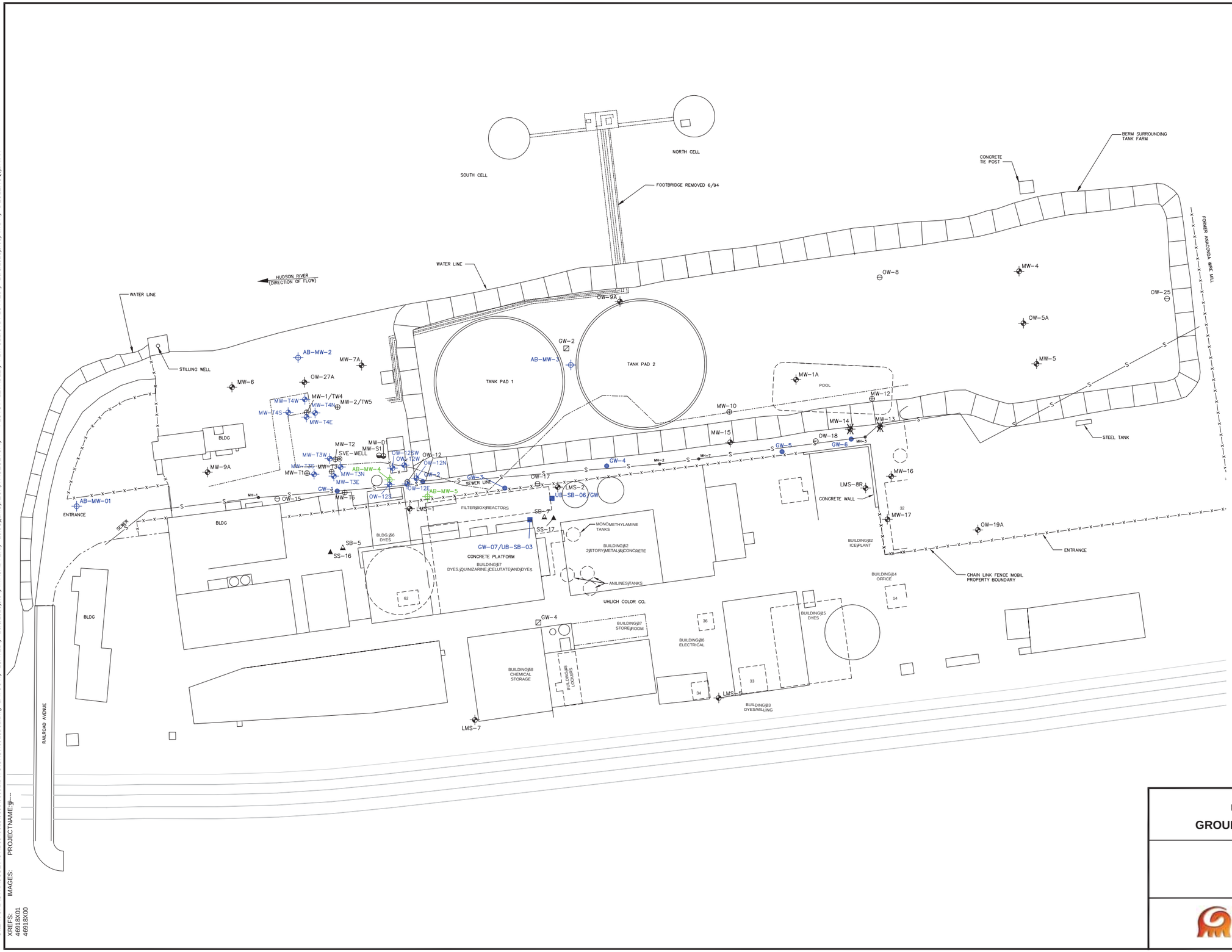

LEGEND:

- MW-6 — DESTROYED WELL
- PILOT TEST MONITORING WELL (INSTALLED BY ARCADIS)
- MONITORING WELL
- SOIL BORING WITH GROUNDWATER COLLECTED SAMPLES (PDI INVESTIGATION 2008)
- SUPPLEMENTAL SOIL BORING WITH GROUNDWATER COLLECTED SAMPLES
- DNAPL MONITORING WELL (INSTALLED BY ARCADIS)
- MW-10 — 4-INCH-DIAMETER NEW MONITOR WELL
- MW-6 — 4-INCH-DIAMETER MONITORING WELL
- OW-1 — 2-INCH-DIAMETER OBSERVATION WELL
- MW-D1 — 6-INCH-DIAMETER TEST WELL
- GW-4 — GROUNDWATER SAMPLE
- MH-7 — SANITARY SEWER MANHOLE
- SB-17 — SOIL SAMPLING LOCATION COMPLETED IN 1998 BY DVIRKA AND BARTILUCCI
- SB-7 — SUBSURFACE SOIL BORING
- S — SANITARY SEWER
- APPROXIMATE SHORELINE IN 1950
- BUILDINGS PRESENT ON SITE CIRCA 1955
- TANKS PRESENT ON SITE CIRCA 1955

NOTE:

1. BASEMAP PROVIDED BY WOODARD & CURRAN, FIGURE 1, TITLED "GROUNDWATER CONTOUR PLAN" DATED JAN 2002 AND REVISED BASED ON SURVEY COMPLETED BY ARCADIS IN MAY 2008.

0 50' 100'
GRAPHIC SCALE

FORMER TAPPAN TERMINAL SITE
HASTINGS ON HUDSON, NEW YORK

GROUNDWATER REMEDIATION SYSTEM

EXISTING SITE PLAN

ARCADIS

FIGURE
2

CITY:SYRACUSE DIV/GROUP:41 DB:GMS KFS GMS PM:(Reid) LT:YR:ON=*;OFF=*REF
G:\ENVCAD\SYRACUSE\ACT\B0046918\0000\00001\DWG\GRS\46918B01.dwg LAYOUT:2 SAVED:10/8/2010 9:04 AM ACADVER:18.0S (LMS TECH) PAGESETUP:---- PLOTSTYLETABLE:PLTFULL.CTB PLOTTED:10/8/2010 9:06 AM BY:DECLERCQ, BRIAN
XREFS: 46918X01 46918X00 IMAGES: PROJECTNAME:

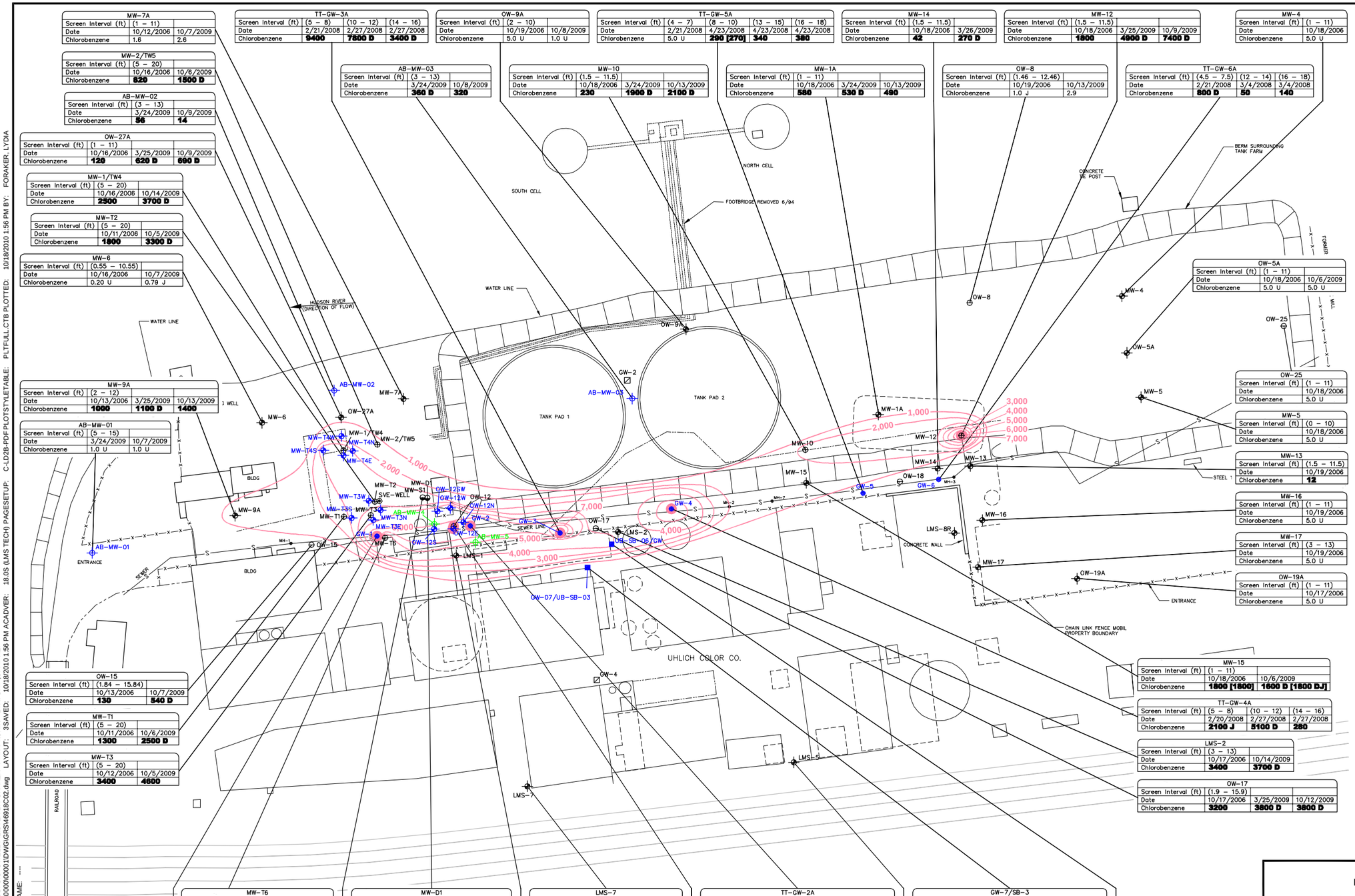

MW-7A		
Screen Interval (ft)	(1 – 11)	
Date	10/12/2006	10/7/2009
Chlorobenzene	1.6	2.6

MW-2/TW5		
Screen Interval (ft)	(5 – 20)	
Date	10/16/2006	10/6/2009
Chlorobenzene	**820**	**1500 D**

AB-MW-02		
Screen Interval (ft)	(3 – 13)	
Date	3/24/2009	10/9/2009
Chlorobenzene	**56**	**14**

OW-27A			
Screen Interval (ft)	(1 – 11)		
Date	10/16/2006	3/25/2009	10/9/2009
Chlorobenzene	**120**	**620 D**	**690 D**

MW-1/TW4		
Screen Interval (ft)	(5 – 20)	
Date	10/16/2006	10/14/2009
Chlorobenzene	**2500**	**3700 D**

MW-T2		
Screen Interval (ft)	(5 – 20)	
Date	10/11/2006	10/5/2009
Chlorobenzene	**1800**	**3300 D**

MW-6		
Screen Interval (ft)	(0.55 – 10.55)	
Date	10/16/2006	10/7/2009
Chlorobenzene	0.20 U	0.79 J

MW-9A			
Screen Interval (ft)	(2 – 12)		
Date	10/13/2006	3/25/2009	10/13/2009
Chlorobenzene	**1000**	**1100 D**	**1400**

AB-MW-01		
Screen Interval (ft)	(5 – 15)	
Date	3/24/2009	10/7/2009
Chlorobenzene	1.0 U	1.0 U

OW-15		
Screen Interval (ft)	(1.84 – 15.84)	
Date	10/13/2006	10/7/2009
Chlorobenzene	**130**	**540 D**

MW-T1		
Screen Interval (ft)	(5 – 20)	
Date	10/11/2006	10/6/2009
Chlorobenzene	**1300**	**2500 D**

MW-T3		
Screen Interval (ft)	(5 – 20)	
Date	10/12/2006	10/5/2009
Chlorobenzene	**3400**	**4600**

TT-GW-3A			
Screen Interval (ft)	(5 – 8)	(10 – 12)	(14 – 16)
Date	2/21/2008	2/27/2008	2/27/2008
Chlorobenzene	**9400**	**7800 D**	**3400 D**

OW-9A		
Screen Interval (ft)	(2 – 10)	
Date	10/19/2006	10/8/2009
Chlorobenzene	5.0 U	1.0 U

TT-GW-5A				
Screen Interval (ft)	(4 – 7)	(8 – 10)	(13 – 15)	(16 – 18)
Date	2/21/2008	4/23/2008	4/23/2008	4/23/2008
Chlorobenzene	5.0 U	**290 [270]**	**340**	**380**

MW-14		
Screen Interval (ft)	(1.5 – 11.5)	
Date	10/18/2006	3/26/2009
Chlorobenzene	**42**	**270 D**

MW-12			
Screen Interval (ft)	(1.5 – 11.5)		
Date	10/18/2006	3/25/2009	10/9/2009
Chlorobenzene	**1800**	**4900 D**	**7400 D**

MW-4	
Screen Interval (ft)	(1 – 11)
Date	10/18/2006
Chlorobenzene	5.0 U

AB-MW-03		
Screen Interval (ft)	(3 – 13)	
Date	3/24/2009	10/8/2009
Chlorobenzene	**360 D**	**320**

MW-10			
Screen Interval (ft)	(1.5 – 11.5)		
Date	10/18/2006	3/24/2009	10/13/2009
Chlorobenzene	**230**	**1900 D**	**2100 D**

MW-1A			
Screen Interval (ft)	(1 – 11)		
Date	10/18/2006	3/24/2009	10/13/2009
Chlorobenzene	**580**	**530 D**	**490**

OW-8		
Screen Interval (ft)	(1.46 – 12.46)	
Date	10/19/2006	10/13/2009
Chlorobenzene	1.0 J	2.9

TT-GW-6A			
Screen Interval (ft)	(4.5 – 7.5)	(12 – 14)	(16 – 18)
Date	2/21/2008	3/4/2008	3/4/2008
Chlorobenzene	**800 D**	**50**	**140**

OW-5A		
Screen Interval (ft)	(1 – 11)	
Date	10/18/2006	10/6/2009
Chlorobenzene	5.0 U	5.0 U

OW-25	
Screen Interval (ft)	(1 – 11)
Date	10/18/2006
Chlorobenzene	5.0 U

MW-5	
Screen Interval (ft)	(0 – 10)
Date	10/18/2006
Chlorobenzene	5.0 U

MW-13	
Screen Interval (ft)	(1.5 – 11.5)
Date	10/19/2006
Chlorobenzene	**12**

MW-16	
Screen Interval (ft)	(1 – 11)
Date	10/19/2006
Chlorobenzene	5.0 U

MW-17	
Screen Interval (ft)	(3 – 13)
Date	10/19/2006
Chlorobenzene	5.0 U

OW-19A	
Screen Interval (ft)	(1 – 11)
Date	10/17/2006
Chlorobenzene	5.0 U

MW-15		
Screen Interval (ft)	(1 – 11)	
Date	10/18/2006	10/6/2009
Chlorobenzene	**1800 [1800]**	**1600 D [1800 DJ]**

TT-GW-4A			
Screen Interval (ft)	(5 – 8)	(10 – 12)	(14 – 16)
Date	2/20/2008	2/27/2008	2/27/2008
Chlorobenzene	**2100 J**	**5100 D**	**280**

LMS-2		
Screen Interval (ft)	(3 – 13)	
Date	10/17/2006	10/14/2009
Chlorobenzene	**3400**	**3700 D**

OW-17			
Screen Interval (ft)	(1.9 – 15.9)		
Date	10/17/2006	3/25/2009	10/12/2009
Chlorobenzene	**3200**	**3800 D**	**3800 D**

MW-T6		
Screen Interval (ft)	(5 – 20)	
Date	10/11/2006	10/5/2009
Chlorobenzene	**4700**	**4600 D**

MW-D1		
Screen Interval (ft)	(46.5 – 66.5)	
Date	10/13/2006	10/6/2009
Chlorobenzene	5.0 U	**17**

LMS-7		
Screen Interval (ft)	(5 – 15)	
Date	10/12/2006	10/7/2009
Chlorobenzene	0.20 U	1.0 U

TT-GW-2A			
Screen Interval (ft)	(6 – 9)	(10 – 12)	(14 – 16)
Date	2/20/2008	2/27/2008	2/27/2008
Chlorobenzene	**540**	**5800**	**5900**

GW-7/SB-3			
Screen Interval (ft)	(8 – 10)	(13 – 15)	(16 – 18)
Date	4/22/2008	4/22/2008	4/22/2008
Chlorobenzene	**35**	**460**	**170**

TT-GW-1A				
Screen Interval (ft)	(5 – 7)	(10 – 12)	(14 – 16)	(18 – 20)
Date	2/20/2008	2/26/2008	2/26/2008	2/26/2008
Chlorobenzene	**2600 [2300]**	**2800**	**4000 D**	**6600 D**

MW-S1		
Screen Interval (ft)	(3 – 23)	
Date	10/17/2006	10/6/2009
Chlorobenzene	**780**	**3300**

LMS-1		
Screen Interval (ft)	(4 – 14)	
Date	10/11/2006	10/6/2009
Chlorobenzene	**4000**	**3200**

OW-12			
Screen Interval (ft)	(1 – 15)		
Date	10/17/2006	3/25/2009	10/7/2009
Chlorobenzene	**6100**	**6100 D [6500 D]**	**3100 D [3500 D]**

LMS-5		
Screen Interval (ft)	(3 – 13)	
Date	10/17/2006	10/12/2009
Chlorobenzene	**16 [16]**	1.0 U

UC-SB-6			
Screen Interval (ft)	(8 – 10)	(13 – 15)	(16 – 18)
Date	4/21/2008	4/21/2008	4/21/2008
Chlorobenzene	**4000**	**700**	**780**

LEGEND:

- PILOT TEST MONITORING WELL (INSTALLED BY ARCADIS)
- MONITORING WELL
- SOIL BORING WITH GROUNDWATER COLLECTED SAMPLES
- SUPPLEMENTAL SOIL BORING WITH GROUNDWATER COLLECTED SAMPLES
- DNAPL MONITORING WELL (INSTALLED BY ARCADIS)
- MW-10 4-INCH-DIAMETER NEW MONITOR WELL
- MW-6 4-INCH-DIAMETER MONITORING WELL
- OW-1 2-INCH-DIAMETER OBSERVATION WELL
- MW-D1 6-INCH-DIAMETER TEST WELL
- GW-4 GROUNDWATER SAMPLE
- MH-7 SANITARY SEWER MANHOLE
- SB-7 SUBSURFACE SOIL BORING
- S SANITARY SEWER
- APPROXIMATE SHORELINE IN 1950
- BUILDINGS PRESENT ON SITE CIRCA 1955
- TANKS PRESENT ON SITE CIRCA 1955
- CHLOROBENZENE ABOVE 5000 ug/L
- CHLOROBENZENE CONTOUR (BASED ON 2008 AND 2009 RESULTS ONLY) (CONCENTRATION IN ug/L)

NOTES:

1. BASEMAP PROVIDED BY WOODARD & CURRAN, FIGURE 1, TITLED "GROUNDWATER CONTOUR PLAN" DATED JAN 2002 AND REVISED BASED ON SURVEY COMPLETED BY ARCADIS IN 2008.
2. D = CONCENTRATION IS BASED ON A DILUTED SAMPLE ANALYSIS
3. U = CONCENTRATION NOT DETECTED AT ASSOCIATED DETECTION LIMIT
4. J = THE COMPOUND WAS POSITIVELY IDENTIFIED, HOWEVER, THE ASSOCIATED NUMERICAL VALUE IS AN ESTIMATED CONCENTRATION ONLY.
5. GROUNDWATER SAMPLES COLLECTED DURING THE PDI PILOT STUDY HAVE NOT BEEN INCLUDED.
6. BOLD RESULTS EXCEED NYSDEC TOGS 1.1.1 WATER QUALITY STANDARD.
7. DUPLICATE RESULTS ARE SHOWN IN BRACKETS.

0 50' 100'
GRAPHIC SCALE

FORMER TAPPAN TERMINAL SITE
HASTINGS ON HUDSON, NEW YORK

GROUNDWATER REMEDIATION SYSTEM

CHLOROBENZENE CONCENTRATIONS IN GROUNDWATER

ARCADIS

FIGURE
3

CITY: SYRACUSE GROUP: ENVCAD DB: G.STOWELL P.LISTER L. FORAKER PM: A. KORIK LYR: ON=*;OFF=*REF
G:\ENVCAD\SYRACUSE\ACT\B0046918\0000\00001\DWG\GRS\46918C02.dwg LAYOUT: 3SAVED: 10/18/2010 1:56 PM ACADVER: 18.0S (LMS TECH) PAGESETUP: C-LD2B-PDF.PLOTSTYLETABLE: PLTFULL.CTB PLOTTED: 10/18/2010 1:56 PM BY: FORAKER, LYDIA
XREFS: 46918X01 46918X00 IMAGES: PROJECTNAME: ----

Appendix A

Groundwater Monitoring Plan

ARCADIS
Infrastructure · Water · Environment · Buildings

Imagine the result

Chevron Environmental Management Company

Groundwater Monitoring Plan, AOC 3, Site-Wide Groundwater Remediation

Tappan Terminal Site (NYSDEC Site # 360015)
Hastings-on-Hudson, New York

March 2012
Revised May 2012

ARCADIS

William T. McCune
Principal Geologist

Groundwater Monitoring Plan, AOC 3, Site-Wide Groundwater Remediation

Tappan Terminal Site
(NYSDEC Site # 360015)
Hastings-on-Hudson, New York

Prepared for:
Chevron Environmental Management Company

Prepared by:
ARCADIS of New York, Inc.
6723 Towpath Road
P.O. Box 66
Syracuse
New York 13214-0066
Tel 315.446.9120
Fax 315.446.8053

Our Ref.:
B0046918.0001.00003

Date:
March 2012
Revised May 2012

This document is intended only for the use of the individual or entity for which it was prepared and may contain information that is privileged, confidential and exempt from disclosure under applicable law. Any dissemination, distribution or copying of this document is strictly prohibited.

Table of Contents

1. Introduction 1

1.1 General 1

1.2 Site Description and History 1

1.3 Identified Remedial Areas and COCs in Site-Wide Groundwater (AOC 3) 3

1.3.1 Apparent Source Areas 3

1.3.2 Volatile Organic Compounds 3

1.3.3 SVOCs 4

1.4 Remedial Objectives 4

1.5 Project Roles and Responsibilities 4

2. Groundwater Monitoring Activities 6

2.1 Groundwater Elevation Monitoring 6

2.2 Groundwater Quality Monitoring 6

2.2.1 Phase 1 Groundwater Monitoring 6

2.2.2 System Shutdown Groundwater Monitoring 7

2.2.3 Phase 2 Groundwater Monitoring 7

2.3 Reporting 8

3. Groundwater Monitoring Well Network 9

3.1 Monitoring Well Decommissioning 9

3.2 Monitoring Well Installation 9

4. System Shutdown Criteria 10

5. References 13

Table

1 Summary of Groundwater Monitoring Plan

Figures

1 Site Location Map

2 Groundwater Monitoring Locations – Phase I

3 Groundwater Monitoring Locations – Phase II

Attachment

A ARCADIS SOPs

1. Introduction

1.1 General

This Groundwater Monitoring Plan, AOC 3, Site-Wide Groundwater Remediation (Groundwater Monitoring Plan) has been prepared on behalf of Chevron Environmental Management Company (CEMC) as part of the remedial activities to address site-wide groundwater (defined as Area of Concern [AOC] 3) at the Tappan Terminal Site (3-60-015) located in Hastings-on-Hudson, Westchester County, New York (site) (Figure 1). This Groundwater Monitoring Plan is submitted in accordance with Administrative Order on Consent Index #A3-0612-1208 to support remedial actions (RAs) to be implemented at the site to satisfy the requirements of the New York State Department of Environmental Conservation (NYSDEC) Record of Decision (ROD) dated September 2006 (NYSDEC 2006).

The following documents will be used in conjunction with this Groundwater Monitoring Plan (as applicable) and were submitted to the NYSDEC with the Pre-Design Groundwater Investigation Work Plan (ARCADIS BBL, 2007):

- amended site-specific Health and Safety Plan (HASP)
- ARCADIS Standard Operating Procedures (SOPs)
- Quality Assurance Project Plan

1.2 Site Description and History

The site is located on 7.7 acres along the Hudson River waterfront, in the village of Hastings-on-Hudson, Westchester County, New York (Figure1). The former Tappan Terminal is located along the eastern bank of the Hudson River with the Uhlich Color Company (Uhlich) located along the railroad tracks that defines the eastern boundary of the site. A small portion of the southern end of the property is leased to the Pioneer Boat Club for use as a marina. Limited access to the site is from Railroad Avenue at the southeast corner of the site and over the Zinsser Bridge that crosses the railroad tracks. This bridge has fallen into disrepair and is no longer open to vehicular traffic. Both the former Tappan Terminal and Uhlich Color Company Site are surrounded by a chain-link fence.

The Tappan Terminal site has a long history of manufacturing and chemical use by several owners and occupants. The site itself is located on reclaimed land that was created by placement of man-made fill onto the banks of the Hudson River between

1868 and 1970. This fill material typically consisted of sand and gravel mixed with bricks, concrete, stone, timber, ash, slag, shells, and other debris. Between 1897 and 1955 the site was owned by Zinsser & Company and used for the manufacture of dyes, pigments and photographic chemicals. In 1955, the Harshaw Chemical Company purchased the Zinsser Company and continued operations at the site. In 1961, Tappan Tanker Terminal purchased the property and began operating a petroleum distribution facility on the western portion of the site. Beginning in 1964, Paul Uhlich & Company leased, and then purchased, the eastern portion of the site for the manufacture of pigments. This operation later became the Uhlich Color Company. The Uhlich Color Company was recently acquired by Magruder Color Company, and has discontinued operations at the Hastings-on-Hudson property. In 1975, Mobil Oil Company (Mobil) purchased the western portion of the site and continued petroleum distribution operations.

When Mobil ceased operations on their property in 1985, several oil spills and bulk storage violations were discovered. Sampling of various media at the site was performed between 1985 and 1989. In 1987, the NYSDEC listed the site as a Class 2 site in the Registry of Inactive Hazardous Waste Disposal Sites in New York. A Class 2 site is a site where hazardous waste presents a significant threat to the public health or the environment, and remedial action is required.

During a 1992 repair of a sewer pipe at the site, evidence of a petroleum release on both the eastern and western properties was discovered. Contaminated soil was stockpiled and later sent off site for disposal. The extent of petroleum contamination was investigated between 1992 and 1994. In 1994, an oil remediation plan was approved under the NYSDEC's Spill Response Program and Mobil and Uhlich entered into a Stipulation Agreement to remediate this spill.

In 1996, Mobil entered into a Voluntary Agreement with the NYSDEC to investigate petroleum contamination on the western portion of the site. Because none of the potentially responsible parties agreed to perform a comprehensive investigation of the entire site, the site was referred for a state-funded investigation in 1998. However, after 1998, Mobil conducted focused investigations and technology pilot studies on contamination located on their portion of the site. The Uhlich Color Company ceased operations at the site in 2002, and most buildings at the site were demolished in early 2003.

In addition to the site operators identified above, several corporate mergers and acquisitions have occurred. The Harshaw Chemical Company was purchased by

Kewanee Industries in 1966, which was acquired by the Gulf Oil Corporation in 1977. Gulf Oil Corporation merged with the Chevron Chemical Corporation in 1985. Mobil Oil Corporation merged with Exxon Corporation to form Exxon/Mobil in 1999.

The site is adjacent to the Harbor-at-Hastings Site, a Class 2 inactive hazardous waste disposal site that is contaminated with polychlorinated biphenyls, metals and polycyclic aromatic hydrocarbons.

1.3 Identified Remedial Areas and COCs in Site-Wide Groundwater (AOC 3)

1.3.1 Apparent Source Areas

Chlorobenzene is the primary COC in groundwater on both the eastern and western parcels. The principal source of chlorobenzene appears to have been a former aboveground storage tank (AST) located near monitoring well AB-MW-4. Available site characterization results indicate that chlorobenzene released near this AST may have migrated laterally to the north through the subsurface, along the backfill material and around a former sanitary sewer line oriented perpendicular to groundwater flow.

A secondary source area was identified upgradient of the former sanitary sewer line and downgradient of a former building in which chlorobenzene was historically handled. Dissolved-phase chlorobenzene in groundwater has been observed to be concentrated at several hot spot locations along the former sanitary sewer line near the former chlorobenzene AST, which is located northwest of the source area toward the Hudson River (Figure 3). Several semivolatile organic compounds (SVOCs) have also been detected within the chlorobenzene plume; the source area of the SVOCs has not been identified.

1.3.2 Volatile Organic Compounds

Chlorobenzene has been detected at concentrations ranging from 1 microgram per liter (µg/L) in groundwater samples collected from monitoring well OW-08 to 20,000 µg/L in groundwater at monitoring well OW-12N. Benzene was detected at concentrations ranging from 0.32 µg/L in monitoring well ABMW-02 to 23 µg/L in monitoring well MW-10. The NYSDEC Ambient Water Quality Standard and Guidance Values (Standards and Guidance Values) for chlorobenzene and benzene are 5 and 1 µg/L, respectively (NYSDEC 1998).

1.3.3 SVOCs

Historically, several SVOCs (including 1-4 dichlorobenzene, 2-chlorophenol, 4-chloroaniline and naphthalene) have been detected in groundwater above the Standards and Guidance Values (NYSDEC 1998). Maximum concentrations of these SVOCs in 2009 are presented below (respective Standards are indicated in parenthesis):

- 1-4-dichlorobenzene at 12 µg/L in MW-10 (3 µg/L)
- 2-chlorophenol at 23 µg/L in MW-15 (1 µg/L)
- 4-chloroaniline at 12 µg/L in OW-27A (5 µg/L)
- naphthalene at 27 µg/L in MW-10 (10 µg/L)

1.4 Remedial Objectives

The remedial objectives for groundwater as defined in the ROD (NYSDEC 2006) are to:

- prevent ingestion of groundwater with volatile organic compound (VOC) contaminant levels exceeding drinking water standards.
- prevent inhalation of VOCs from contaminated groundwater.
- treat the source of groundwater contamination.
- prevent the discharge of contaminants to the Hudson River.
- to the extent practicable, attain Class GA Ambient Water Quality Standards for contaminants of concern in groundwater.

1.5 Project Roles and Responsibilities

Mark Stella will serve as CEMC's Project Manager (PM) and will direct the technical and administrative aspects of the project. Mr. Stella will be the primary CEMC contact in connection with completing all work associated with the Groundwater Monitoring Plan.

The proposed ARCADIS personnel and their responsibilities are presented below:

- William T. McCune will serve as PM and will manage the technical and administrative aspects of the project. Mr. McCune will confirm that the proper resources are made available to complete all work associated with this Groundwater Monitoring Plan.

- Timothy E. Miller, P.E., will serve as the Project Officer and will provide direction, final review and internal approval of ARCADIS documents, detailed drawings and other work products developed throughout the project. Mr. Miller is a licensed Professional Engineer in New York State. Mr. Miller signed and sealed this Groundwater Monitoring Plan and will sign and seal the Final Engineering Report detailing the implementation of this Groundwater Monitoring Plan.

- The Field Manager will coordinate the implementation of this Groundwater Monitoring Plan and will also communicate proposed actions and schedules for implementation of RAs at the site to the NYSDEC. The field manager will be selected at the time of implementation.

- Mr. Greg Mason will serve as the Project Health and Safety Manager and will be responsible for the technical review and approval of the Health and Safety Plan (HASP), as well as ongoing review of project health and safety procedures implemented at the Site.

The following subcontractors will be retained during implementation of the Groundwater Monitoring Plan:

- TestAmerica Laboratories, Inc., a laboratory certified by the New York State Department of Health, will be retained by CEMC to provide off-site analytical services for water samples collected during implementation of this Groundwater Monitoring Plan.

- Waste Management, Inc. will be retained by CEMC to provide off-site transportation and treatment/disposal services for wastes generated during implementation of this Groundwater Monitoring Plan.

2. Groundwater Monitoring Activities

The groundwater monitoring program will include groundwater elevation and groundwater quality monitoring. Groundwater monitoring will be completed in two phases: Phase 1 will include groundwater monitoring to monitor the effectiveness of the remedial system and Phase 2 will include monitoring of the MNA remedy.

2.1 Groundwater Elevation Monitoring

Groundwater elevation monitoring will include a synoptic collection of groundwater elevation data from all on-site monitoring wells during each groundwater monitoring event. The groundwater elevation data will be used to generate potentiometric surface maps of the water table.

2.2 Groundwater Quality Monitoring

2.2.1 Phase 1 Groundwater Monitoring

Groundwater samples from existing monitoring wells were collected and analyzed to monitor the chlorobenzene plume during system operation and the extent of SVOCs, and to provide information for evaluation of MNA. The groundwater analytical data generated during the Phase 1 groundwater monitoring program will be used to determine when to shut down the remedial system.

Groundwater sampling locations are shown on Figure 2. Groundwater samples will be collected using low-flow sampling procedures as described in the ARCADIS SOP for groundwater sampling (Attachment A). Field parameters including dissolved oxygen, oxidation reduction potential, conductivity and pH will be measured during the collection of groundwater samples. Groundwater samples collected from all monitoring wells included in the program will be analyzed for VOCs. Monitoring wells with historical detections of SVOCs above applicable criteria and nearby downgradient monitoring wells will also be sampled for SVOCs. Select monitoring wells will be analyzed for general chemistry parameters including dissolved manganese and iron, alkalinity, and methane. Based on the results of the pilot studies, the site is not nutrient limited, so the analysis of nutrients in groundwater is has not been included in the groundwater monitoring plan. Groundwater elevation data will also be collected as part of the Phase I groundwater monitoring program.

Groundwater samples will be collected prior to the start up of the remedial system and then quarterly during the first 2 years of system operation and then semiannually until the system is shutdown. Additional monitoring of field parameters and groundwater elevations will be completed as part of the startup of the groundwater remedial system. If SVOCs are not detected at concentrations above NYSDEC groundwater quality standards and guidance values during the first year of monitoring, SVOCs will be removed from the groundwater monitoring program.

2.2.2 System Shutdown Groundwater Monitoring

The system shutdown groundwater monitoring will be completed in two phases: the complete system shutdown and if needed, based on the analytical results, a pulse shutdown phase. Unlike a typical pulsed cycle, the system will operate continuously during the first pulse for up to three months or until groundwater conditions approach pre-shutdown conditions, then the system will be shutdown and groundwater conditions will be monitored for three months. The system will be operated in a pulse cycle for up to three cycles before a contingency plan is evaluated. The pulse cycle of three months was selected to allow time for the microbial communities to respond to the increase in oxygen by increasing the degradation of chlorobenzene.

After the remedial system has been temporarily shut down, additional groundwater monitoring will be completed to determine if chlorobenzene concentrations are rebounding. For the first six months following the shut down, the Phase I groundwater monitoring will be completed quarterly and groundwater samples will be collected from source area monitoring wells OW-12W, MW-T2, and MW-12 on a monthly basis for analysis of VOCs. If a rebounding trend is not observed in the source area monitoring wells and no increasing trend is observed in the downgradient monitoring points, Phase 2 groundwater monitoring will be started. During the pulse system shutdown, groundwater samples will be collected from the source area monitoring wells OW-12W, MW-T2, and MW-12 every month for analysis of VOCs.

2.2.3 Phase 2 Groundwater Monitoring

After the remedial system has been shut down, it assumed that some low levels of chlorobenzene may remain in groundwater. Phase 2 groundwater monitoring will be used to monitor the natural attenuation of the remaining chlorobenzene plume. Monitoring wells located along the downgradient edge of the chlorobenzene plume and select monitoring wells in the source area will be monitored for VOCs and

monitored natural attenuation (MNA) parameters (carbon dioxide, alkalinity, methane and chloride). Groundwater sampling locations are shown on Figure 3. Field parameters including dissolved oxygen, oxidation reduction potential, conductivity and pH will be measured during the collection of groundwater samples. Groundwater elevation data will also be collected as part of the Phase 2 groundwater monitoring program. Groundwater samples will be collected using low-flow sampling procedures, as described in the ARCADIS SOP for groundwater sampling (Attachment A). The Phase 2 groundwater monitoring plan will be reviewed after the completion of Phase 1 and an annual basis and will be revised as needed base on the current groundwater conditions.

The results of the Phase 2 groundwater monitoring program will be analyzed to assess the effectiveness of natural attenuation. In addition to decreasing concentrations of dissolved chlorobenzene as an indicator of natural attention, parameters will be analyzed for indication of destruction of the dissolved chlorobenzene, as summarized below:

- Chloride concentrations will be monitored as an indicator of reductive dechlorination.
- Carbon dioxide will be monitored as an indicator of complete dechlorination.
- Alkalinity will be monitored as an indicator of biodegradation activities.
- Methane will be monitored as an indicator of degradation of organic matter.

Post-remedial MNA monitoring will be completed quarterly for the first year after the shutdown of the remedial system and then annually until the NYSDEC is adequately satisfied that the chlorobenzene plume is stable or shrinking and that no further actions are required. The determination that MNA will achieve the remedial goals for the site in a manner that is fully protective of all identified receptors, and that monitoring can be terminated, is to be made in accordance with applicable NYSDEC standards and protocols.

2.3 Reporting

ARCADIS will prepare quarterly reports during the first year of System operation and then an annual groundwater monitoring report for submittal to the NYSDEC for the remainder of the program. Groundwater analytical data will be provided to NYSDEC in the monthly reports. The monitoring reports will include current and historical groundwater analytical results and provide details on system operation and effectiveness and monitoring data will be submitted electronically in the NYSDEC electronic data deliverable (EDD) format.

3. Groundwater Monitoring Well Network

The groundwater monitoring network will be inspected annually for security and integrity. If a monitoring well is found to be damaged beyond repair or is no longer required for groundwater monitoring, it will be decommissioned.

3.1 Monitoring Well Decommissioning

Monitoring wells that are located in the area of the groundwater remediation trenches and system and monitoring wells that are not needed for groundwater monitoring will be decommissioned in accordance with NYSDEC Policy CP-43, including: AB-MW-4, AB-MW-5, OW-12S, OW-12N, OW-12E, MW-T6, LMS-1, and OW-18. Monitoring wells will be decommissioned by pulling the casing and grouting the borehole using a tremie pipe. If the monitoring well casing cannot be pulled from the borehole, the monitoring well will be grouted in place. When monitoring wells are no longer required for groundwater monitoring purposes, a request will be made to NYSDEC to allow decommissioning.

3.2 Monitoring Well Installation

Four additional monitoring wells (AMW-6, AMW-7, AMW-8, and AMW-9) and one replacement monitoring well (OW-5AR) will be installed to augment the existing monitoring network. The monitoring wells will be constructed using 2-inch-diameter, Schedule 40, machine-slotted polyvinyl chloride; and a 10-foot-long well screen, with approximately 3 feet of well screen above the water table.

During monitoring well installation, soil samples will be collected continuously for visual classification using split-spoon sampling methods or Geoprobe® methods from ground surface to the bottom of each boring. A photo ionization detector will be used to obtain headspace readings of each sample interval and to provide health and safety monitoring for field personnel during the drilling program. After installation of the monitoring well is complete, the monitoring well will be developed. The SOPs for monitoring well installation and monitoring well development are provided in Attachment A.

4. System Shutdown Criteria

Shutdown of the System will follow the NYSDEC Division of Environmental Remediation Technical Guidance for Site Investigation and Remediation (DER-10) and will be evaluated based on groundwater monitoring results (further in this section identify which groundwater monitoring locations will be used for determining system shutdown) collected during operation of the System. Shutdown of the System will be considered when it is determined that the Remedial Action Objectives (RAO) have been met, or that continued operation of the System is no longer effective and that a bulk reduction in contamination has been achieved by the System.

The objective of the System is to reduce the concentrations of dissolved chlorobenzene in the source areas through treatment to a level where natural attenuation processes alone would be an effective remedy. Data collected during the PDI indicated that chlorobenzene was fully degraded (mineralized) to CO_2 in downgradient monitoring wells OW-27A, ABMW-03, and MW-1A where concentrations of dissolved chlorobenzene in October 2009 ranged from 370 µg/L (ABMW-03) to 690 µg/L (OW-27A). Based on the observation that natural attenuation has been shown to be effectively reducing concentrations of chlorobenzene at the downgradient plume boundary, it is assumed that once concentrations of chlorobenzene in the source area are reduced below 1,000 parts per billion, natural attenuation alone would be an effective remedy.

It is anticipated that, prior to approaching asymptotic conditions, operation of the System will result in the reduction of the dissolved constituent concentrations such that natural attenuation alone would be an effective remedy. If concentrations of dissolved chlorobenzene in the monitoring points within the source areas (OW-12W, MW-T2, and MW-12) are observed to level off (approaching asymptotic conditions) subsequent to sustained operation of the System and optimization of the System to the extent possible, and concentrations in groundwater have been reduced to a level where natural attenuation processes can be relied upon to address residual constituents, shutdown of the System will be considered.

Continued operation of the System for a period of time prior to any proposed shutdown must confirm that asymptotic groundwater conditions have been achieved. Permanent shutdown of the System will begin with an initial System shutdown to monitor for chlorobenzene rebound in Site groundwater. After the initial shutdown, groundwater samples will be collect from the monitoring points within the source areas on a monthly basis to evaluate potential rebound of concentrations of

dissolved chlorobenzene for 6 months, with some flexibility to continue to monitor for a longer period of time to demonstrate a clear concentration trend to asymptotic conditions. The trending asymptotic concentration will then be compared to pre-shut down conditions and RAOs to make a determination if the System should continue to operate or if natural attenuation processes can be relied upon to address residual constituents.

The groundwater monitoring data will be graphically presented to illustrate the effectiveness of System operation. A minimum of eight approved groundwater data sets are typically necessary to statistically demonstrate within 95% confidence limits that asymptotic conditions have been reached. Alternative non-parametric statistical tests may be proposed.

If the post-shutdown groundwater data and concentrations are not observed to rebound substantially above the pre-shutdown concentrations, then the System can be considered to no longer be effecting contaminant concentration, and it may be appropriate for the NYSDEC to consider shutdown of the System. A decrease in contaminant levels in adjacent groundwater monitoring wells during shutdown may also be considered by the NYSDEC in justifying remedial System shutdown.

If the post system shutdown monitoring results indicate that a substantial rebound has occurred, the system will be turned back on and operated in a pulsed or other approved alternative cycle and the process will be monitored as previously discussed. Unlike a typical pulsed cycle, the system will operate continuously during the first pulse for up to three months or until groundwater conditions approach pre-shutdown conditions, then the system will be shutdown and groundwater conditions will be monitored for three months. The system will be operated in a pulse cycle for up to three cycles before a contingency plan is evaluated. The pulse cycle of three months was selected to allow time for the microbial communities to respond to the increase in oxygen by increasing the degradation of chlorobenzene.

The system treating groundwater will not be permanently shut down until the concentrations have been reduced and groundwater standards have been met at the site boundaries such that MNA will be initiated. The goal of the system is for contamination levels beyond the site boundaries will no longer be at levels which threaten public health and the environment. If the System has been operating for its anticipated duration and the RAOs have not been met following System optimization to improve System success, an evaluation of remedial alternatives will be performed

to meet RAOs, which will include the use of alternate injection locations, continued monitoring, or other appropriate alternatives.

Following active groundwater remediation, an MNA program will be initiated. The focus of this program will be to monitor the natural attenuation of remaining chlorobenzene concentrations in Site groundwater. This post-remedial monitoring will continue until the NYSDEC is adequately satisfied that the chlorobenzene plume is stable or shrinking and that no further actions are required. Groundwater monitoring methods will be used to determine the effect of natural attenuation.

It is anticipated that the System will remain intact, but inactive during the initial implementation of the MNA program in case further System operation is required. When it is determined that the System is no longer required, the System will be dismantled and removed from the Site. A deconstruction work plan and design, including proper abandonment of wells and piping per (CP43) will be developed when appropriate.

5. References

ARCADIS BBL, 2007. Pre-Design Groundwater Investigation Work Plan, Former Tappan Terminal Site, Hastings on Hudson, New York, November 2007.

New York State Department of Environmental Conservation. 1998. Technical and Operational Guidance Series 1.1.1. Ambient Water Quality Standards and Guidance Values and Groundwater Effluent Limitations. June 1998.

New York State Department of Environmental Conservation. 2006. Record of Decision Tappan Terminal Site Village of Hastings-on-Hudson, Westchester County, New York, 3-60-015. September 2006.

New York State Department of Environmental Conservation. 2009. CP-43: Groundwater Monitoring Well Decommissioning Policy

New York State Department of Environmental Conservation. 2010. DER-10 /Division of Environmental Remediation Technical Guidance for Site Investigation and Remediation.

Table

Table 1. Groundwater Sampling Summary, Former Tappan Terminal Site, Hastings on the Hudson, NY

Monitoring Well ID	VOCs	SVOCs + TICs*	Dissolved Iron	Dissolved Manganese	Alkalinity	Methane	Chloride
Phase I Monitoring							
AB-MW-2	X	X	X	X	X	X	
AB-MW-3	X	X	X	X	X	X	
MW-1A	X						
MW-1/TW4	X						
MW-6	X						
MW-7A	X						
MW-9A	X	X	X	X	X	X	
MW-10	X	X	X	X	X	X	
MW-12	X	X					
MW-15	X	X					
MW-D1	X						
MW-S1	X						
MW-T2	X						
OW-5AR	X						
OW-8	X	X	X	X	X	X	
OW-9A	X		X	X	X	X	
OW-12W	X	X	X	X	X	X	
AMW-6	X						
AMW-7	X						
AMW-8	X						
AMW-9	X						
Phase II Monitoring							
AB-MW-1	X		X	X	X	X	X
AB-MW-2	X		X	X	X	X	X
AB-MW-3	X		X	X	X	X	X
MW-1A	X						
MW-6	X		X	X	X	X	X
MW-7A	X		X	X	X	X	X
MW-9A	X		X	X	X	X	X
MW-10	X						
MW-12	X						
MW-D1	X						
MW-S1	X						
MW-T2	X						
OW-8	X		X	X	X	X	X
OW-9A	X		X	X	X	X	X
OW-12W	X		X	X	X	X	X
AMW-6	X						
AMW-7	X						
AMW-8	X						
AMW-9	X						

Notes:

*Tentatively Identified Compounds (TICs) are as follows: 0-chloraniline, 2-methyl-benzenamine, p-aminotoluene, 9,10-anthracenedione, 1,4-dihydroxy-9,10-anthracenedione, 1-hydroxy-9,10-anthracenedione, (z)-9-octadecenamine.

"X" - Groundwater sample location.

Figures

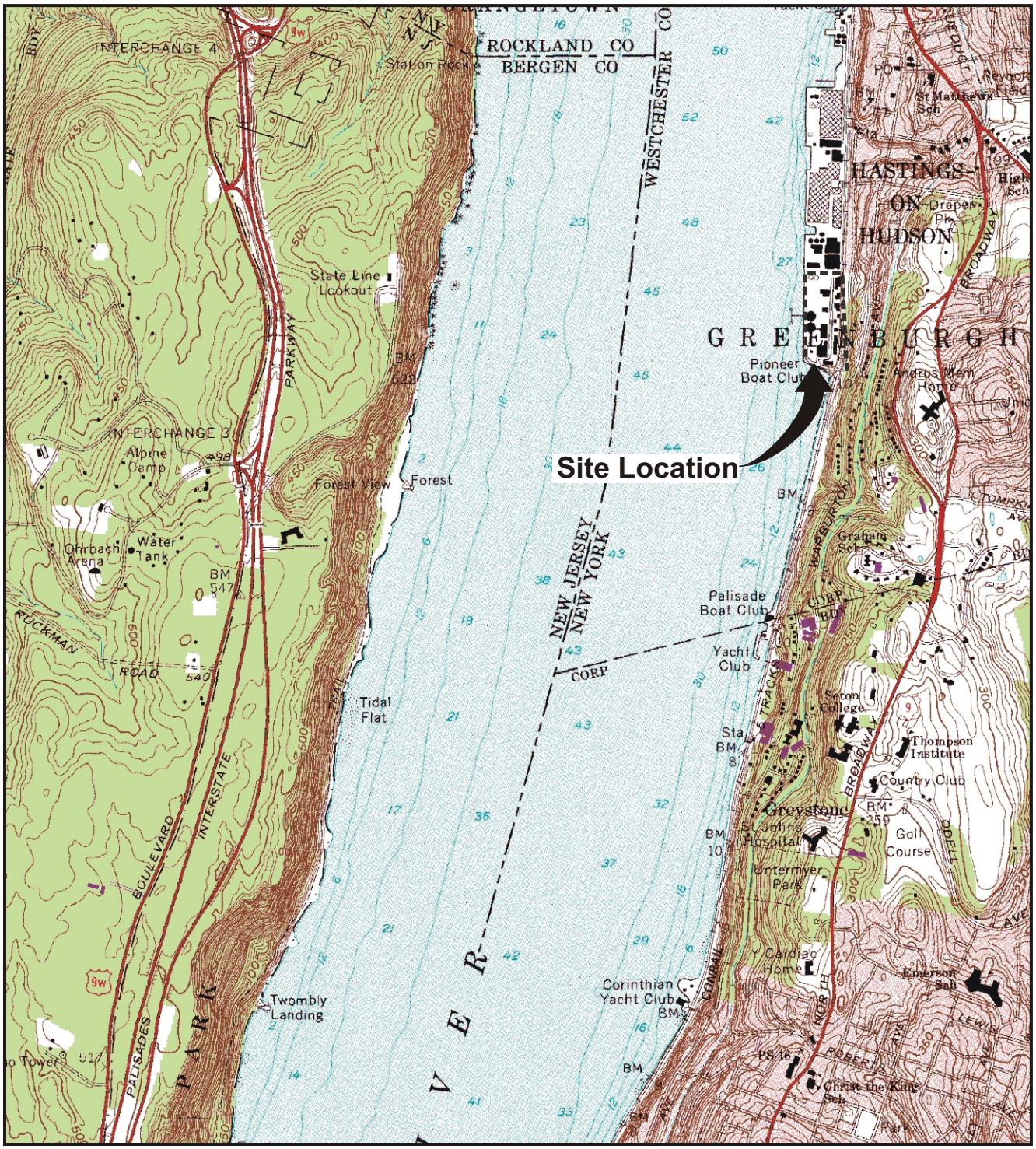

REFERENCE: BASE MAP USGS 7.5 MIN. QUAD., YONKERS, N.Y. - N.J., 1966, PHOTOREVISED 1979.

2000' 0 2000'

Approximate Scale: 1" = 2000'

Area Location

FORMER TAPPAN TERMINAL SITE
HASTINGS-ON-HUDSON, NEW YORK
GROUNDWATER MONITORING PLAN

SITE LOCATION MAP

ARCADIS

FIGURE
1

03/01/2011 SYRACUSE, NY-ENV/CAD-DHOWES
B0046918/0000/00006/CDR/46918N01.CDR

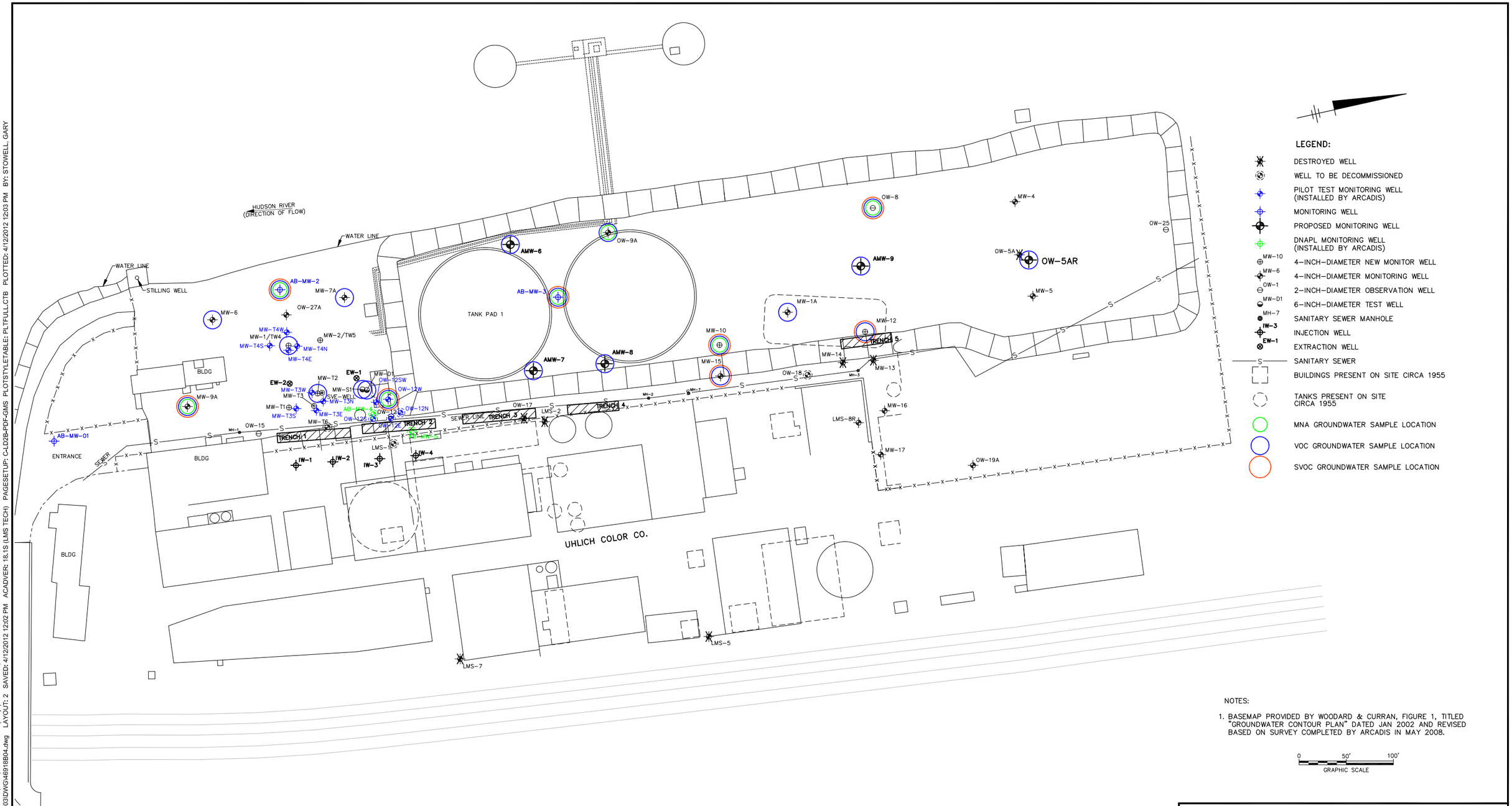

NOTES:

1. BASEMAP PROVIDED BY WOODARD & CURRAN, FIGURE 1, TITLED "GROUNDWATER CONTOUR PLAN" DATED JAN 2002 AND REVISED BASED ON SURVEY COMPLETED BY ARCADIS IN MAY 2008.

0 50' 100'
GRAPHIC SCALE

FORMER TAPPAN TERMINAL SITE
HASTINGS ON HUDSON, NEW YORK
MONITORING PLAN

GROUNDWATER MONITORING LOCATIONS PHASE I

ARCADIS

FIGURE
2

CITY: SYRACUSE DIV/GROUP: ENV/CAD DB: GMS, KFS, R.ALLEN PM:(Reqd) LYR: ON=*;OFF=*REF PAGESETUP: C-LD2B-PDF-GMS PLOTSTYLETABLE: PLTFULL.CTB PLOTTED: 4/12/2012 12:03 PM BY: STOWELL, GARY
G:\ENVCAD\SYRACUSE\ACT\B0046918\0001\00003\DWG\46918B04.dwg LAYOUT: 2 SAVED: 4/12/2012 12:02 PM ACADVER: 18.1S (LMS TECH)
XREFS: 46918X01 46918X00 IMAGES: PROJECTNAME: ---/

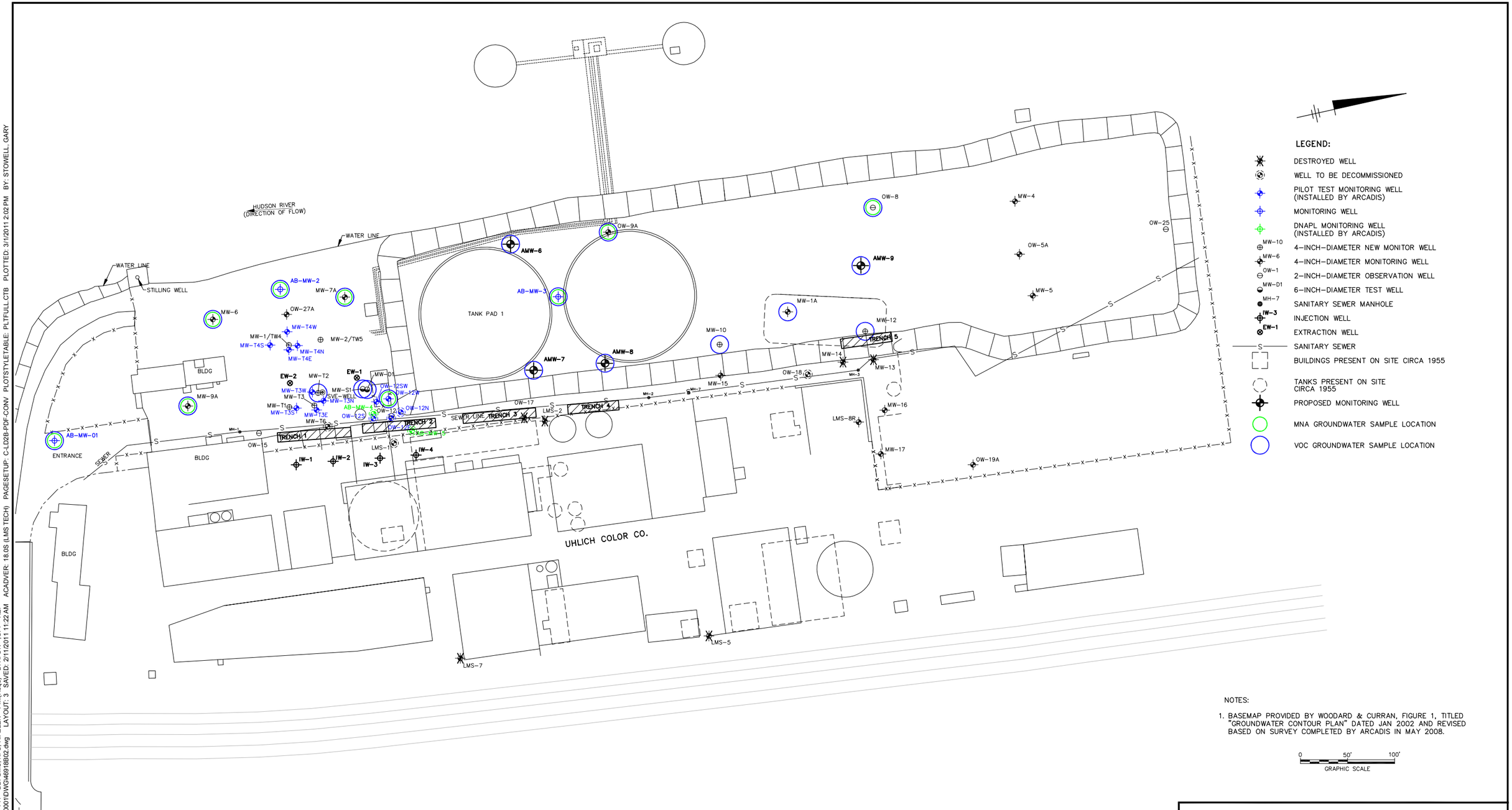

LEGEND:

- DESTROYED WELL
- WELL TO BE DECOMMISSIONED
- PILOT TEST MONITORING WELL (INSTALLED BY ARCADIS)
- MONITORING WELL
- DNAPL MONITORING WELL (INSTALLED BY ARCADIS)
- MW-10 4-INCH-DIAMETER NEW MONITOR WELL
- MW-6 4-INCH-DIAMETER MONITORING WELL
- OW-1 2-INCH-DIAMETER OBSERVATION WELL
- MW-D1 6-INCH-DIAMETER TEST WELL
- MH-7 SANITARY SEWER MANHOLE
- IW-3 INJECTION WELL
- EW-1 EXTRACTION WELL
- S SANITARY SEWER
- BUILDINGS PRESENT ON SITE CIRCA 1955
- TANKS PRESENT ON SITE CIRCA 1955
- PROPOSED MONITORING WELL
- MNA GROUNDWATER SAMPLE LOCATION
- VOC GROUNDWATER SAMPLE LOCATION

NOTES:

1. BASEMAP PROVIDED BY WOODARD & CURRAN, FIGURE 1, TITLED "GROUNDWATER CONTOUR PLAN" DATED JAN 2002 AND REVISED BASED ON SURVEY COMPLETED BY ARCADIS IN MAY 2008.

0 50' 100'
GRAPHIC SCALE

FORMER TAPPAN TERMINAL SITE
HASTINGS ON HUDSON, NEW YORK
MONITORING PLAN

GROUNDWATER MONITORING LOCATIONS PHASE II

ARCADIS

FIGURE
3

CITY: SYRACUSE, N.Y. DIV/GROUP: ENVCAD-141 DB: GMS, KFS, R.ALLEN PM:(Reqd) LYR: ON="OFF="REF PAGESETUP: C-LD2B-PDF-CONV PLOTSTYLETABLE: PLTFULL.CTB PLOTTED: 3/1/2011 2:02 PM BY: STOWELL, GARY
G:\ENVCAD\SYRACUSE\ACT\B0046918\0000\00001\DWG\46918B02.dwg LAYOUT: 3 SAVED: 2/11/2011 11:22 AM ACADVER: 18.0S (LMS TECH)
XREFS: 46918X01 46918X00 IMAGES: PROJECTNAME: ---

Attachment A

ARCADIS SOPs

Standard Operating Procedure: Monitoring Well Installation

I. Scope and Application

Monitoring well boreholes are typically drilled using the hollow-stem auger drilling method. Other drilling methods that are also suitable for installing overburden monitoring wells, and are sometimes necessary due to site-specific geologic conditions, include: drive-and-wash, spun casing, Rotasonic, dual-rotary (Barber Rig), and fluid/mud rotary. Direct-push techniques (e.g., Geoprobe or cone penetrometer) and driven well points may also be used in some cases. The drilling method to be used at a given site will be selected based on site-specific consideration of anticipated drilling/well depths, site or regional geologic knowledge, type of monitoring to be conducted using the installed well, and cost.

No oils or grease will be used on equipment introduced into the boring (e.g., drill rod, casing, or sampling tools). No coated bentonite pellets will be used in the well drilling or construction process. Material safety data sheets (MSDS) and specifications of materials to be installed in the well will be obtained prior to mobilizing onsite, including:

- well casing;
- bentonite;
- sand; and
- grout.

Well materials will be inspected and, if needed, cleaned prior to installation.

II. Personnel Qualifications

Monitoring well installation activities will be performed by persons who have been trained in proper well installation procedures under the guidance of an experienced field geologist, engineer, or technician. Where field sampling is performed for soil characterization, field personnel will have undergone in-field training in terms of soil classification.

III. Equipment List

The following materials will be available during soil boring and monitoring well installation activities, as required:

- Site Plan with proposed soil boring/well locations;
- Work Plan or *Field Sampling Plan* (FSP), and site *Health and Safety Plan* (HASP);
- personal protective equipment (PPE), as required by the HASP;
- drilling equipment required by the American Society of Testing and Materials (ASTM) D 1586, when performing split-spoon sampling;
- disposable plastic liners, when drilling with direct-push equipment;
- appropriate soil sampling equipment (e.g., stainless steel spatulas, knife);
- equipment cleaning materials;
- appropriate sample containers and labels;
- chain-of-custody forms;
- insulated coolers with ice, when collecting samples requiring preservation by chilling;
- photoionization detector (PID) or flame ionization detector (FID);
- keys to wells;

- well construction materials; and
- field notebook.

IV. Cautions

Prior to beginning field work, underground utilities in the vicinity of the drilling areas will be delineated by the drilling contractor or an independent underground utility locator service. See separate SOP for utility clearance.

No coated bentonite pellets will be used in monitoring well construction, as the coating could contaminate the well. Overburden monitoring wells may be installed with Schedule 40 polyvinyl chloride (PVC) to a maximum depth of 200 feet below ground surface (bgs). PVC monitoring wells between 200 and 400 feet total depth will be constructed using Schedule 80 PVC. Monitoring wells deeper than 400 feet will be constructed using steel.

V. Health and Safety Considerations

Field activities associated with monitoring well installation will be performed in accordance with a site-specific HASP, a copy of which will be present on site during such activities.

VI. Procedures

The procedures for installing groundwater monitoring wells in soil are presented below:

Hollow-Stem Auger, Drive-and-Wash, Spun Casing, Fluid/Mud Rotary, Rotasonic, and Dual-Rotary Drilling Methods

1. Locate boring/well location, establish work zone, and set up sampling equipment cleaning area.

2. Advance soil boring to depth. Collect soil samples at appropriate interval as specified in the Work Plan and/or FSP. Collect, document, and store samples for laboratory analysis as specified in the Work Plan and/or FSP. A common sampling method that produces high-quality samples with relatively little soil disturbance is the ASTM D 1586 - *Standard Test Method for Penetration Test and Split-Barrel Sampling of Soils.* Split-spoon samples are obtained during drilling using hollow-stem auger, drive-and-wash, spun casing, and fluid/mud rotary. Rotasonic drilling produces large-diameter soil cores that tend to be more disturbed than split-spoon samples due to the vibratory action of the drill casing. Dual-rotary removes cuttings by compressed air and allows only a general assessment of geology.

3. Describe each soil sample, including soil type; color; percent recovery; relative moisture content; soil texture; grain-size and shape; consistency; presence of any staining, sheen, or odor; and any other pertinent observations. Record descriptions in the field notebook. During soil boring advancement, document all drilling events in field notebook, including blow counts (number of blows required to advance split-spoon sampler in 6-inch increments) and work stoppages. Blow counts will not be available if Rotasonic, dual-rotary, or direct-push methods are used.

4. Upon completing the borehole to the desired depth, install the monitoring well by lowering the screen and casing assembly with sump through the augers or drill casing. Monitoring wells typically will be constructed of 2-inch-diameter, flush-threaded PVC slotted well screen and blank riser casing. Smaller diameters may be used if wells are installed using direct-push methodology or if multiple wells are to be installed in a single borehole. The screen length will be specified in the Work Plan or FSP based on regulatory requirements and specific monitoring objectives. Monitoring well screens are usually 5 to 10 feet long, but may be up to 25 feet long in very low permeability, thick geologic formations. The screen length will depend on the purpose for the well and the objectives of the groundwater investigation. Typically, the slot size will be 0.010 inch and the sand pack will be Morie No. 0 or equivalent. In very fine-grained formations where sample turbidity needs to be minimized, it may be preferred to use a 0.006-inch slot size and Morie No. 00 or equivalent sand pack. Alternatively, where monitoring wells are installed in coarse-grained deposits and

higher well yield is required, a 0.020-inch slot size and Morie No. 1 or equivalent sand pack may be preferred. To the extent practicable, the slot size and sand pack gradation will be predetermined in the Work Plan or FSP based on site-specific grain-size analysis or other geologic considerations or monitoring objectives. A blank sump may be attached below the well screen if the well is being installed for dense non-aqueous phase liquid (DNAPL) recovery/monitoring purposes. If so, the annular space around the sump will be backfilled with neat cement grout to the bottom of the well screen prior to placing the sand pack around the screen. This grout will be allowed to harden for a minimum 12 hour, and preferably 24 hour, period before placing sand pack. A blank riser will extend from the top of the screen to approximately 2.5 feet above grade or, if necessary, just below grade where conditions warrant a flush-mounted monitoring well.

5. When the monitoring well assembly has been set in place and the grout has been placed around the sump (if any), place a washed silica sand pack in the annular space from the bottom of the boring to a height of 1 to 2 feet above the top of the well screen. The sand pack is placed and drilling equipment extracted in increments until the top of the sand pack is at the appropriate depth. The sand pack will be consistent with the screen slot size and the soil particle size in the screened interval, as specified in the Work Plan or FSP. A hydrated bentonite seal (a minimum of 2 feet thick) will then be placed in the annular space above the sand pack. If non-hydrated bentonite is used, the bentonite should be permitted to hydrate in place for a minimum of 30 minutes before proceeding. No coated bentonite pellets will be used in monitoring well drilling or construction. Potable water may be added to hydrate the bentonite if the seal is above the water table. Monitor the placement of the sand pack and bentonite with a weighted tape measure. During the extraction of the augers or casing, a cement/bentonite grout will be placed in the annular space from the bentonite seal to a depth approximately 2 feet bgs.

6. Place a locking, steel protective casing (extended at least 1.5 feet below grade and 2 feet above grade) over the riser casing and secure with a neat Portland Cement seal. Alternatively, for flush-mount completions, place a steel curb box with a bolt-down lid over the riser casing and secure with a neat Portland Cement seal. In either case, the cement seal will extend approximately 1.5 to 2.0 feet below grade and laterally at least 1 foot in all directions from the protective casing, and should slope gently away to promote drainage away from the well. Monitoring wells will be labeled with the appropriate designation on both the inner and outer well casings or inside of the curb box lid.

   When an above-grade completion is used, the PVC riser will be sealed using an expandable locking plug and the top of the well will be vented by drilling a small-diameter (1/8 inch) hole near the top of the well casing or through the locking plug, or by cutting a vertical slot in the top of the well casing. When a flush-mount installation is used, the PVC riser will be sealed using an unvented, expandable locking plug.

7. During well installation, record construction details and actual measurements relayed by the drilling contractor and tabulate materials used (e.g., screen and riser footages; bags of bentonite, cement, and sand) in the field notebook.

8. After completing the well installation, lock the well, clean the area, and dispose of materials in accordance with the procedures outlined in Section VII below.

Direct-Push Method

The direct-push drilling method may also be used to complete soil borings and monitoring wells. Examples of this technique include the Diedrich ESP vibratory probe system or AMS Power Probe® dual-tube system. Environmental probe systems typically use a hydraulically operated percussion hammer. Depending on the equipment used, the hammer delivers 140- to 350-foot pounds of energy with each blow. The hammer provides the force needed to penetrate very stiff/medium dense soil formations. The hammer simultaneously advances an outer steel casing that contains a dual-tube liner for sampling soil. The outside diameter (OD) of the outer casing ranges from 1.75 to 2.4 inches and the OD of the inner sampling tube ranges from 1.1 to 1.8 inches. The outer casing isolates shallow layers and permits the unit to continue to probe at depth. The double-rod system provides a borehole that may be tremie-grouted from the bottom up. Alternatively, the inside diameter (ID) of

the steel casing provides clearance for the installation of small-diameter (e.g., 0.75- to 1-inch ID) micro-wells. The procedures for installing monitoring wells in soil using the direct-push method are described below.

1. Locate boring/well location, establish work zone, and set up sample equipment cleaning area.

2. Advance soil boring to designated depth, collecting samples at intervals specified in the Work Plan. Samples will be collected using dedicated, disposable, plastic liners. Describe samples in accordance with the procedures outlined in Step 2 above. Collect samples for laboratory analysis as specified in the Work Plan and/or FSP.

3. Upon advancing the borehole to the desired depth, install the micro-well through the inner drill casing. The micro-well will consist of approximately 1-inch ID PVC slotted screen and blank riser. The sand pack, bentonite seal, and cement/bentonite grout will be installed as described, where applicable, in Step 4 above.

4. Install protective steel casing or flush-mount, as appropriate, as described in Step 5 above. During well installation, record construction details and tabulate materials used.

5. After completing the well installation, lock the well, clean the area, and dispose of materials in accordance with the procedures outlined in Section VII below.

Driven Well Point Installation

Well points will be installed by pushing or driving using a drilling rig or direct-push rig, or hand-driven where possible. The well point construction materials will consist of a 1- to 2-inch-diameter threaded steel casing with either 0.010- or 0.020-inch slotted stainless steel screen. The screen length will vary depending on the hydrogeologic conditions of the site. The casings will be joined together with threaded couplings and the terminal end will consist of a steel well point. Because they are driven or pushed to the desired depth, well points do not have annular backfill materials such as sand pack or grout.

VII. Waste Management

Investigation-derived wastes, including soil cuttings and excess drilling fluids (if used), decontamination liquids, and disposable materials (well material packages, PPE, etc.), will be placed in clearly labeled, appropriate containers, or managed as otherwise specified in the Work Plan or FSP.

VIII. Data Recording and Management

Drilling activities will be documented in a proper field notebook. Pertinent information will include personnel present on site, times of arrival and departure, significant weather conditions, timing of well installation activities, soil descriptions, well construction specifications (screen and riser material and diameter, sump length, screen length and slot size, riser length, sand pack type), and quantities of materials used.

A field survey control program will be conducted using standard instrument survey techniques to document well or piezometer location, ground, and inner and outer casing elevations. Generally, a local baseline control will be set up. This local baseline control can then be tied into the appropriate vertical and horizontal datum, such as the National Geodetic Vertical Datum of 1929 and the State Plane Coordinate System. At a minimum, the elevation of the top of the inner casing used for water-level measurements should be measured to the nearest 0.01 foot. Elevations will be established in relation to the National Geodetic Vertical Datum of 1929. A permanent mark will be placed on top of the inner casing to mark the point for water-level measurements.

IX. Quality Assurance

All drilling equipment and associated tools (including augers, drill rods, sampling equipment, wrenches, and any other equipment or tools) that may have come in contact with soil will be cleaned in accordance with the

procedures outlined in the Field Equipment Cleaning-Decontamination SOP. Well materials will also be cleaned prior to well installation.

X. References

American Society of Testing and Materials (ASTM) D 1586 - *Standard Test Method for Penetration Test and Split-Barrel Sampling of Soils.*

Standard Operating Procedure: Monitoring Well Development

I. Scope and Application

Monitoring wells (or piezometers, well points, or micro-wells) will be developed to clear them of fine-grained sediment and any drilling fluids that may have been used during well installation, and enhance the hydraulic connection between the well and the surrounding geologic formation. Development will be accomplished by evacuating well water by either pumping or bailing. Prior to pumping or bailing, the screened interval will be gently surged using a surge block, bailer, or inertial pump with surge-block fitting. In addition, sediment accumulated in the bottom of the well will be removed by bailing with a bottom-loading bailer.

Pumping methods will be selected based on site-specific geologic conditions, anticipated well yield, water table depth, and groundwater monitoring objectives, and may include one or more of the following:

- submersible pump;
- inertial pump (Waterra™ pump);
- bladder pump;
- peristaltic pump; and
- centrifugal pump.

When developing a well using the pumping method, the pump (or, with inertial pumps, the tubing) is lowered to the screened portion of the well. During purging, the pump or tubing will be moved up and down the screened interval until the well yields relatively clear water.

Submersible pumps have a motor-driven impeller that pushes the water discharge tubing to the ground surface. Inertial pumps have a check valve at the bottom of stiff tubing which, when operated up and down, lifts water to the ground surface. Bladder pumps have a bottom check valve and a flexible internal bladder that fills from below and is then compressed using pressurized air to force water out the top of the bladder through the discharge tubing to the ground surface. These three types of pumps have a wide range of applicability in terms of well depth and water depth. Centrifugal and peristaltic pumps use atmospheric pressure to lift water from the well, and therefore can only be practically used where the depth to water is less than 25 feet.

II. Personnel Qualifications

Monitoring well development activities will be performed by persons who have been trained in proper well development procedures under the guidance of an experienced field geologist, engineer, or technician.

III. Equipment List

Materials for monitoring well development using a pump include:

- health and safety equipment, as required by the site Health and Safety Plan (HASP);
- cleaning equipment;
- photoionization detector (PID) to measure headspace vapors;
- pump;
- polyethylene pump discharge tubing;
- plastic sheeting;
- power source (generator or battery);
- field notebook;
- graduated pails;

- appropriate containers; and
- monitoring well keys.

Materials for monitoring well development using a bailer include:

- personal protective equipment (PPE) as required by the HASP;
- cleaning equipment;
- PID to measure headspace vapors;
- bottom-loading bailer, sand bailer;
- polypropylene or nylon rope;
- plastic sheeting;
- graduated pails;
- appropriate containers; and
- keys to wells.

IV. Cautions

Where surging is performed to assist in removing fine-grained material from the sand pack, surging must be performed in a gentle manner. Excessive suction could promote fine-grained sediment entry into the outside of the sand pack from the formation.

V. Health and Safety Considerations

Field activities associated with monitoring well development will be performed in accordance with a site-specific HASP, a copy of which will be present on site during such activities.

VI. Procedure

1. The procedures for monitoring well development are described below. (Note: Steps 6, 7, and 9 can be performed contemporaneously using an inertial pump with a surge-block fitting.)

2. Don appropriate PPE (as required by the HASP).

3. Place plastic sheeting around the well.

4. Clean all equipment entering each monitoring well, except for new, disposable materials that have not been previously used.

5. Open the well cover while standing upwind of the well, remove well cap. Insert PID probe approximately 4 to 6 inches into the casing or the well headspace and cover with gloved hand. Record the PID reading in the field notebook. If the well headspace reading is less than 5 PID units, proceed; if the headspace reading is greater than 5 PID units, screen the air within the breathing zone. If the PID reading in the breathing zone is below 5 PID units, proceed. If the PID reading is above 5 PID units, move upwind from well for 5 minutes to allow the volatiles to dissipate. Repeat the breathing zone test. If the reading is still above 5 PID units, don the appropriate respiratory protection in accordance with the requirements of the HASP. Record all PID readings.

6. Obtain an initial measurement of the depth-to-water and the total well depth from the reference point at the top of the well casing.

7. Lower a surge block or bailer into the screened portion of the well. Gently raise and lower the surge block or bailer within the screened interval of the well to force water in and out of the screen slots and sand pack.

Continue surging for 15 to 30 minutes. Note that this step is optional but recommended for all new wells/piezometers, particularly in formations with a relatively high content of fine-grained material.

8. Lower a bottom-loading bailer to the bottom of the well and gently bounce the bailer on the bottom of the well to collect accumulated sediment, if any. Remove and empty the bailer. Repeat until the bailed water is free of excessive sediment and the bottom of the well feels solid.

9. After surging the well and removing excess accumulated sediment from the bottom of the well, re-measure the depth-to-water and the total well depth from the reference point at the top of the well casing.

10. Remove formation water by pumping or bailing. Where pumping is used, measure and record the pre-pumping water level. Operate the pump at a relatively constant rate. Measure the pumping rate using a calibrated container and stop watch. Measure and record the water level in the well at least once every 5 minutes during pumping. Note any relevant observations in terms of water color, visual level of turbidity, sheen, odors, etc. Pump or bail for 30 to 60 minutes or until termination criteria specified in the Work Plan or Field Sampling Plan (FSP) are reached. Record the total volume of water purged from the well.

11. If the well goes dry, stop pumping or bailing and allow well to recover. Resume pumping or bailing when sufficient water has recharged the well.

12. Contain all water in appropriate containers.

13. When complete, secure the lid back on the well.

14. Place disposable materials in plastic bags for appropriate disposal and decontaminate reusable, downhole pump components and/or bailer.

VII. Waste Management

Materials generated during monitoring well installation and development will be placed in appropriate containers. Containerized waste will be disposed of by the client.

VIII. Data Recording and Management

Well development activities will be documented in a proper field notebook. Pertinent information will include personnel present on site; times of arrival and departure; significant weather conditions; timing of well development activities; development method(s); observations of purge water color, turbidity, odor, sheen, etc.; purge rate; and water levels before and during pumping.

IX. Quality Assurance

All reused, non-disposable, downhole well development equipment will be cleaned in accordance with the procedures outlined in the Field Equipment Cleaning-Decontamination SOP.

X. References

Not Applicable.

Standard Operating Procedure: Low-Flow Groundwater Purging and Sampling Procedures for Monitoring Wells

I. Scope and Application

Groundwater samples will be collected from monitoring wells to evaluate groundwater quality. The protocol presented in this standard operating procedure (SOP) describes the procedures to be used to purge monitoring wells and collect groundwater samples. This protocol has been developed in accordance with the United States Environmental Protection Agency (USEPA) Region I Low Stress (Low Flow) Purging and Sampling Procedures for the Collection of Groundwater Samples from Monitoring Wells (USEPA SOP No. GW0001; July 30, 1996). Both filtered and unfiltered groundwater samples may be collected using this low-flow sampling method. Filtered samples will be obtained using a 0.45-micron disposable filter. No wells will be sampled until well development has been performed in accordance with the procedures presented in the SOP titled Monitoring Well Development, unless that well has been sampled or developed within the prior 1-year time period. Groundwater samples will not be collected within 1 week following well development.

II. Personnel Qualifications

Low-flow groundwater purging and sampling activities will be performed by persons who have been trained in proper well sampling procedures under the guidance of an experienced field geologist, engineer, or technician. Field personnel will have undergone in-field training in terms of sampling procedures.

III. Equipment List

Specific to this activity, the following materials (or equivalent) will be available:

- Health and safety equipment (as required in the site Health and Safety Plan [HASP]).
- Site Plan, well construction records, prior groundwater sampling records (if available).
- Sampling pump, which may consist of one or more of the following:
  - submersible pump (e.g., Grundfos Redi-Flo 2);
  - peristaltic pump (e.g., ISCO Model 150); and/or
  - bladder pump (e.g., Marschalk System 1).
- Teflon® tubing or polyethylene tubing of an appropriate size for the pump being used. For peristaltic pumps, dedicated Tygon® tubing (or other type as specified by the manufacturer) will also be used through the pump apparatus.
- Water-level probe (e.g., Solinst Model 101).
- Water-quality (temperature/pH/specific conductivity/ORP/turbidity/dissolved oxygen) meter and flow-through measurement cell. Several brands may be used, including:
  - YSI 6-Series Multi-Parameter Instrument;
  - Hydrolab Series 3 or Series 4a Multiprobe and Display; and/or

- Supplemental turbidity meter (e.g., Horiba U-10 or Hach 2100P). Turbidity measurements collected with multi-parameter meters have been shown to sometimes be unreliable due to fouling of the optic lens of the turbidity meter within the flow-through cell. A supplemental turbidity meter will be used to verify turbidity data during purging if such fouling is suspected. Note that industry improvements may eliminate the need for these supplemental measurements in the future.
- Appropriate water sample containers (supplied by the laboratory).
- Appropriate blanks (trip blank supplied by the laboratory).
- 0.45-micron disposable filters.
- Large glass mixing container.
- Teflon® stirring rod.
- Cleaning equipment.
- Groundwater sampling log (attached) or bound field logbook.

Note that in the future, the client may acquire different makes/models of some of this equipment if the listed makes/models are no longer available, or as a result of general upgrades or additional equipment acquisitions. In the event that the client uses a different make/model of the equipment listed, the client will use an equivalent type of equipment (e.g., pumps, flow-through analytical cells) and note the specific make/model of the equipment used during a sampling event on the groundwater sampling log. In addition, should the client desire to change to a markedly different sampling methodology (e.g., discrete interval samplers, passive diffusion bags, or a yet to be developed technique), the client will submit a proposed SOP for the new methodology for USEPA approval prior to implementing such a change.

The maintenance requirements for the above equipment generally involve decontamination or periodic cleaning, battery charging, and proper storage, as specified by the manufacturer. For operational difficulties, the equipment will be serviced by a qualified technician.

IV. Cautions

If heavy precipitation occurs and no cover over the sampling area and monitoring well can be erected, sampling must be discontinued until adequate cover is provided. Rain water could contaminate groundwater samples.

Do not use permanent marker or felt-tip pens for labels on sample container or sample coolers – use indelible ink. The permanent markers could introduce volatile constituents into the samples.

It may be necessary to field filter some parameters (e.g., metals) prior to collection, depending on preservation, analytical method, and project quality objectives.

Check monitoring well logs for use of bentonite pellets. Make note of potential use of bentonite pellets on the groundwater sampling log. Coated bentonite pellets have been found to contaminate monitoring wells.

Store and/or stage empty and full sample containers and coolers out of direct sunlight.

To mitigate potential cross-contamination, groundwater samples are to be collected in a pre-determined order from least impacted to impacted based on previous analytical data. If no analytical data are available, samples are collected in order of upgradient, then furthest downgradient to source area locations.

Be careful not to over-tighten lids with Teflon liners or septa (e.g., 40 mL vials). Over-tightening can impair the integrity of the seal.

V. Health and Safety Considerations

Field activities associated with groundwater purging and sampling will be performed in accordance with a site-specific HASP, a copy of which will be present on site during such activities. If thunder or lighting is present, discontinue sampling until 30 minutes have passed after the last occurrence of thunder or lighting.

VI. Procedure

Groundwater will be purged from the wells using an appropriate pump. Peristaltic pumps will initially be used to purge and sample all wells. If the depth to water is below the sampling range of a peristaltic pump (approximately 25 feet), submersible pumps or bladder pumps will be used provided the well is constructed with a casing diameter greater than or equal to 2 inches (the minimum well diameter capable of accommodating such pumps). For smaller diameter wells where the depth to water is below the sampling range of a peristaltic pump, alternative sampling methods (i.e., bailing) will be used to purge and sample the groundwater. Purge water will be collected and containerized.

1. Calibrate field instruments according to procedures for calibration.

2. Measure initial depth to groundwater prior to placement of pumps. If a submersible or bladder pump is being used, slowly lower pump, safety cable, tubing, and electrical lines into the well to a depth corresponding to the approximate center of the saturated screen section of the well. If a peristaltic pump is being used, slowly lower the sampling tubing into the well to a depth corresponding to the approximate center of the saturated screen section of the well. The pump intake or sampling tube must be kept at least 2 feet above the bottom of the well to prevent mobilization of any sediment present in the bottom of the well.

3. Measure the water level again with the pump in the well before starting the pump. Start pumping the well at 200 to 500 milliliters (mL) per minute. The pump rate should be adjusted to cause little or no water level drawdown in the well (less than 0.3 feet below the initial static depth to water measurement) and the water level should stabilize. The water level should be monitored every 3 to 5 minutes (or as appropriate) during pumping if the well diameter is of sufficient size to allow such monitoring. Care should be taken not to break pump suction or cause entrainment of air in the sample. Record pumping rate adjustments and depths to water. If necessary, pumping rates should be reduced to the minimum capabilities of the pump to avoid pumping the well dry and/or to stabilize indicator parameters. A steady flow rate should be maintained to the extent practicable. Groundwater sampling records from previous sampling events (if available) should be examined to estimate the optimum pumping rate and anticipated drawdown for the well in order to more efficiently reach a stabilized pumping condition.

   If the recharge rate of the well is very low, alternative purging techniques should be used, which will vary based on the well construction and screen position. For wells screened across the water table, the well should be pumped dry and sampling should commence as soon as the volume in the well has recovered sufficiently to permit collection of samples. For wells screened entirely below the water table, the well should be pumped until a stabilized level (which may be below the maximum displacement goal of 0.3 feet) can be maintained and monitoring for stabilization of field indicator parameters can commence. If a lower stabilization level cannot be maintained, the well should be pumped until the drawdown is at a level slightly higher than the bentonite seal above the well screen. Sampling should commence after one well volume has been removed and the well has recovered sufficiently to permit collection of samples.

   During purging, monitor the field indicator parameters (e.g., turbidity, temperature, specific conductance, pH, etc.) every 3 to 5 minutes (or as appropriate). Field indicator parameters will be measured using a flow-through analytical cell or a clean container such as a glass beaker. Record field indicator parameters

on the groundwater sampling log. The well is considered stabilized and ready for sample collection when turbidity values remain within 10% (or within 1 NTU if the turbidity reading is less than 10 NTU), the specific conductance and temperature values remain within 3%, and pH remains within 0.1 units for three consecutive readings collected at 3- to 5-minute intervals. If the field indicator parameters do not stabilize within 1 hour of the start of purging, but the groundwater turbidity is below the goal of 50 NTU and the values for all other parameters are within 10%, the well can be sampled. If the parameters have stabilized but the turbidity is not in the range of the 50 NTU goal, the pump flow rate should be decreased to a minimum rate of 100 mL/min to reduce turbidity levels as low as possible. If dissolved oxygen values are not within acceptable range for the temperature of groundwater (Attachment 1), then check for and remove air bubbles on probe or in tubing.

During extreme weather conditions, stabilization of field indicator parameters may be difficult to obtain. Modifications to the sampling procedures to alleviate these conditions (e.g., measuring the water temperature in the well adjacent to the pump intake) will be documented in the field notes. If other field conditions exist that preclude stabilization of certain parameters, an explanation of why the parameters did not stabilize will also be documented in the field logbook.

4. Complete the sample label and cover the label with clear packing tape to secure the label onto the container.

5. After the indicator parameters have stabilized, collect groundwater samples by diverting flow out of the unfiltered discharge tubing into the appropriate labeled sample container. If a flow-through analytical cell is being used to measure field parameters, the flow-through cell should be disconnected after stabilization of the field indicator parameters and prior to groundwater sample collection. Under no circumstances should analytical samples be collected from the discharge of the flow-through cell. When the container is full, tightly screw on the cap. Samples should be collected in the following order: VOCs, TOC, SVOCs, metals and cyanide, and others.

6. If sampling for total and filtered metals and/or PCBs, a filtered and unfiltered sample will be collected. Install an in-line, disposable 0.45-micron particle filter on the discharge tubing after the appropriate unfiltered groundwater sample has been collected. Continue to run the pump until an initial volume of "flush" water has been run through the filter in accordance with the manufacturer's directions (generally 100 to 300 mL). Collect filtered groundwater sample by diverting flow out of the filter into the appropriately labeled sample container. When the container is full, tightly screw on the cap.

7. Secure with packing material and store at 4°C in an insulated transport container provided by the laboratory.

8. Record on the groundwater sampling log or bound field logbook the time sampling procedures were completed, any pertinent observations of the sample (e.g., physical appearance, and the presence or lack of odors or sheens), and the values of the stabilized field indicator parameters as measured during the final reading during purging.

9. Remove pump and tubing from well, secure well, properly dispose of personal protective equipment (PPE) and disposable equipment.

10. If tubing is to be dedicated to a well, it should be folded to a length that will allow the well to be capped and also facilitate retrieval of the tubing during later sampling events. A length of rope or string should be used to tie the tubing to the well cap.

11. Complete the procedures for packaging, shipping, and handling with associated chain-of-custody.

12. Complete cleaning procedures for flow-through analytical cell and submersible pump, as appropriate.

13. At the end of the day, perform calibration check of field instruments.

If it is not technically feasible to use the low-flow sampling method, purging and sampling of monitoring wells may be conducted using the bailer method as outlined below:

1. Don appropriate PPE (as required by the HASP).

2. Place plastic sheeting around the well.

3. Clean sampling equipment.

4. Open the well cover while standing upwind of the well. Remove well cap and place on the plastic sheeting. Insert PID probe approximately 4 to 6 inches into the casing or the well headspace and cover with gloved hand. Record the PID reading in the field log. If the well headspace reading is less than 5 PID units, proceed; if the headspace reading is greater than 5 PID units, screen the air within the breathing zone. If the breathing zone reading is less than 5 PID units, proceed. If the PID reading in the breathing zone is above 5 PID units, move upwind from well for 5 minutes to allow the volatiles to dissipate. Repeat the breathing zone test. If the reading is still above 5 PID units, don appropriate respiratory protection in accordance with the requirements of the HASP. Record all PID readings. For wells that are part of the regular weekly monitoring program and prior PID measurements have not resulted in a breathing zone reading above 5 PID units, PID measurements will be taken monthly.

5. Measure the depth to water and determine depth of well by examining drilling log data or by direct measurement. Calculate the volume of water in the well (in gallons) by using the length of the water column (in feet), multiplying by 0.163 for a 2-inch well or by 0.653 for a 4-inch well. For other well diameters, use the formula:

   Volume (in gallons) = π TIMES **well radius** (in feet) **squared** TIMES **length of water column** (in feet) TIMES **7.481** (gallons per cubic foot)

6. Measure a length of rope at least 10 feet greater than the total depth of the well. Secure one end of the rope to the well casing and secure the other end to the bailer. Test the knots and make sure the rope will not loosen. Check bailers so that all parts are intact and will not be lost in the well.

7. Lower bailer, submersible pump, or peristaltic pump tubing (whichever is applicable) into well and remove one well volume of water. Contain all water in appropriate containers.

8. Monitor the field indicator parameters (e.g., turbidity, temperature, specific conductance, and pH). Measure field indicator parameters using a clean container such as a glass beaker or sampling cups provided with the instrument. Record field indicator parameters on the groundwater sampling log.

9. Repeat Steps 7 and 8 until three or four well volumes have been removed. Examine the field indicator parameter data to determine if the parameters have stabilized. The well is considered stabilized and ready for sample collection when turbidity values remain within 10% (or within 1 NTU if the turbidity reading is less than 10 NTU), the specific conductance and temperature values remain within 3%, and pH remains within 0.1 units for three consecutive readings collected once per well volume removed.

10. If the field indicator parameters have not stabilized, remove a maximum of five well volumes prior to sample collection. Alternatively, five well volumes may be removed without measuring the field indicator parameters.

11. If the recharge rate of the well is very low, wells screened across the water table may be bailed dry and sampling should commence as soon as the volume in the well has recovered sufficiently to permit collection of samples. For wells screened entirely below the water table, the well should only be bailed down to a level slightly higher than the bentonite seal above the well screen. The well should not be bailed completely dry, to maintain the integrity of the seal. Sampling should commence as soon as the well volume has recovered sufficiently to permit sample collection.

12. Following purging, allow water level in well to recharge to a sufficient level to permit sample collection.

13. Complete the sample label and cover the label with clear packing tape to secure the label onto the container.

14. Slowly lower the bailer into the screened portion of the well and carefully retrieve a filled bailer from the well causing minimal disturbance to the water and any sediment in the well.

15. The sample collection order (as appropriate) will be as follows:

    a. VOCs;
    b TOC;
    c. SVOCs;
    d. metals and cyanide; and
    e. others.

16. When sampling for volatiles, collect water samples directly from the bailer into 40-mL vials with Teflon®-lined septa.

17. For other analytical samples, remove the cap from the large glass mixing container and slowly empty the bailer into the large glass mixing container. The sample for dissolved metals and/or filtered PCBs should either be placed directly from the bailer into a pressure filter apparatus or pumped directly from the bailer with a peristaltic pump, through an in-line filter, into the pre-preserved sample bottle.

18. Continue collecting samples until the mixing container contains a sufficient volume for all laboratory samples.

19. Mix the entire sample volume with the Teflon® stirring rod and transfer the appropriate volume into the laboratory jar(s). Secure the sample jar cap(s) tightly.

20. If sampling for total and filtered metals and/or PCBs, a filtered and unfiltered sample will be collected. Sample filtration for the filtered sample will be performed in the field using a peristaltic pump prior to preservation. Install new medical-grade silicone tubing in the pump head. Place new Teflon® tubing into the sample mixing container and attach to the intake side of pump tubing. Attach (clamp) a new 0.45-micron filter (note the filter flow direction). Turn the pump on and dispense the filtered liquid directly into the laboratory sample bottles.

21. Secure with packing material and store at 4°C in an insulated transport container provided by the laboratory.

22. After sample containers have been filled, remove one additional volume of groundwater. Measure the pH, temperature, turbidity, and conductivity. Record on the groundwater sampling log or bound field logbook the time sampling procedures were completed, any pertinent observations of the sample (e.g., physical appearance, and the presence or lack of odors or sheens), and the values of the field indicator parameters.

23. Remove bailer from well, secure well, and properly dispose of PPE and disposable equipment.

24. If a bailer is to be dedicated to a well, it should be secured inside the well above the water table, if possible. Dedicated bailers should be tied to the well cap so that inadvertent loss of the bailer will not occur when the well is opened.

25. Complete the procedures for packaging, shipping, and handling with associated chain-of-custody.

VII. Waste Management

Materials generated during groundwater sampling activities, including disposable equipment, will be placed in appropriate containers. Containerized waste will be disposed of by the client consistent with the procedures identified in the HASP.

VIII. Data Recording and Management

Sampling activities will be documented in a proper field notebook. Pertinent information will include personnel present on site; times of arrival and departure; significant weather conditions; timing of well sampling activities; observations of purge water color, turbidity, odor, sheen, etc.; purge rate; water levels before and during pumping; field parameters measured; sampling method used and analytical samples collected. Initial field logs and chain-of-custody records will be transmitted to the ARCADIS BBL PM at the end of each day unless otherwise directed by the PM. The groundwater team leader retains copies of the groundwater sampling logs.

IX. Quality Assurance

In addition to the quality control samples to be collected in accordance with this SOP, the following quality control procedures should be observed in the field:

- Collect samples from monitoring wells in order of increasing concentration, to the extent known.
- Equipment blanks should include the pump and tubing (if using disposable tubing) or the pump only (if using tubing dedicated to each well).
- Collect equipment blanks after wells with higher concentrations (if known) have been sampled.
- Operate all monitoring instrumentation in accordance with manufacturer's instructions and calibration procedures. Calibrate instruments at the beginning of each day and verify the calibration at the end of each day.
- Clean all groundwater sampling equipment prior to use in the first well and after each subsequent well using procedures for equipment decontamination.

X. References

United States Environmental Protection Agency (USEPA) Region I Low Stress (Low Flow) Purging and Sampling Procedures for the Collection of Groundwater Samples from Monitoring Wells (USEPA SOP No. GW0001; July 30, 1996).

USEPA. 1986. RCRA Groundwater Monitoring Technical Enforcement Guidance Document (September 1986).

USEPA. 1991. Handbook Groundwater, Volume ii Methodology, Office of Research and Development, Washington, DC. USEPN62S, /6-90/016b (July, 1991).

U.S. Geological Survey (USGS). 1977. National Handbook of Recommended Methods for Water-Data Acquisition: USGS Office of Water Data Coordination. Reston, Virginia.

Standard Operating Procedure: Chain-of-Custody, Handling, Packing, and Shipping

I. Scope and Application

This Standard Operating Procedure (SOP) describes the chain-of-custody, handling, packing, and shipping procedures for the delivery of samples that are protected from cross-contamination, tampering, mis-identification, and breakage, and are maintained in a controlled environment from the time of collection until receipt by the analytical laboratory.

II. Personnel Qualifications

BBL field sampling personnel will have current health and safety training, including 40-hour HAZWOPER training, site supervisor training, and site-specific training, as needed. In addition, BBL field sampling personnel will be versed in the relevant SOPs and possess the skills and experience necessary to successfully complete the desired field work.

III. Equipment List

The following materials, as required, will be available during chain-of-custody, handling, packing, and shipping procedures:

- indelible ink pens;
- polyethylene bags (resealable-type);
- clear packing tape, strapping tape, duct tape;
- custody seal evidence tape;
- appropriate sample containers, labels, and chain-of-custody forms;
- large (30 to 40 gallon) insulated coolers;
- ice;
- cushioning and absorbent material (i.e., vermiculite);
- thermometer; and
- field notebook.

IV. Cautions

If methanol preservation is used in soil samples, shipping containers must not exceed 500 mL total volume of methanol and must be labeled **"This package conforms to 49 CFR 173.4."**

V. Health and Safety Considerations

Follow health and safety procedures outlined in the site Health and Safety Plan (HASP).

VI. Procedures

Chain-of-Custody Procedures

1. Prior to collecting samples, complete the chain-of-custody record (Attachment 1 or laboratory equivalent) header information by filling in the project number, project name, and the name(s) of the sampling technician(s). Please note it is important that chain-of-custody information is printed legibly using indelible ink.

2. After sample collection, enter the individual sample information by filling in the following chain-of-custody fields:

   a. **STA. NO.** Indicates the station number or location that the sample was collected from. Appropriate values for this field include well locations, grid points, or soil boring identification numbers (e.g., MW-3, X-20, SB-30).

   b. **Date.** Indicates the date the sample was collected. The date format to be followed should be mm/dd/yyyy (e.g., 03/07/2005).

   c. **Time.** Indicates the time the sample was collected. The time value should be presented using military format. For example, 3:15 P.M. should be entered as 15:15.

   d. **Comp.** This field should be marked with an "X" if the sample was collected as a composite.

   e. **Grab.** This field should be marked with an "X" if the sample was collected as an individual grab sample.

   f. **Station Location.** This field should represent the complete sample name; although in some instances, it may be similar to the "STA. NO." field. An example of a complete sample name is "SB-3 (0.5-1.0)," where the 0.5-1.0 represents the depth interval in feet from where the sample was collected. Please note it is very important that the use of hyphens in sample names and depth units (i.e., feet or inches) remain consistent for all samples entered on the chain-of-custody form. Sample names may also use the abbreviations "MS/MSD," "FB," "TB," and "DUP" as prefixes or suffixes to indicate that the sample is a matrix spike/matrix spike duplicate, field blank, trip blank, or field duplicate, respectively.

   g. **Number of Containers.** This field represents the number of containers collected at the sampling location to be submitted for analysis.

   h. **Analytical Parameters.** The analytical parameters that the samples are being analyzed for should be written legibly on the diagonal lines to the right of the "number of containers" column. As much detail as possible should be presented to allow the analytical laboratory to properly analyze the samples. For example, polychlorinated biphenyl (PCB) analyses may be represented by entering "PCBs" or "Method 8082." Multiple methods and/or analytical parameters may be combined for each column (e.g., PCBs/VOCs/SVOCs or 8082/8260/8270). These columns should also be used to present project-specific parameter lists (e.g., Appendix IX+3 target analyte list or MADEP SW-846). Quality assurance/quality control (QA/QC) information may also be entered in a separate column for each parameter (e.g., PCBs - MS/MSD) to identify a sample that the laboratory is to use for a specific QA/QC requirement. Each sample that requires a particular parameter analysis will be identified by placing an "X" in the appropriate analytical parameter column.

   i. **Remarks.** The remarks field should be used to communicate special analytical requirements to the laboratory. These requirements may be on a per sample basis such as "extract and hold sample until notified," or may be used to inform the laboratory of special reporting requirements for the entire sample

delivery group (SDG). Reporting requirements that should be specified in the remarks column include: 1) turnaround time; 2) contact and address where data reports should be sent; 3) name of laboratory project manager; and 4) type of sample preservation used.

j. **Relinquished By.** This field should contain the signature of the sampling technician who relinquished custody of the samples to the shipping courier or the analytical laboratory.

k. **Date.** Indicates the date the samples were relinquished. The date format should be mm/dd/yyyy (e.g., 03/07/2005).

l. **Time.** Indicates the time the samples were relinquished. The time value should be presented using military format. For example, 3:15 P.M. should be entered as 15:15.

m. **Received By.** This field should contain the signature of the sample courier or laboratory representative who received the samples from the sampling technician.

3. Complete as many chain-of-custody forms as necessary to properly document the collection and transfer of the samples to the analytical laboratory.

4. Upon completing the chain-of-custody forms, forward two copies to the analytical laboratory and retain one copy for the field records.

Handling Procedures

1. After completing the sample collection procedures, record the following information in the field notebook with indelible ink:

   - project number and site name;
   - sample identification code and other sample identification information, if appropriate;
   - sampling method;
   - date;
   - name of sampler(s);
   - time;
   - location (project reference); and
   - any comments.

2. Fill in sample label with the following information in indelible ink:

   - sample type (e.g., surface water);
   - project number and site name;
   - sample identification code and other sample identification information, if applicable;
   - analysis required;
   - date;
   - time sampled;
   - initials of sampling personnel;
   - sample type (composite or discrete);
   - tissue preparation procedure (biota; e.g., fillets, whole body), if applicable; and
   - preservative added, if applicable.

3. Cover the label with clear packing tape to secure the label onto the container.

4. Check the caps on the sample containers to seal them tightly.

5. Wrap the sample container cap with clear packing tape to prevent it from becoming loose.

6. Place a signed custody seal label over the cap such that the cap cannot be removed without breaking the custody seal. Alternatively, if shipping several containers in a cooler, custody seal evidence tape may be placed on the shipping container as described below.

Packing Procedures

1. Using duct tape, secure the outside and inside of the drain plug at the bottom of the cooler being used for sample transport.

2. Place each container or package in individual polyethylene bags (resealable-type) and seal. If a cooler temperature blank is supplied by the laboratory, it should be packaged following the same procedures as the samples. If the laboratory did not include a temperature blank, do not add one since the sample temperature will be determined by the laboratory using a calibrated infrared thermometer.

3. Place 1 to 2 inches of cushioning material (i.e., vermiculite) at the bottom of the cooler.

4. Place the sealed sample containers upright in the cooler.

5. Package ice or blue ice in small resealable-type plastic bags and place loosely in the cooler. Do not pack ice so tightly that it may prevent the addition of sufficient cushioning material. Samples placed on ice will be cooled to and maintained at a temperature of approximately 4°C.

6. Fill the remaining space in the cooler with cushioning/absorbent material. The cooler must be securely packed and cushioned in an upright position and be surrounded by a sorbent material capable of absorbing spills from leaks or breakage of sample containers. (Note: to comply with 49 CFR 173.4, filled cooler must not exceed 64 pounds).

7. Place the completed chain-of-custody record(s) in a large resealable-type bag and tape the bag to the inside of the cooler lid.

8. Close the lid of the cooler and fasten with packing tape.

9. Wrap strapping tape around both ends of the cooler.

10. Mark the cooler on the outside with the following information: shipping address, return address, “Fragile, Handle with Care” labels on the top and on one side, and arrows indicating “This Side Up” on two adjacent sides.

11. Place custody seal evidence tape over front right and back left of the cooler lid and cover with clear plastic tape.

Note: Procedure numbers 2, 3, 5, and 6 may be modified in cases where laboratories provide customized shipping coolers. These coolers are designed so the sample bottles and ice packs fit snugly within preformed styrofoam cushioning and insulating packing material.

Shipping Procedures

1. All samples will be delivered by an express carrier within 48 hours of sample collection. Alternatively, a laboratory courier may be used for sample pickup. If parameters with short holding times are being analyzed (e.g., VOCs [EnCore™ Sampler], nitrate, ortho-phosphate [dissolved], and BOD), sampling personnel will take precautions so that the maximum holding times for these parameters will not be exceeded.

2. The following chain-of-custody procedures will apply to sample shipping:

   - Relinquish the sample containers to the laboratory via express carrier or laboratory courier. The signed and dated forms should be included in the cooler. The express carrier will not be required to sign the chain-of-custody forms.

   - When the samples are received by the laboratory, laboratory personnel will complete the chain-of-custody by recording the date and time of receipt of samples, measuring and recording the internal temperature of the shipping container, and checking the sample identification numbers on the containers to ensure they correspond with the chain-of-custody forms.

VII. Waste Management

Not applicable.

VIII. Data Recording and Management

Copies of chain-of-custody forms will be maintained in the project file.

IX. Quality Assurance

Chain-of-custody forms will be filled out in accordance with the Quality Assurance Project Plan (QAPP). A copy of the completed chain-of-custody form forwarded with the samples to the laboratory will be sent to the Project Manager for review. Subsequent chain-of-custody form submissions to the Project Manager will be at the Project Manager's discretion.

X. References

Not applicable.

ATTACHMENT 1

ARCADIS
Infrastructure, environment, facilities

ID#:

CHAIN OF CUSTODY & LABORATORY ANALYSIS REQUEST FORM

Page ___ of ___

Lab Work Order #

Send Results to:

Contact & Company Name:	Telephone:
Address:	Fax:
City State Zip	E-mail Address:
Project Name/Location (City, State):	Project #:
Sampler's Printed Name:	Sampler's Signature:

Preservative							
Filtered (✓)							
# of Containers							
Container Information							

PARAMETER ANALYSIS & METHOD

Keys

Preservation Key:
A. H_2SO_4
B. HCL
C. HNO_3
D. NaOH
E. None
F. Other: _____
G. Other: _____
H. Other: _____

Container Information Key:
1. 40 ml Vial
2. 1 L Amber
3. 250 ml Plastic
4. 500 ml Plastic
5. Encore
6. 2 oz. Glass
7. 4 oz. Glass
8. 8 oz. Glass
9. Other: _____
10. Other: _____

Matrix Key:
SO - Soil, SE - Sediment, NL - NAPL/Oil
W - Water, SL - Sludge, SW - Sample Wipe
T - Tissue, A - Air, Other: _____

Sample ID	Collection Date	Collection Time	Type (✓) Comp	Type (✓) Grab	Matrix								REMARKS

Special Instructions/Comments:

☐ **Special QA/QC Instructions(✓):**

Laboratory Information and Receipt		Relinquished By	Received By	Relinquished By	Laboratory Received By
Lab Name:	Cooler Custody Seal (✓)	Printed Name:	Printed Name:	Printed Name:	Printed Name:
☐ Cooler packed with ice (✓)	☐ Intact ☐ Not Intact	Signature:	Signature:	Signature:	Signature:
Specify Turnaround Requirements:	Sample Receipt:	Firm:	Firm/Courier:	Firm/Courier:	Firm:
Shipping Tracking #:	Condition/Cooler Temp: _____	Date/Time:	Date/Time:	Date/Time:	Date/Time:

20730826 CofC AR Form 01.12.2007

Distribution: **WHITE – Laboratory returns with results** **YELLOW – Lab copy** **PINK – Retained by BBL**

ARCADIS
Infrastructure · Water · Environment · Buildings

ARCADIS
Infrastructure, environment, facilities

Imagine the result

Monitoring Well Decommissioning

Rev. #: 0

Rev Date: July 25, 2010

Approval Signatures

Prepared by: Matthew C. McCaughey Date: 07/25/2010

Reviewed by: Date: 07/26/2010
(Technical Expert)

I. Scope and Application

This standard operating procedure (SOP) describes the procedures for decommissioning groundwater monitoring wells. Monitoring wells may be decommissioned when it is found they are no longer suitable for collection of groundwater data (i.e., groundwater quality or groundwater elevation) due to damaged and/or questionable construction, when they must be removed to avoid interference to/from other construction activities in the area, or when groundwater monitoring is no longer required at the location. The purpose for decommissioning monitoring wells no longer in use is to:

- Eliminate physical hazards associated with an out-of-use monitoring well;
- Conserve the yield and hydrostatic head of confining aquifers;
- Prevent the intermingling of separate aquifers; and
- Remove a potential conduit for the vertical migration of constituents in groundwater along the well casing.

This SOP covers the decommissioning of single-cased overburden monitoring wells when a replacement well will not be installed within the same borehole. Three potential decommissioning methods (i.e., plugging-in-place, casing removal, and overdrilling) are described below.

Although these procedures are generally applicable for the decommissioning of double-cased monitoring wells or wells installed within bedrock, in most cases a decommissioning strategy should be developed on a well-by well basis. Additional information regarding potential methods to decommission these types of wells may be found in ASTM D5299-99 - Standard Guide for Decommissioning of Ground Water Wells, Vadose Zone Monitoring Devices, Boreholes, and Other Devices for Environmental Activities.

II. Personnel Qualifications

The well decommissioning procedures described below will be carefully adhered to and conducted under the supervision of an experienced geologist, engineer, or other qualified individual. If the overdrilling decommissioning method is utilized, drilling activities will be conducted by a registered well driller.

III. Equipment List

The following materials, as required, shall be available during pre-decommissioning and decommissioning activities:

- Site Health and Safety Plan (HASP);
- Health and safety equipment, as required in the HASP (e.g., air monitoring equipment, personal protective equipment);
- Information concerning the construction of the well to be decommissioned;
- Appropriate field forms or field notebook;
- Well keys;
- Water level probe;
- Cleaning materials;
- Drill rig with registered well driller and experienced personnel if the overdrilling method is utilized;
- Tremie pipe;
- Type I Portland cement;
- Uncoated bentonite pellets;
- Potable water;
- Containers for collecting spoils; and
- Any necessary specialized well drilling/decommissioning equipment.

IV. Cautions

Avoid using drilling fluids or materials that could impact groundwater or soil quality, or could be incompatible with the subsurface conditions.

Water used for over drilling or grouting boreholes upon completion will be of a quality acceptable for project objectives. If the water quality is unknown, testing of water supply should be considered.

Specifications of materials used for backfilling the bore hole will be obtained, reviewed and approved to meet project quality objectives.

No coated bentonite pellets will be used in monitoring well decommissioning, as the coating could be a source of contamination.

V. Health and Safety Considerations

Health and safety protocols should be described in the site-specific health and safety plan.

VI. Procedures

Plug-In Place Method

The plug-in-place method is applicable at locations where available information indicates that the annular space contains an adequate seal and vertical migration of constituents across a confining layer is not a concern in the well casing and screen interval, or if other considerations (e.g., double-cased well construction) preclude removal of the well casing. The well screen is left in place and may be additionally perforated, along with the base of the well, to allow the grout seal to penetrate the surrounding filter pack. The decommissioning process will consist of the following steps:

1. Perform a search of available records concerning the well to be decommissioned. The following activities should be performed to identify the location, construction, and condition of the well, and to determine the appropriate equipment to be utilized based on the depth, diameter, and access to the monitoring well:

    - Review the existing monitoring well log to identify construction characteristics (e.g., total depth, casing diameter, initial borehole diameter, type of casing, type of material(s) used);

    - Locate the monitoring well in the field;

    - Identify if the decommissioning equipment can access the monitoring well and/or if special considerations (e.g., construction of an access road) are necessary to gain access;

    - Conduct total depth measurements and water level measurements;

- Calculate the volume of the well that will need to be filled utilizing field measurements and formulas provided above; and

- Record all observations and measurements.

2. Remove the protective casing and well casing to a depth of approximately 3 to 4 feet below ground surface (bgs), if possible.

3. Perforate the base of the well screen utilizing a length of drilling rod or other equipment.

4. Prepare a neat cement grout. (Note: A neat cement grout is preferred for application through an in-place well; whereas, a bentonite grout or hydrated bentonite pellets may also be considered at locations where the well casing is removed or the well is overdrilled).

5. Place the neat cement grout in the perforated well casing via the tremie method (i.e., the grout will be pumped from the bottom of the well upward). The grout will be added until the well is filled to above the top of the well casing remaining in place (i.e., typically approximately 3 to 4 feet bgs). Verify that the amount of grout added equals or exceeds the calculated volume of the void to be filled.

6. The grout will be allowed to set for a minimum of 24 hours and the remainder of the borehole will be filled with concrete and/or other surface finish materials (see Step 7 below).

7. Where appropriate, a concrete surface finish will be installed by constructing an above-grade concrete slab a minimum of 6 inches thick, with a diameter at least 2 feet greater than the diameter of the borehole. If such a concrete surface finish is not compatible with the existing land use (e.g., roadway, parking lot, residential), the borehole shall be terminated with a minimum 1-foot-thick concrete plug above the grout and the remaining portion of the borehole shall be filled flush with grade with material(s) compatible with the surrounding land surface (e.g., asphalt, gravel, topsoil).

8. A Well Abandonment Log will be completed. A state specific Well Abandonment Log should be used and submitted to the appropriate state agency if required. .

Casing Removal Method

The casing removal method is applicable at shallow locations where vertical migration of constituents across a confining layer is not a concern and where the integrity of the

borehole is reasonably expected to be maintained following removal of the well materials. The decommissioning process will consist of the following steps:

1. Perform a search of available records concerning the well to be decommissioned. The following activities should be performed to identify the location, construction, and condition of the well, and determine the appropriate equipment to be utilized based on the depth, diameter, and access to the monitoring well:

    - Review the existing monitoring well log to identify construction characteristics (e.g., total depth, casing diameter, initial borehole diameter, type of casing, type of material(s) used);
    - Locate the monitoring well in the field;
    - Identify if the decommissioning equipment can access the monitoring well and/or if special considerations (e.g., construction of an access road) are necessary to gain access;
    - Conduct total depth measurements and water level measurements;
    - Calculate volume of well that will need to be filled utilizing field measurements and formulas provided above; and
    - Record all observations and measurements.

2. Remove the protective casing, if possible.

3. Remove the well materials (riser and screen).

4. Examine removed well materials to ensure that the entire section has been removed. Also ensure that the borehole has not collapsed and that the tremie pipe will be able to be inserted to the base of well depth. Well decommissioning should be completed by using the overdrilling method if the well casing is broken below grade and cannot be retrieved, or if the tremie pipe will not reach the base of the well.

5. Prepare a neat cement grout or a bentonite grout that is compatible with the soil and groundwater conditions present at the monitoring well. (Note: A neat cement grout or a bentonite grout is preferred for this application. Hydrated bentonite pellets may also be considered if the entire well boring is overdrilled, using procedures similar to those for abandoning boreholes).

6. Place the cement grout in the borehole via tremie method (i.e., the grout will be pumped from the bottom of the borehole upward). The grout will be added until the borehole is filled to approximately 3 to 4 feet bgs. Verify that amount of grout added equals or exceeds the calculated volume of the void to be filled.

7. The grout will be allowed to set for a minimum of 24 hours and the remainder of the borehole will be filled with concrete and/or other surface finish materials (see Step 8 below).

8. Where appropriate, a concrete surface finish will be installed by constructing an above-grade concrete slab a minimum of 6 inches thick, with a diameter at least 2 feet greater than the diameter of the borehole. If such a concrete surface finish is not compatible with the existing land use (e.g., roadway, parking lot, residential), the borehole shall be terminated with a minimum 1-foot-thick concrete plug above the grout and the remaining portion of the borehole shall be filled flush with grade with material(s) compatible with the surrounding land surface (e.g., asphalt, gravel, topsoil).

A Well Abandonment Log will be completed. A state specific Well Abandonment Log should be used and submitted to the appropriate state agency if required.

Overdrilling Method

The overdrilling method is the most conservative decommissioning procedure and should be utilized at locations where a well has penetrated a confining layer and there is no evidence that the annular space around the well casing was adequately sealed, or if attempts to remove the well casing are unsuccessful. The decommissioning process will consist of the following steps:

1. Perform a search of available records concerning the well to be decommissioned. The following activities should be performed to identify the location, construction, and condition of the well, and determine the appropriate equipment to be utilized based on the depth, diameter, and access to the monitoring well:

    - Review the existing monitoring well log to identify construction characteristics (e.g., total depth, casing diameter, initial borehole diameter, type of casing, type of material(s) used);

    - Locate the monitoring well in the field;

- Identify if a drill rig can access the monitoring well and/or if special considerations (e.g., construction of an access road) are necessary to gain access;
- Conduct total depth measurements and water level measurements;
- Calculate the volume of the well/borehole that will need to be filled utilizing field measurements and formulas provided above; and
- Record all observations and measurements.

2. Remove the protective casing, if possible.

3. If the protective casing has been removed, advance a hollow-stem auger or other drill casing (with an outside diameter larger than the well diameter) over the well casing to the bottom of the original borehole.

4. Prepare a neat cement grout or a bentonite grout that is compatible with the soil and groundwater conditions present at the monitoring well. Alternatively, hydrated bentonite pellets may be used to plug the borehole, using procedures similar to those for abandoning boreholes.

5. Place the cement grout in the borehole via tremie method (i.e., the grout will be pumped from the bottom of the borehole upward) at the same time the hollow-stem augers or drill casing are removed from the borehole. Grout will be added until the borehole is filled to approximately 3 to 4 feet bgs. Verify that the amount of grout added equals or exceeds the calculated volume of the void to be filled. If hydrated bentonite pellets are utilized, measure deposition depth with a weighted tape as the hollow-stem augers or drill casing are removed from the borehole to ensure that bridging does not occur. At certain shallow well locations installed in competent formations, it may be possible to remove the hollow-stem augers or drill casing prior to installing the sealant. If this is attempted, confirmatory measurements must be taken to verify that borehole integrity was maintained prior to plugging the hole.

6. The grout will be allowed to set for a minimum of 24 hours and the remainder of the borehole will be filled with concrete and/or other surface finish materials (see Step 7 below).

7. Where appropriate, a concrete surface seal will be installed by constructing an above-grade concrete slab a minimum of 6 inches thick, with a diameter at least 2 feet greater than the diameter of the borehole. If such a concrete surface seal is not compatible with the existing land use (e.g., roadway, parking lot,

residential), the borehole shall be terminated with a minimum 1-foot-thick concrete plug above the grout and the remaining portion of the borehole shall be filled flush with grade with material(s) compatible with the surrounding land surface (e.g., asphalt, gravel, topsoil).

8. A Well Abandonment Log will be completed. A state specific Well Abandonment Log should be used and submitted to the appropriate state agency if required.

Abandoning a Soil Boring

The following steps for abandoning a soil boring are summarized from ASTM D 5299-99:

1. Prepare a neat cement grout using Type I Portland cement and potable water mixed according to the following ratios:

   One (1) 94-pound bag of Type I Portland cement; and 5.5 gallons potable water.

2. As soon as the borehole is completed, place a grout pipe (tremie pipe) to the bottom of the boring and pump sealing grout slowly through the pipe to displace material in the borehole. Inject grout starting from the bottom of the hole. Grout slowly to prevent channeling of the grout. As the grouting progresses, slowly raise the pipe. Complete the grouting in one continuous operation, continuing to pump grout until overflowing grout is seen at the surface. The overflowing grout should be similar in appearance and characteristics to the grout being pumped down the hole.

3. Grout may settle over a 24-hour period. After 24 hours, check the grout in the borehole for settlement. If settling has occurred, place additional grout to the surface. When grouting is complete, finish the surface in a manner appropriate for final use (e.g., concrete).

VII. Waste Management

Waste management protocols should be described in the site-specific work plan.

VIII. Data Recording and Management

To assure that a well is properly plugged and there has been no bridging of the plugging materials, verification calculations and measurements are required to determine whether the volume of material placed in the well/borehole equals or

exceeds the volume of the void being filled. Some useful formulas for calculating well and material volumes are provided below.

- 7.481 gallons = 1 cubic foot
- 202.0 gallons = 1 cubic yard
- Volume of well/borehole (in gallons) = π TIMES well/borehole radius (in feet) squared TIMES length of well/borehole (in feet) TIMES 7.481 (gallons per cubic foot)

IX. Quality Assurance

Quality assurance protocols should be described in the site-specific work plan.

X. References

ASTM. D5299-99. Standard Guide for Decommissioning of Ground Water Wells, Vadose Zone Monitoring Devices, Boreholes, and Other Devices for Environmental Activities.

Appendix B

Final Design Submittal
Drawing Set

CITY: SYRACUSE, NY DIV/GROUP: ENV/CADD DB:K.SARTORI PIC:J.VOGELEY PM/TM: WMCGUNE LYR:ON=*;OFF=*REF*
G:\ENVCAD\SYRACUSE\ACT\B0046918\0000\00010\DWG\FINAL_DESIGN\469180001.dwg LAYOUT: COVER SAVED: 2/10/2012 11:00 AM ACADVER: 18.1S (LMS TECH) PAGESETUP: ---- PLOTSTYLETABLE: PLTCONT1.CTB PLOTTED: 2/10/2012 11:30 AM BY: SARTORI, KATHERINE
XREFS: IMAGES: PROJECTNAME: ----
46918X01.tif

FINAL DESIGN SUBMITTAL

GROUNDWATER REMEDIATION SYSTEM

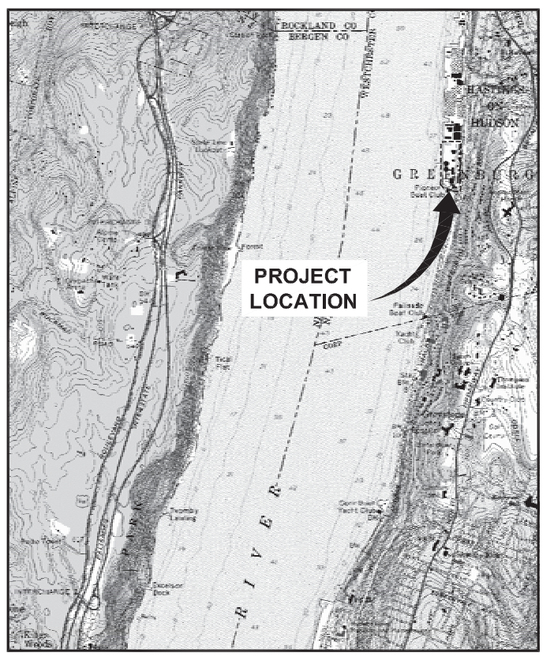

REFERENCE: BASE MAP USGS 7.5 MINUTE QUADRANGLE., HUDSON NORTH, N.Y., 1953. HUDSON SOUTH, N.Y., 1963. PHOTOREVISED 1980.

LOCATION MAP

0 2000' 4000'
GRAPHIC SCALE

FEBRUARY 2012

FORMER TAPPAN TERMINAL SITE
HASTINGS-ON-HUDSON, NEW YORK

ARCADIS

ARCADIS OF NEW YORK, INC.

INDEX TO DRAWINGS

	COVER
1.	SITE PLAN
2.	PROCESS FLOW DIAGRAM
3.	PIPING AND INSTRUMENTATION DIAGRAM (1)
4.	PIPING AND INSTRUMENTATION DIAGRAM (2)
5.	LEGEND, ABBREVIATIONS AND INTERLOCK SCHEDULE
6.	EQUIPMENT LAYOUT
7.	MISCELLANEOUS DETAILS AND SECTIONS (1)
8.	MISCELLANEOUS DETAILS AND SECTIONS (2)
9.	MISCELLANEOUS DETAILS AND SECTIONS (3)
10.	EXTRACTION & INJECTION WELL CONSTRUCTION DETAILS
11.	INFILTRATION TRENCH DETAIL
12.	SPECIFICATIONS
E01	ONE-LINE DIAGRAM
E02	ELECTRICAL EQUIPMENT LAYOUT
E03	ELECTRICAL SITE PLAN
E04	RISER DIAGRAM
E05	SIGNAL LIST

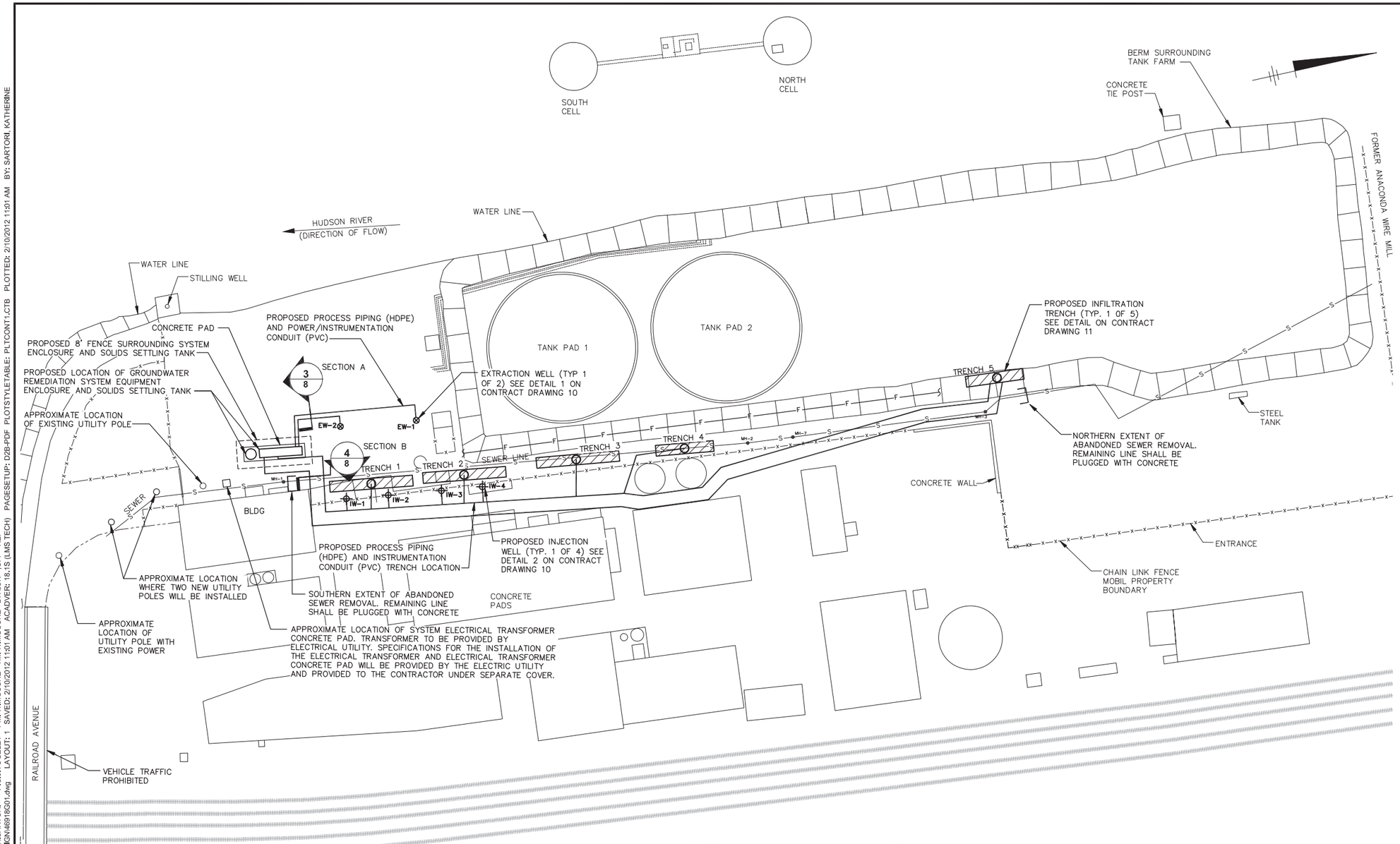

GENERAL CONSTRUCTION NOTES:

1. ALL WORK DESCRIBED IN THESE DRAWINGS/SPECIFICATIONS SHALL BE PERFORMED ON BEHALF OF CHEVRON ENVIRONMENTAL MANAGEMENT COMPANY.
2. SUBCONTRACTORS SHOULD VISIT THE SITE AND EXAMINE ALL OF THE PHYSICAL CONDITIONS THAT AFFECT THE FINAL BID PRICE.
3. SUBCONTRACTORS SHALL OBTAIN ALL NECESSARY FIELD MEASUREMENTS TO VERIFY THE ABILITY TO EXECUTE THE WORK IN ACCORDANCE WITH THIS SCOPE OF WORK AND DRAWINGS. NO ADDITIONS OR REVISIONS TO THE BID OR CONTRACT PRICE WILL BE PERMITTED BASED ON EXISTING CONDITIONS.
4. SUBCONTRACTORS SHALL PROVIDE ALL LABOR, MATERIAL, AND EQUIPMENT, UNLESS OTHERWISE STATED, NECESSARY TO PERFORM THIS WORK.
5. SUBCONTRACTORS SHALL BE RESPONSIBLE FOR OBTAINING ALL TRADE PERMITS, AND APPROVALS NECESSARY TO PERFORM THIS WORK.
6. ALL INFORMATION PRESENTED ON THESE DRAWINGS IS CONFIDENTIAL.
7. WHILE CONSTRUCTION ACTIVITIES ARE UNDER WAY AT LEAST ONE SUBCONTRACTOR, FOREMAN, OR CREW SUPERVISOR SHALL BE PRESENT AT THE JOB SITE AT ALL TIMES AND WILL BE DIRECTLY REPORTABLE TO THE ARCADIS CONSTRUCTION SUPERVISOR.
8. SUBCONTRACTORS ARE RESPONSIBLE FOR LOCATING AND VERIFYING LOCATION OF ALL UTILITIES WITHIN AREA AFFECTED BY CONSTRUCTION. COPIES OF PRINTS OBTAINED OR LOCATIONS PROVIDED TO CONTRACTOR WITH RESPECT TO UTILITIES SHALL BE SUPPLIED TO THE ENGINEER WITH A RECORD SET OF DRAWINGS AT COMPLETION OF CONSTRUCTION. IF A CONFLICT EXISTS BETWEEN THE UTILITY LOCATION AND THE CONSTRUCTION DRAWINGS, CONTRACTOR IS TO NOTIFY THE ENGINEER IMMEDIATELY SO THAT THE CONFLICT MAY BE RESOLVED.
9. SUBCONTRACTORS ARE RESPONSIBLE FOR PROVIDING THE ENGINEER WITH ALL INFORMATION REQUIRED TO COMPLETE A SET OF "RECORD" DRAWINGS BY KEEPING A RECORD SET OF DAILY PROGRESSION OF WORK.
10. UNLESS OTHERWISE NOTED, ALL AREAS DISTURBED BY THIS WORK SHALL BE RESTORED TO ORIGINAL CONDITION.
11. SUBCONTRACTOR SHALL PROTECT AND PRESERVE ALL EXISTING FEATURES (I.E. MONITORING WELLS, EQUIPMENT, ETC.) WITHIN AREAS AFFECTED BY CONSTRUCTION. DAMAGE SUSTAINED TO AN EXISTING FEATURE WILL BE REPAIRED/REPLACED AT SUBCONTRACTOR'S EXPENSE.
12. SUBCONTRACTOR SHALL PERFORM ALL WORK IN ACCORDANCE WITH ALL COUNTY, LOCAL, STATE, AND FEDERAL REGULATIONS, INCLUDING, BUT NOT LIMITED TO, ALL APPLICABLE LOCAL, STATE, AND/OR FEDERAL (OSHA, USEPA, AND DOT, ETC.) RULES AND REGULATIONS.
13. UNLESS OTHERWISE INDICATED HEREIN, ALL MATERIALS AND EQUIPMENT FURNISHED UNDER THIS CONTRACT SHALL BE NEW, FREE FROM DEFECTS, AND SHALL BE GUARANTEED FOR A PERIOD OF AT LEAST ONE YEAR FROM THE DATE OF ACCEPTANCE OF THE WORK. THE CONTRACTOR SHALL FURNISH, AT NO COST TO THE ENGINEER, ALL LABOR AND MATERIALS NECESSARY TO CORRECT PROBLEMS DUE TO FAULTY WORKMANSHIP OR MATERIALS.
14. OTHER CONSTRUCTION ACTIVITIES MAY BE TAKING PLACE CONCURRENTLY WITH THIS PROJECT. THE CONTRACTOR SHALL CONSULT WITH THE VARIOUS PARTIES AND SHALL COORDINATE SCHEDULES.
15. THE INFORMATION SHOWN ON THE DRAWINGS CONCERNING TYPE AND LOCATION OF UNDERGROUND UTILITIES IS NOT GUARANTEED TO BE ACCURATE OR ALL INCLUSIVE. THE SUBCONTRACTOR IS RESPONSIBLE FOR MAKING HIS OWN DETERMINATIONS AS TO THE TYPE AND LOCATION OF UNDERGROUND UTILITIES AS MAY BE NECESSARY TO AVOID DAMAGE THERETO.
16. PIPE ROUTING SHOWN FOR CONSTRUCTION LAYOUT PURPOSES ONLY. ACTUAL ROUTING TO BE FIELD DETERMINED AND IS SUBJECT TO ENGINEER'S APPROVAL.
17. ALL PIPING PRESSURE TESTS SHALL BE MADE BY THE SUBCONTRACTOR IN THE PRESENCE OF THE ENGINEER OR CONSTRUCTION SUPERVISOR. PIPE TESTING PROTOCOL TO BE PROVIDED UNDER SEPARATE COVER.
18. THE SUBCONTRACTOR SHALL PROVIDE ALL PRODUCTS AND PROPERLY CALIBRATED TESTING EQUIPMENT REQUIRED TO PERFORM THE PIPING PRESSURE TESTING WORK.
19. TESTS MAY BE PERFORMED ON SEPARATE SECTIONS OF PIPING TO EXPEDITE CONSTRUCTION. THE SUBCONTRACTOR SHALL NOT PERFORM PRESSURE TESTING AGAINST SYSTEM VALVES.
20. EXCAVATIONS SHALL BE KEPT FREE FROM STANDING WATER. WATER REMOVED FROM EXCAVATION SHALL BE PROPERLY TREATED IN ACCORDANCE WITH SPECIFICATIONS (PROVIDED UNDER SEPARATE COVER). ONCE TREATED EXCAVATION WATER IS PROVED TO BE WITHIN PERMIT REQUIREMENTS, TREATED EXCAVATION WATER SHALL BE DISCHARGED TO THE RIVER UNDER EXISTING DISCHARGE PERMIT.
21. SUBCONTRACTOR SHALL NOTIFY THE ENGINEER AT THE COMPLETION OF EXCAVATIONS AND TRENCHING TO ALLOW FOR INSPECTIONS.
22. SUBCONTRACTOR SHALL PROVIDE APPROPRIATE SAFETY BARRICADES AROUND TRENCHING AND EXCAVATION TO PREVENT ACCIDENTS OR UNAUTHORIZED ENTRY.
23. BACKFILL OF TRENCHES IN UNPAVED AREAS WILL BE APPLIED IN 1-FOOT COMPACTED LIFTS. BACKFILL OF TRENCHES IN DESIGNATED ROAD CROSSING AREAS SHALL BE APPLIED IN 6-INCH COMPACTED LIFTS SUCH THAT A 95% MODIFIED PROCTOR DENSITY SHALL BE ACHIEVED.
24. SUBCONTRACTOR'S FILL SOURCE MUST BE APPROVED BY THE ENGINEER PRIOR TO COMMENCING THE WORK AND/OR PLACING THE MATERIAL.
25. EXCAVATIONS WILL BE BACKFILLED AS PROMPTLY AS WORK PERMITS ONCE REQUIRED INSPECTIONS HAVE BEEN COMPLETED AND OTHER ASSOCIATED WORK HAS BEEN COMPLETED.
26. DO NOT PLACE MATERIALS ON SURFACES THAT ARE MUDDY, FROZEN, OR CONTAIN ICE OR FROST.
27. CONTRACTOR SHALL PLACE A STRIP(S) OF UTILITY WARNING TAPE SPACED AT 18 INCHES ON CENTER IN ALL TRENCHED AREAS. THIS TAPE SHALL CONTAIN A WIRE FOR METAL DETECTION OR HAVE AN ALUMINUM CORE. TAPE SHALL BE PLACED AT A DEPTH OF 6 INCHES IN NON-PAVED AREAS AND BELOW THE SUBBASE IN PAVED AREAS.
28. PAVED OR STONE DRIVE AREAS SHALL BE RESTORED TO ORIGINAL CONDITION. UNLESS OTHERWISE SPECIFIED BY ARCADIS.

LEGEND:

- MH-7 ● SANITARY SEWER MANHOLE
- —S— SANITARY SEWER
- APPROXIMATE LOCATION OF INFILTRATION TRENCH
- IW-1 INJECTION WELL
- EW-1 EXTRACTION WELL
- —x— EXISTING FENCE
- EXTENT OF ABANDONED SEWER REMOVAL
- —F— APPROXIMATE LOCATION OF EXISTING ABANDONED FIRE WATER LINE

NOTES:

1. BASEMAP PROVIDED BY WOODARD & CURRAN, FIGURE 1, TITLED "GROUNDWATER CONTOUR PLAN", DATED JAN 2002.
2. LOCATIONS OF EXTRACTION WELLS, INJECTION WELLS, PIPE RUNS, AND INFILTRATION TRENCHES ARE APPROXIMATE. EXACT LOCATIONS TO BE FIELD DETERMINED AND ENGINEER APPROVED.
3. PORTIONS OF THE EXISTING FENCE MAY HAVE TO BE TEMPORARILY REMOVED AND REPLACED FOLLOWING CONSTRUCTION ACTIVITIES.
4. TREES AND VEGETATION NEAR AND AROUND WHERE SYSTEM COMPONENTS WILL BE INSTALLED AND WHERE ABANDONED SEWER LINE IS TO BE REMOVED SHALL BE CLEARED AND STOCK PILED.
5. RAILROAD AVENUE ACCESS POINT RESTRICTED TO FOOT TRAFFIC.
6. ACCESS AND EGRESS TO/FROM THE SITE SHALL BE CONTROLLED THROUGH THE ACCESS GATE TO THE NORTH OF THE SITE.

FINAL DESIGN SUBMITTAL

1"=50' 50' 0 50' 100'

THIS BAR REPRESENTS ONE INCH ON THE ORIGINAL DRAWING: USE TO VERIFY FIGURE REPRODUCTION SCALE

No.	Date	Revisions	By	Ckd

THIS DRAWING IS THE PROPERTY OF THE ARCADIS ENTITY IDENTIFIED IN THE TITLE BLOCK AND MAY NOT BE REUSED OR ALTERED IN WHOLE OR IN PART WITHOUT THE EXPRESS WRITTEN PERMISSION OF SAME.

Professional Engineer's Name: TIMOTHY E. MILLER
Professional Engineer's No.: 077919-1
State: NY | Date Signed: | Project Mgr.: WTM
Designed by: AMR | Drawn by: KLS | Checked by: TEM/AMR

ARCADIS
ARCADIS OF NEW YORK, INC.

FORMER TAPPAN TERMINAL SITE ● HASTINGS ON HUDSON, NEW YORK
GROUNDWATER REMEDIATION SYSTEM

SITE PLAN

GENERAL

ARCADIS Project No. B0046918.0000.00010
Date FEBRUARY 2012

ARCADIS
6723 TOWPATH RD
PO BOX 66
SYRACUSE, NY 13214-0066
TEL. 315.446.9120

1

CITY: SYRACUSE, NY DIV/GROUP: ENV/CADD DB: GMS KFS GMS K.SARTORI PIC: J.VOGELEY PM: W.MCCUNE TM: W.MCCUNE LYR: ON=*;OFF=*REF*
G:\ENVCAD\SYRACUSE\ACT\B0046918\0000\00010\DWG\FINAL_DESIGN\46918G01.dwg LAYOUT: 1 SAVED: 2/10/2012 11:31 AM ACADVER: 18.1S (LMS TECH) PAGESETUP: D2B-PDF PLOTSTYLETABLE: PLTCONT1.CTB PLOTTED: 2/10/2012 11:31 AM BY: SARTORI, KATHERINE
XREFS: 46918X01 46918X00 IMAGES: PROJECTNAME: --

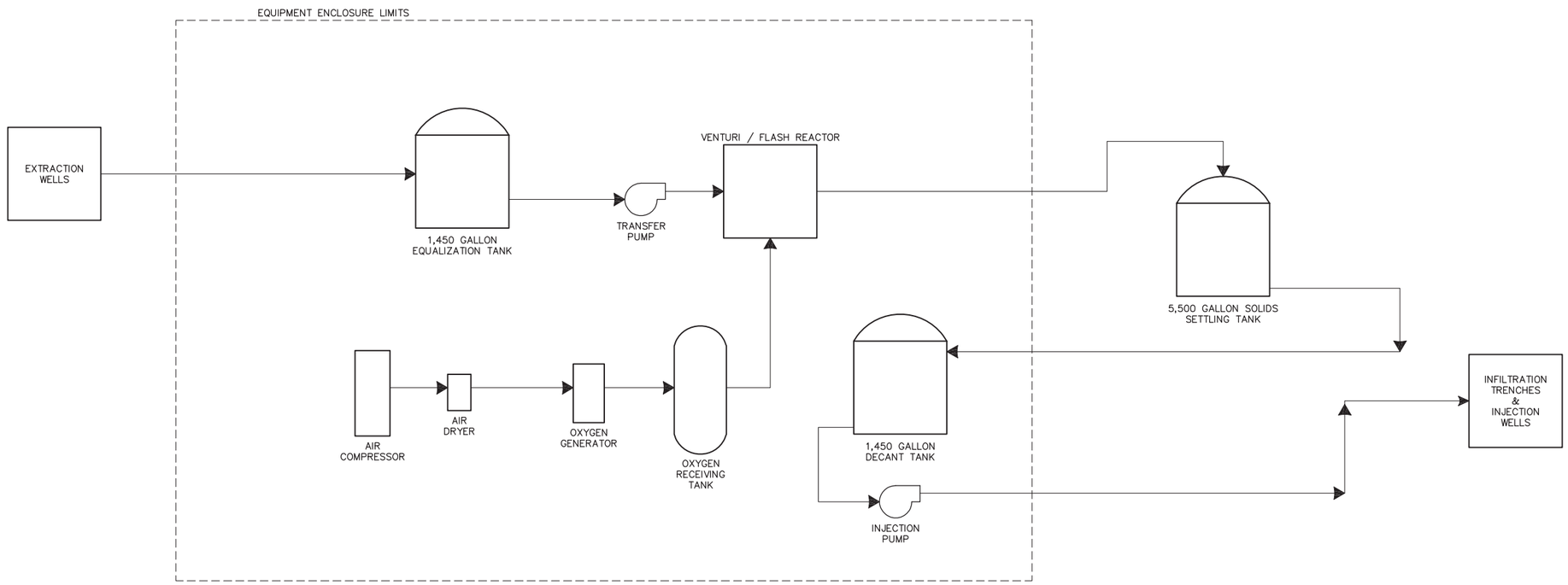

FINAL DESIGN SUBMITTAL

No.	Date	Revisions	By	Ckd

THIS DRAWING IS THE PROPERTY OF THE ARCADIS ENTITY IDENTIFIED IN THE TITLE BLOCK AND MAY NOT BE REUSED OR ALTERED IN WHOLE OR IN PART WITHOUT THE EXPRESS WRITTEN PERMISSION OF SAME.

THIS BAR REPRESENTS ONE INCH ON THE ORIGINAL DRAWING: USE TO VERIFY FIGURE REPRODUCTION SCALE

Professional Engineer's Name: TIMOTHY E. MILLER
Professional Engineer's No.: 077919-1
State: NY | Date Signed: | Project Mgr.: WTM
Designed by: AMR | Drawn by: KLS | Checked by: TEM/AMR

ARCADIS
ARCADIS OF NEW YORK, INC.

FORMER TAPPAN TERMINAL SITE • HASTINGS ON HUDSON, NEW YORK
GROUNDWATER REMEDIATION SYSTEM

PROCESS FLOW DIAGRAM

GENERAL

ARCADIS Project No. B0046918.0000.00010
Date FEBRUARY 2012
ARCADIS
6723 TOWPATH RD
PO BOX 66
SYRACUSE, NY 13214-0066
TEL: 315.446.9120

2

CITY: SYRACUSE, NY DIV/GROUP:ENV/CADD DB: GMS KFS GMS K.SARTORI PIC:J.VOGELEY PM: W.MCCUNE TM: W.MCCUNE LYR:ON=*;OFF=*REF*
G:\ENVCAD\SYRACUSE\ACT\B0046918\0000\00010\DWG\FINAL_DESIGN\46918D02.dwg LAYOUT: 2 SAVED: 2/10/2012 10:53 AM ACADVER: 18.1S (LMS TECH) PAGESETUP: D2B-PDF PLOTSTYLETABLE: PLTCONT.CTB PLOTTED: 2/10/2012 10:53 AM BY: SARTORI, KATHERINE
XREFS: 46918X00 IMAGES: PROJECTNAME: ---

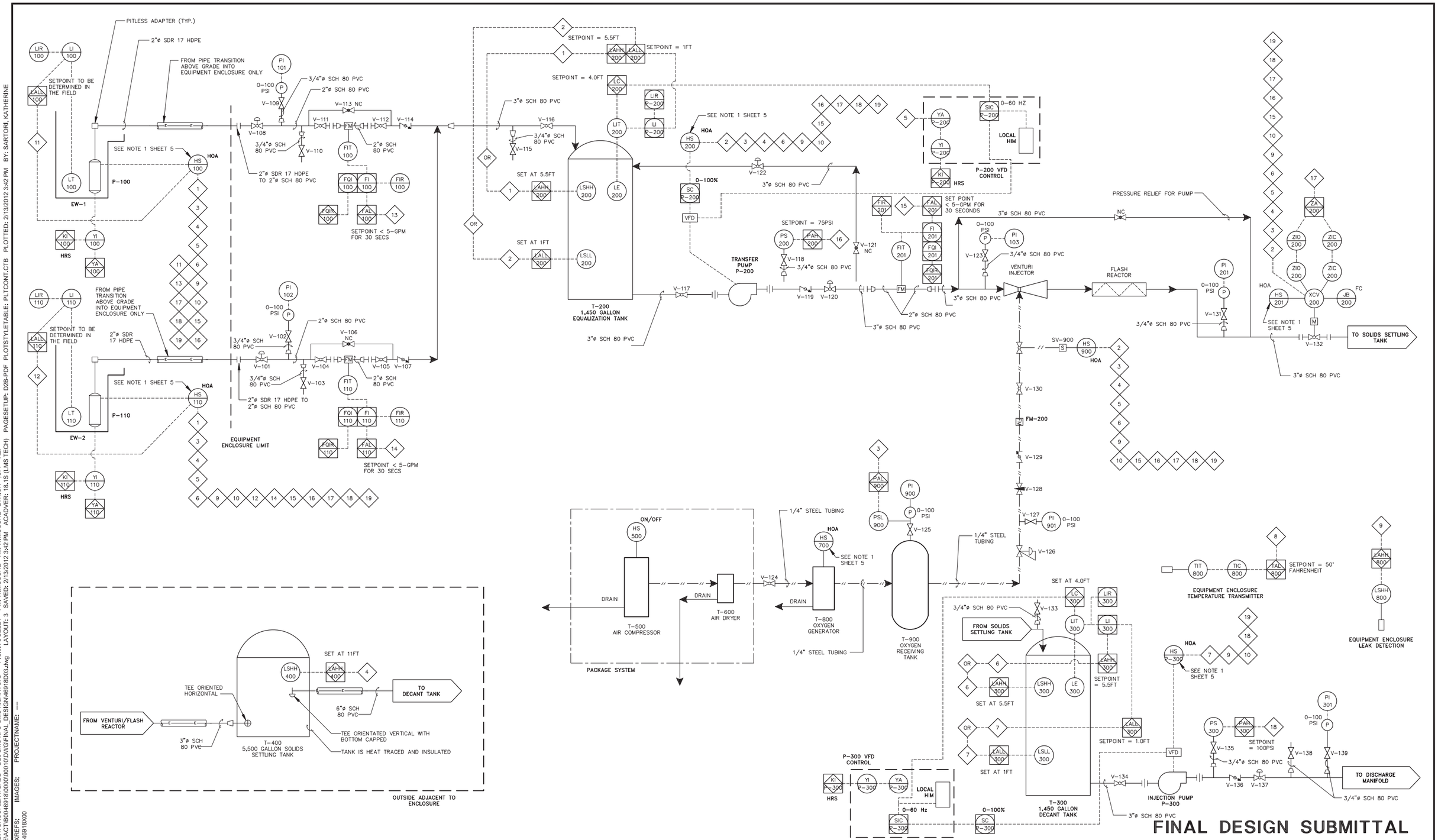

FINAL DESIGN SUBMITTAL

CITY: SYRACUSE, NY DIV/GROUP:ENV/CADD DB: GMS KFS GMS K.SARTORI PIC:J.VOGELEY PM: W.MCCUNE TM: W.MCCUNE LYR:ON=*;OFF=REF* PAGESETUP: D2B-PDF PLOTSTYLETABLE: PLTCONT.CTB PLOTTED: 2/13/2012 3:42 PM BY: SARTORI, KATHERINE
G:\ENVCAD\SYRACUSE\ACT\B0046918\0000\00010\DW\FINAL_DESIGN\46918D03.dwg LAYOUT: 3 SAVED: 2/13/2012 3:42 PM ACADVER: 18.1S (LMS TECH)
XREFS: IMAGES: PROJECTNAME: ---

THIS BAR REPRESENTS ONE INCH ON THE ORIGINAL DRAWING: USE TO VERIFY FIGURE REPRODUCTION SCALE

No.	Date	Revisions	By	Ckd

THIS DRAWING IS THE PROPERTY OF THE ARCADIS ENTITY IDENTIFIED IN THE TITLE BLOCK AND MAY NOT BE REUSED OR ALTERED IN WHOLE OR IN PART WITHOUT THE EXPRESS WRITTEN PERMISSION OF SAME.

Professional Engineer's Name: TIMOTHY E. MILLER
Professional Engineer's No.: 077919-1
State: NY | Date Signed: | Project Mgr.: WTM
Designed by: AMR | Drawn by: KLS | Checked by: TEM/AMR

ARCADIS
ARCADIS OF NEW YORK, INC.

FORMER TAPPAN TERMINAL SITE • HASTINGS ON HUDSON, NEW YORK
GROUNDWATER REMEDIATION SYSTEM

PIPING AND INSTRUMENTATION DIAGRAM (1)

MECHANICAL

ARCADIS Project No. B0046918.0000.00010
Date FEBRUARY 2012

ARCADIS
6723 TOWPATH RD
PO BOX 66
SYRACUSE, NY 13214-0066
TEL. 315.446.9120

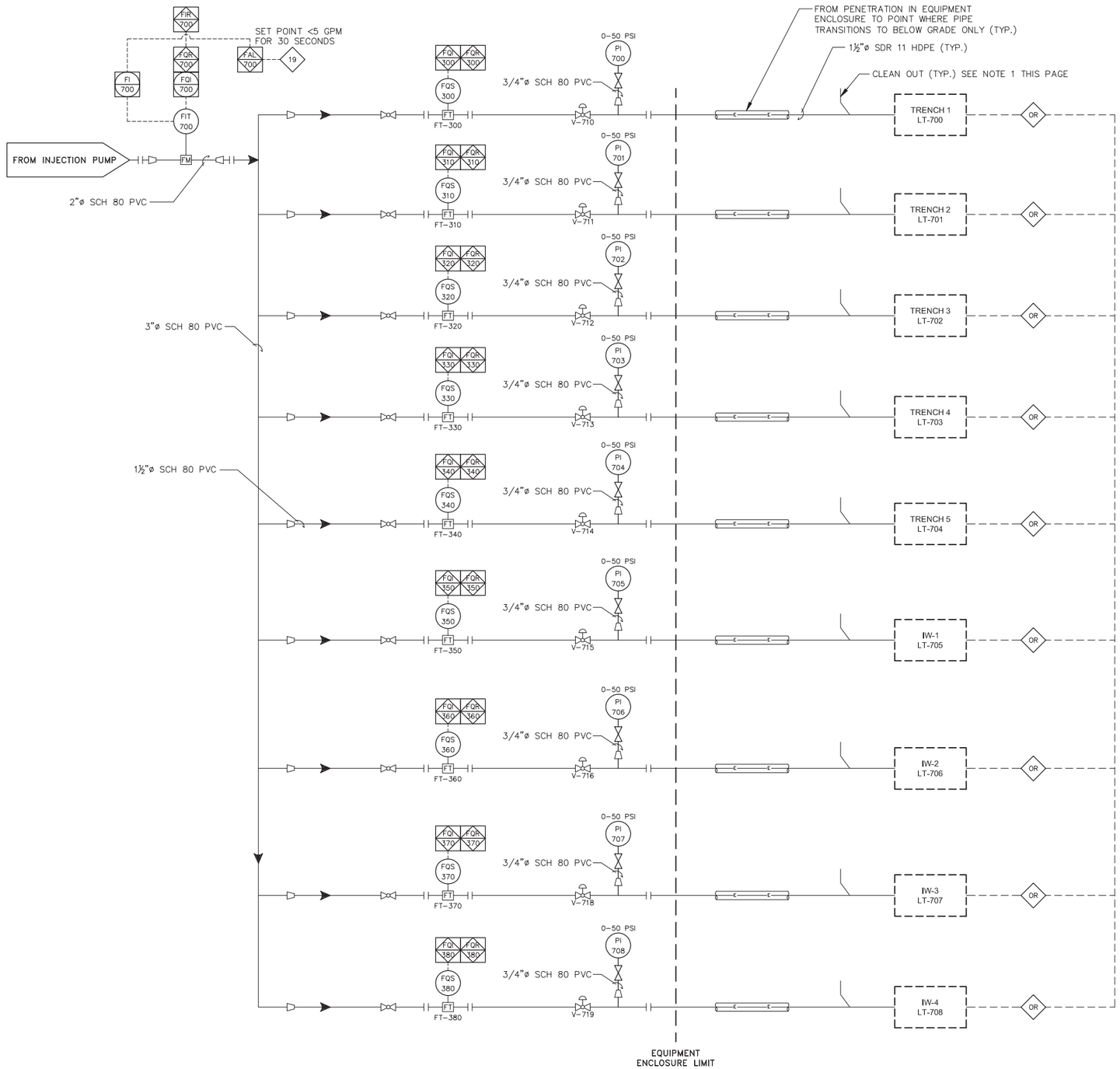

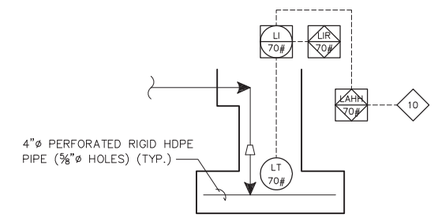

TYPICAL TRENCH DETAIL

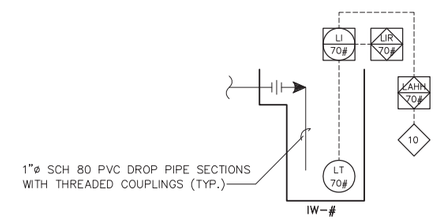

TYPICAL IW DETAIL

NOTE:

1. CLEAN OUTS SHALL BE INSTALLED EVERY 100 FEET ALONG THE 1½"ø SDR 11 HDPE DISCHARGE PIPING TO EACH INJECTION WELL AND INJECTION TRENCH. A MINIMUM OF ONE CLEAN OUT SHALL BE INSTALLED ON EACH DISCHARGE LINE.

FINAL DESIGN SUBMITTAL

CITY: SYRACUSE, NY DIV/GROUP:ENV/CADD DB: GMS KFS GMS K.SARTORI PIC:J.VOGELEY PM: W.MCCUNE TM: W.MCCUNE LYR:ON=*;OFF=*REF* PAGESETUP: D2B-PDF PLOTSTYLETABLE: PLTCONT.CTB PLOTTED: 2/13/2012 3:41 PM BY: SARTORI, KATHERINE
G:\ENVCAD\SYRACUSE\ACT\B0046918\0000\00010\DWG\FINAL_DESIGN\46918D04.dwg LAYOUT: 4 SAVED: 2/13/2012 3:41 PM ACADVER: 18.1S (LMS TECH)
XREFS: 46918X00 IMAGES: PROJECTNAME: ---

THIS BAR REPRESENTS ONE INCH ON THE ORIGINAL DRAWING: USE TO VERIFY FIGURE REPRODUCTION SCALE

No.	Date	Revisions	By	Ckd

THIS DRAWING IS THE PROPERTY OF THE ARCADIS ENTITY IDENTIFIED IN THE TITLE BLOCK AND MAY NOT BE REUSED OR ALTERED IN WHOLE OR IN PART WITHOUT THE EXPRESS WRITTEN PERMISSION OF SAME.

Professional Engineer's Name: TIMOTHY E. MILLER
Professional Engineer's No.: 077919-1
State: NY | Date Signed: | Project Mgr.: WTM
Designed by: AMR | Drawn by: KLS | Checked by: TEM/AMR

ARCADIS
ARCADIS OF NEW YORK, INC.

FORMER TAPPAN TERMINAL SITE • HASTINGS ON HUDSON, NEW YORK
GROUNDWATER REMEDIATION SYSTEM

PIPING AND INSTRUMENTATION DIAGRAM (2)

MECHANICAL

ARCADIS Project No. B0046918.0000.00010
Date: FEBRUARY 2012

ARCADIS
6723 TOWPATH RD
PO BOX 66
SYRACUSE, NY 13214-0066
TEL. 315.446.9120

LEGEND:

- ENCLOSURE/BUILDING LIMITS
- MAIN PROCESS PIPING
- INSTRUMENTATION SIGNAL
- OXYGEN PIPING/TUBING
- SKID MOUNTED OR PACKAGED EQUIPMENT
- BALL VALVE (NC)
- BALL VALVE (NO)
- CHECK VALVE
- SAMPLE TAP
- PI 101 — PRESSURE GAUGE
- GLOBE VALVE
- UNION/COUPLER
- FLANGE CONNECTION
- REDUCER
- FM — FLOW METER
- WELL PUMP
- INSULATION & HEAT TRACING
- SOLENOID VALVE
- NEEDLE VALVE
- PRESSURE REGULATOR
- CENTRIFUGAL PUMP
- FLASH REACTOR
- VENTURI INJECTOR
- PT 100 — FIELD MOUNTED INSTRUMENT
- HS 100 — INSTRUMENT ACCESSIBLE TO OPERATOR/ PRIMARY LOCATION
- LSL 100 — PLC FUNCTION/PRIMARY LOCATION
- LI 100 — SHARED DISPLAY/CONTROL ASSESSABLE TO OPERATOR/PRIMARY LOCATION
- 1 — MAIN PLC INTERLOCK
- FT — FLOW TOTALIZER
- M — MOTORIZED CONTROL VALVE

ABBREVIATIONS:

ø	DIAMETER
EW	EXTRACTION WELL
FAL	FLOW ALARM LOW
FC	FAIL CLOSED
FI	FLOW INDICATOR
FIR	FLOW INDICATING RECORDER
FIT	FLOW INDICATING TRANSMITTER
FM	FLOW METER
FQI	FLOW TOTALIZING INDICATOR
FQR	FLOW TOTAL RECORDER
FQIR	FLOW TOTAL INDICATOR RECORDER
FQS	FLOW TOTAL SWITCH
FT	FLOW TOTALIZER
GPM	GALLONS PER MINUTE
HDPE	HIGH DENSITY POLYETHYLENE
HOA	HAND–OFF–AUTO
HS	HAND SWITCH
IW	INJECTION WELL
JB	BACK–UP BATTERY POWER
KI	PUMP RUN TIME INDICATOR
LAH	LEVEL ALARM HIGH
LAHH	LEVEL ALARM HIGH–HIGH
LALL	LEVEL ALARM LOW–LOW
LC	LEVEL CONTROLLER
LE	LEVEL ELEMENT
LI	LEVEL INDICATOR
LIR	LEVEL INDICATING RECORDER
LIT	LEVEL INDICATING TRANSMITTER
LT	LEVEL TRANSMITTER
LSLL	LEVEL SWITCH LOW LOW
NC	NORMALLY CLOSED
NO	NORMALLY OPEN
PAH	PRESSURE ALARM HIGH
PI	PRESSURE INDICATOR
PLC	PROGRAMMABLE LOGIC CONTROLLER
PSI	PRESSURE PER SQUARE INCH
PVC	POLYVINYL CHLORIDE
SIC	SPEED INDICATING CONTROLLER
SC	SPEED CONTROLLER
SCH	SCHEDULE
SDR	STANDARD DIMENSION RATIO
SIC	SPEED INDICATING CONTROLLER
SV	SOLENOID VALVE
TAL	TEMPERATURE ALARM LOW
TIC	TEMPERATURE INDICATING CONTROLLER
TIT	TEMPERATURE INDICATING TRANSMITTER
TYP	TYPICAL
VFD	VARIABLE FREQUENCY DRIVE
XCV	MOTORIZED CONTROL VAVLE
YA	RUN ALARM
YI	RUN INDICATION
ZA	POSITION ALARM
ZIC	POSITION INDICATOR CLOSED
ZIO	POSITION INDICATOR OPEN
ZSC	POSITION CLOSED
ZSO	POSITION OPEN

NOTE:

1. HAND/OFF/AUTO (HOA) SHALL BE CONTROLLED FROM LOCAL CONTROL PANEL HMI. HOA SHALL BE A VIRTUAL SWITCH ON THE HMI TOUCH SCREEN.

INTERLOCK SCHEDULE:

1. T–200 HIGH HIGH LEVEL ALARM (LAHH–200)
   DISABLE EXTRACTION WELL PUMP P–100
   DISABLE EXTRACTION WELL PUMP P–110
   ALARM AT PLC

2. T–200 LOW LOW LEVEL ALARM (LALL–200)
   DISABLE TRANSFER PUMP P–200
   CLOSE VALVE SV–900
   CLOSE VAVLE XCV–200
   ALARM AT PLC

3. T–900 LOW PRESSURE ALARM (PAL–900)
   DISABLE TRANSFER PUMP P–200
   DISABLE EXTRACTION WELL PUMP P–100
   DISABLE EXTRACTION WELL PUMP P–110
   CLOSE VALVE SV–900
   CLOSE VAVLE XCV–200
   ALARM AT PLC

4. T–400 HIGH HIGH LEVEL ALARM (LAHH–400)
   DISABLE TRANSFER PUMP P–200
   DISABLE EXTRACTION WELL PUMP P–100
   DISABLE EXTRACTION WELL PUMP P–110
   CLOSE VALVE SV–900
   CLOSE VAVLE XCV–200
   ALARM AT PLC

5. P–200 AUXILIARY CONTACT FAILURE (YA–P–200)
   DISABLE EXTRACTION WELL PUMP P–100
   DISABLE EXTRACTION WELL PUMP P–110
   CLOSE VALVE SV–900
   CLOSE VAVLE XCV–200
   ALARM AT PLC

6. T–300 HIGH HIGH LEVEL ALARM (LAHH–300)
   DISABLE TRANSFER PUMP P–200
   DISABLE EXTRACTION WELL PUMP P–100
   DISABLE EXTRACTION WELL PUMP P–110
   CLOSE VALVE SV–900
   CLOSE VAVLE XCV–200
   ALARM AT PLC

7. T–300 LOW LOW LEVEL ALARM (LALL–300)
   DISABLE INJECTION PUMP P–300

8. EQUIPMENT ENCLOSURE LOW TEMPERATURE ALARM (TAL–800)
   ALARM AT PLC

9. EQUIPMENT ENCLOSURE LEAK DETECTION ALARM (LAHH–800)
   DISABLE TRANSFER PUMP P–200
   DISABLE EXTRACTION WELL PUMP P–100
   DISABLE EXTRACTION WELL PUMP P–110
   DISABLE INJECTION PUMP P–300
   CLOSE VALVE SV–900
   CLOSE VAVLE XCV–200
   ALARM AT PLC

10. TRENCH AND INJECTION WELL HIGH HIGH LEVEL ALARM (LAHH–700, 701, 702, 703, 704, 705, 706, 707, 708)
    DISABLE TRANSFER PUMP P–200
    DISABLE EXTRACTION WELL PUMP P–100
    DISABLE EXTRACTION WELL PUMP P–110
    DISABLE INJECTION PUMP P–300
    CLOSE VALVE SV–900
    CLOSE VAVLE XCV–200
    ALARM AT PLC

11. EW–1 LOW LOW LEVEL ALARM (LALL–100)
    DISABLE EXTRACTION WELL PUMP P–100
    ALARM AT PLC

12. EW–2 LOW LOW LEVEL ALARM (LALL–110)
    DISABLE EXTRACTION WELL PUMP P–110
    ALARM AT PLC

13. FIT–100 LOW FLOW ALARM (FAL–100)
    CONTROL DESCRIPTION: IF THE FLOW RATE IS LESS THEN 5 GPM FOR 30 SECONDS
    DISABLE EXTRACTION WELL PUMP P–100
    ALARM AT PLC

14. FIT–110 LOW FLOW ALARM (FAL–110)
    CONTROL DESCRIPTION: IF THE FLOW RATE IS LESS THEN 5 GPM FOR 30 SECONDS
    DISABLE EXTRACTION WELL PUMP P–110
    ALARM AT PLC

15. FIT–201 LOW FLOW ALARM (FAL–201)
    CONTROL DESCRIPTION: IF THE FLOW RATE IS LESS THAN 5 GPM FOR 30 SECONDS
    DISABLE TRANSFER PUMP P–200
    DISABLE EXTRACTION WELL PUMP P–100
    DISABLE EXTRACTION WELL PUMP P–110
    CLOSE VALVE SV–900
    CLOSE VALVE XCV–200
    ALARM AT PLC

16. TRANSFER PUMP P–200 DISCHARGE, HIGH PRESSURE ALARM (PAH 200)
    SET POINT: 75 PSI
    DISABLE TRANSFER PUMP P–200
    DISABLE EXTRACTION WELL PUMP P–100
    DISABLE EXTRACTION WELL PUMP P–110
    CLOSE VALVE SV–900
    CLOSE VALVE XCV–200
    ALARM AT PLC

17. SOLIDS SETTLING TANK INFLUENT MOTORIZED VALVE (XCV–200)
    DISCARD ALARM, VALVE FAILED TO OPEN OR CLOSE (ZA–200)
    DISABLE TRANSFER PUMP P–200
    DISABLE EXTRACTION WELL PUMP P–100
    DISABLE EXTRACTION WELL PUMP P–110
    CLOSE VALVE SV–900
    CLOSE VALVE XCV–200
    ALARM AT PLC

18. INJECTION PUMP P–300 DISCHARGE, HIGH PRESSURE ALARM (PAH–300)
    SET POINT: 100 PSI
    DISABLE INJECTION PUMP P–300
    DISABLE TRANSFER PUMP P–200
    DISABLE EXTRACTION WELL PUMP P–100
    DISABLE EXTRACTION WELL PUMP P–110
    CLOSE VALVE SV–900
    CLOSE VALVE XCV–200
    ALARM AT PLC

19. FIT–700 LOW FLOW ALARM (FAL–700)
    CONTROL DESCRIPTION: IF THE FLOW RATE IS LESS THAN 5 GPM FOR 30 SECONDS
    DISABLE INJECTION PUMP P–300
    DISABLE TRANSFER PUMP P–200
    DISABLE EXTRACTION WELL PUMP P–100
    DISABLE EXTRACTION WELL PUMP P–110
    CLOSE VALVE SV–900
    CLOSE VALVE XCV–200
    ALARM AT PLC

FINAL DESIGN SUBMITTAL

CITY: SYRACUSE, NY DIV/GROUP:ENV/CADD DB: GMS KFS GMS K.SARTORI PIC:J.VOGELEY PM: W.MCCUNE TM: W.MCCUNE LYR:ON=*;OFF=REF*
G:\ENVCAD\SYRACUSE\ACT\B0046918\0000\00010\DWG\FINAL_DESIGN\46918D05.dwg LAYOUT: 5 SAVED: 2/10/2012 10:53 AM ACADVER: 18.1S (LMS TECH) PAGESETUP: D2B-PDF PLOTSTYLETABLE: PLTCONT.CTB PLOTTED: 2/10/2012 10:53 AM BY: SARTORI, KATHERINE
XREFS: 46918X00 IMAGES: PROJECTNAME: ---

THIS BAR REPRESENTS ONE INCH ON THE ORIGINAL DRAWING: USE TO VERIFY FIGURE REPRODUCTION SCALE

No.	Date	Revisions	By	Ckd

THIS DRAWING IS THE PROPERTY OF THE ARCADIS ENTITY IDENTIFIED IN THE TITLE BLOCK AND MAY NOT BE REUSED OR ALTERED IN WHOLE OR IN PART WITHOUT THE EXPRESS WRITTEN PERMISSION OF SAME.

Professional Engineer's Name: TIMOTHY E. MILLER
Professional Engineer's No.: 077919-1
State: NY | Date Signed: | Project Mgr.: WTM
Designed by: AMR | Drawn by: KLS | Checked by: TEM/AMR

ARCADIS
ARCADIS OF NEW YORK, INC.

FORMER TAPPAN TERMINAL SITE • HASTINGS ON HUDSON, NEW YORK
GROUNDWATER REMEDIATION SYSTEM

LEGEND, ABBREVIATIONS AND INTERLOCK SCHEDULE

MECHANICAL

ARCADIS Project No. B0046918.0000.00010
Date: FEBRUARY 2012

ARCADIS
6723 TOWPATH RD
PO BOX 66
SYRACUSE, NY 13214-0066
TEL. 315.446.9120

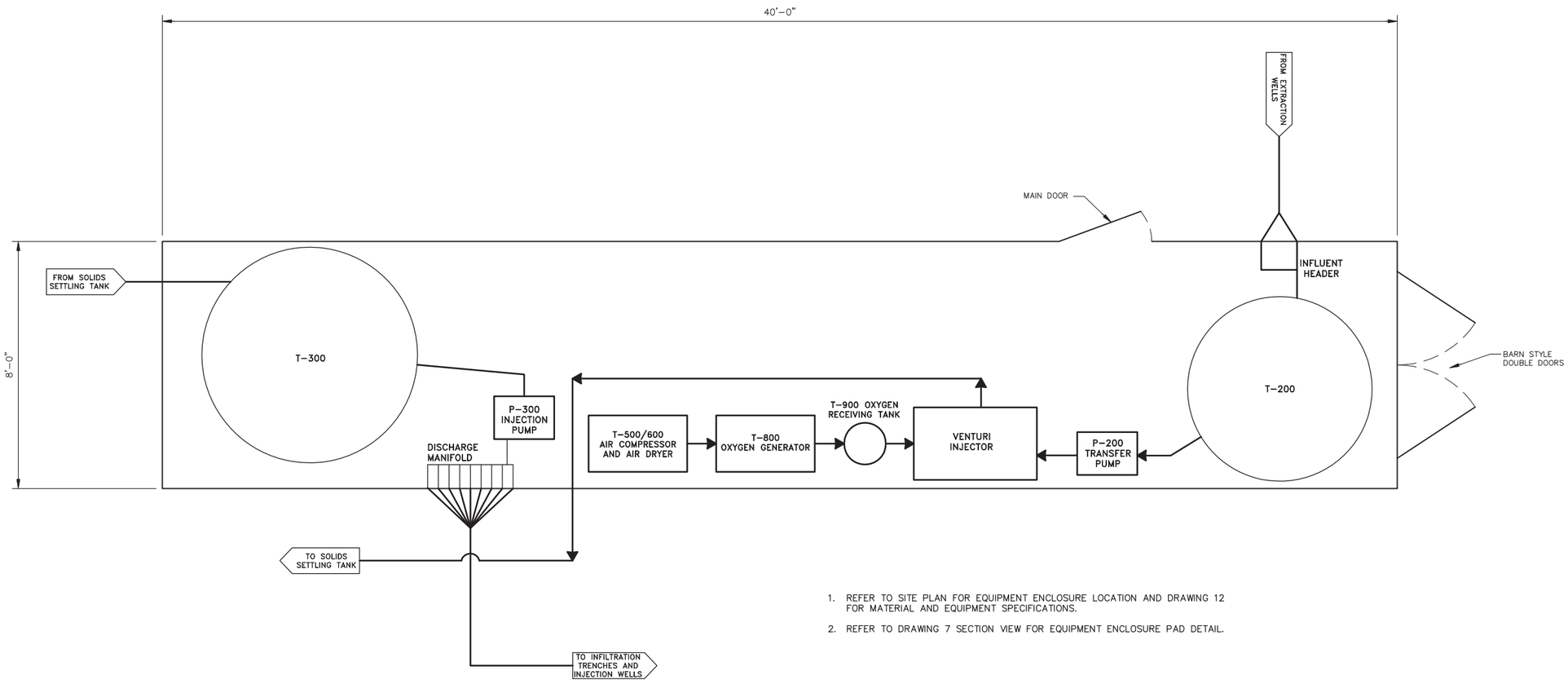

1. REFER TO SITE PLAN FOR EQUIPMENT ENCLOSURE LOCATION AND DRAWING 12 FOR MATERIAL AND EQUIPMENT SPECIFICATIONS.
2. REFER TO DRAWING 7 SECTION VIEW FOR EQUIPMENT ENCLOSURE PAD DETAIL.

FINAL DESIGN SUBMITTAL

NOT TO SCALE

THIS BAR REPRESENTS ONE INCH ON THE ORIGINAL DRAWING: USE TO VERIFY FIGURE REPRODUCTION SCALE

No.	Date	Revisions	By	Ckd

THIS DRAWING IS THE PROPERTY OF THE ARCADIS ENTITY IDENTIFIED IN THE TITLE BLOCK AND MAY NOT BE REUSED OR ALTERED IN WHOLE OR IN PART WITHOUT THE EXPRESS WRITTEN PERMISSION OF SAME.

Professional Engineer's Name: TIMOTHY E. MILLER
Professional Engineer's No.: 077919-1
State: NY | Date Signed: | Project Mgr.: WTM
Designed by: AMR | Drawn by: KLS | Checked by: TEM/AMR

ARCADIS
ARCADIS OF NEW YORK, INC.

FORMER TAPPAN TERMINAL SITE • HASTINGS ON HUDSON, NEW YORK
GROUNDWATER REMEDIATION SYSTEM

EQUIPMENT LAYOUT

MECHANICAL

ARCADIS Project No. B0046918.0000.00010
Date FEBRUARY 2012

ARCADIS
6723 TOWPATH RD
PO BOX 66
SYRACUSE, NY 13214-0066
TEL. 315.446.9120

6

CITY: SYRACUSE, NY DIV/GROUP: ENV/CADD DB: GMS KFS GMS K.SARTORI PIC: J.VOGELEY PM: W.MCCUNE TM: W.MCCUNE LYR:ON=*;OFF=*REF* G:\ENVCAD\SYRACUSE\ACT\B0046918\0000\00010\DWG\FINAL_DESIGN\46918G06.dwg LAYOUT: 6 SAVED: 2/10/2012 10:59 AM ACADVER: 18.1S (LMS TECH) PAGESETUP: D2B-PDF PLOTSTYLETABLE: PLTCONT.CTB PLOTTED: 2/10/2012 11:00 AM BY: SARTORI, KATHERINE
XREFS: 46918X00 46918X02 IMAGES: PROJECTNAME: —

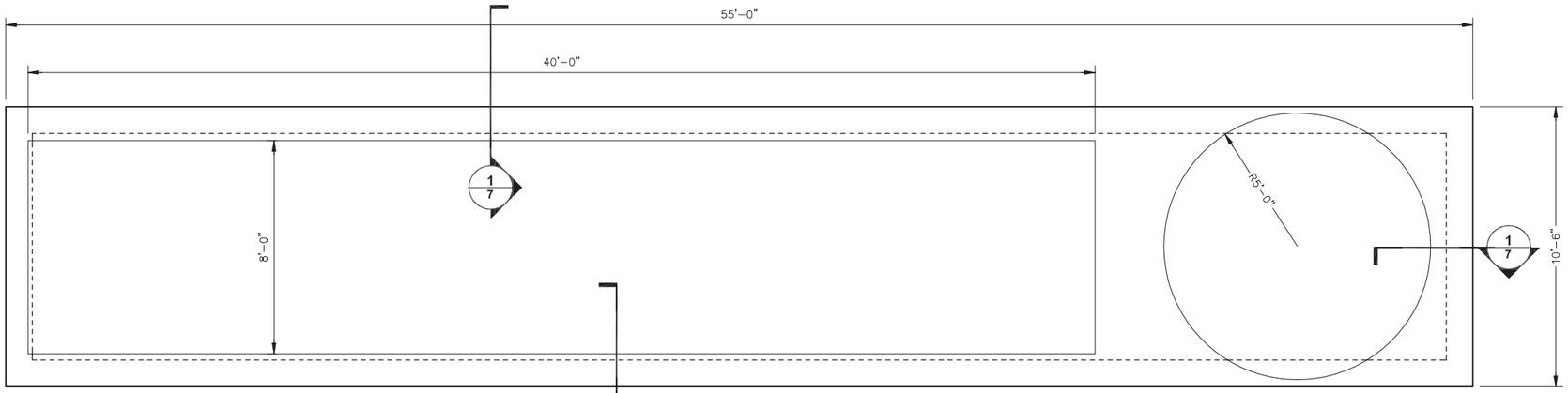

PLAN

CONCRETE PAD DESIGN

0 2' 5'
SCALE: 3/8"=1'-0"

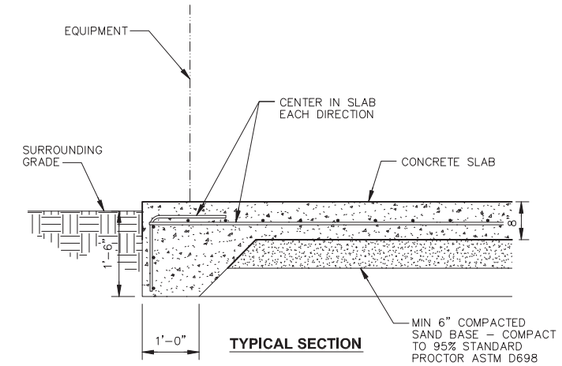

TYPICAL SECTION

CONCRETE PAD DETAIL (1)

0 1' 2'
SCALE: 3/4"=1'-0"

NOTE:

1. REFER TO DETAIL 2 SOLID SETTLING TANK ANCHOR DETAIL FOR TANK ANCHORAGE SPECIFICATIONS AND MATERIALS.

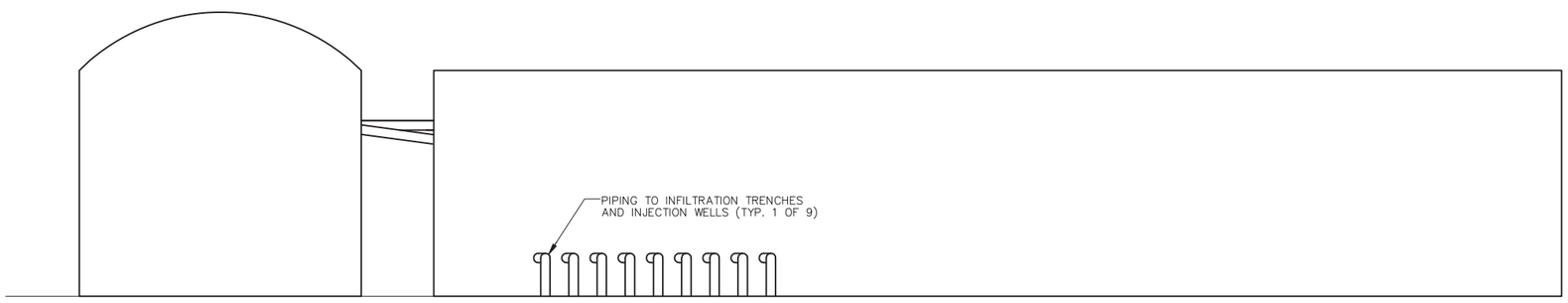

ELEVATION DETAIL (EAST SIDE)

0 2' 5'
SCALE: 3/8"=1'-0"

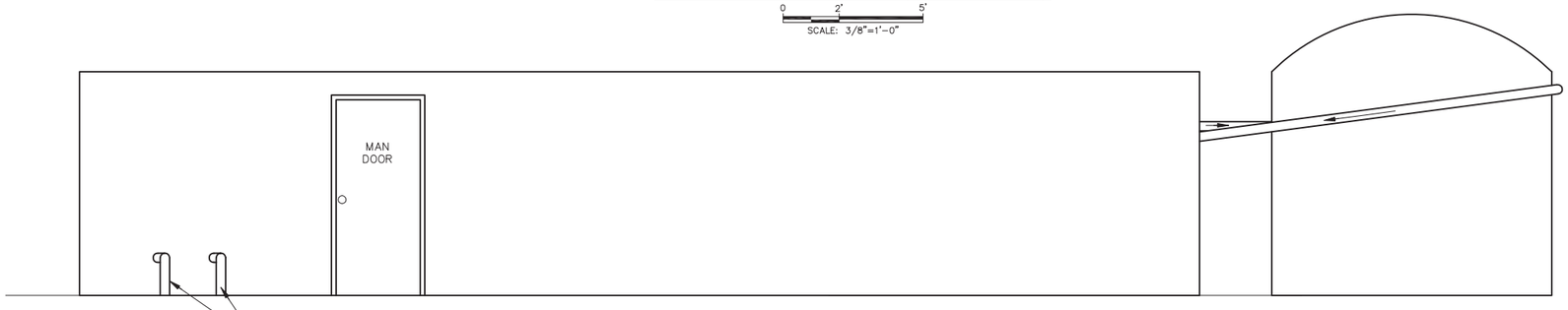

ELEVATION DETAIL (WEST SIDE)

0 2' 5'
SCALE: 3/8"=1'-0"

NOTE:

1. REFER TO DETAIL 2 SOLID SETTLING TANK ANCHOR DETAIL FOR TANK ANCHORAGE SPECIFICATIONS AND MATERIALS.

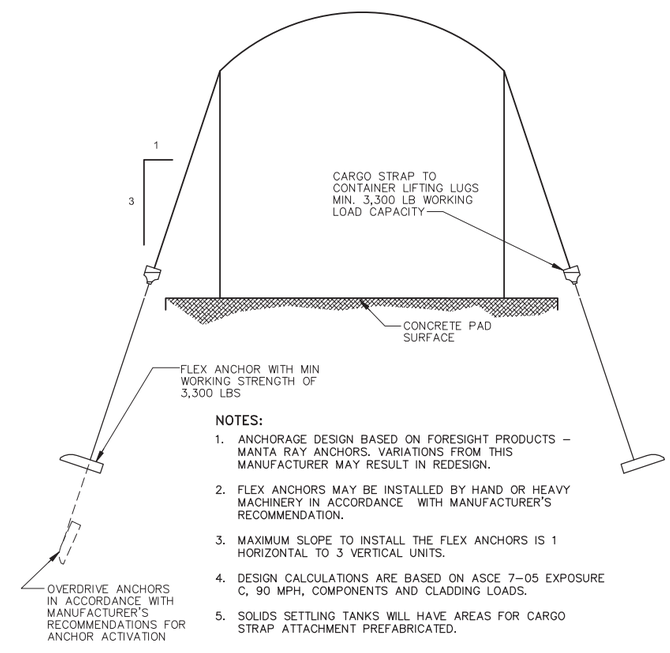

NOTES:

1. ANCHORAGE DESIGN BASED ON FORESIGHT PRODUCTS – MANTA RAY ANCHORS. VARIATIONS FROM THIS MANUFACTURER MAY RESULT IN REDESIGN.
2. FLEX ANCHORS MAY BE INSTALLED BY HAND OR HEAVY MACHINERY IN ACCORDANCE WITH MANUFACTURER'S RECOMMENDATION.
3. MAXIMUM SLOPE TO INSTALL THE FLEX ANCHORS IS 1 HORIZONTAL TO 3 VERTICAL UNITS.
4. DESIGN CALCULATIONS ARE BASED ON ASCE 7–05 EXPOSURE C, 90 MPH, COMPONENTS AND CLADDING LOADS.
5. SOLIDS SETTLING TANKS WILL HAVE AREAS FOR CARGO STRAP ATTACHMENT PREFABRICATED.

SOLIDS SETTLING TANK ANCHOR DETAIL (2)

NOT TO SCALE

FINAL DESIGN SUBMITTAL

SCALE AS INDICATED

THIS BAR REPRESENTS ONE INCH ON THE ORIGINAL DRAWING: USE TO VERIFY FIGURE REPRODUCTION SCALE

No.	Date	Revisions	By	Ckd

THIS DRAWING IS THE PROPERTY OF THE ARCADIS ENTITY IDENTIFIED IN THE TITLE BLOCK AND MAY NOT BE REUSED OR ALTERED IN WHOLE OR IN PART WITHOUT THE EXPRESS WRITTEN PERMISSION OF SAME.

Professional Engineer's Name: TIMOTHY E. MILLER
Professional Engineer's No.: 077919-1

State	Date Signed	Project Mgr.
NY		WTM
Designed by AMR	Drawn by KLS	Checked by TEM/AMR

ARCADIS
ARCADIS OF NEW YORK, INC.

FORMER TAPPAN TERMINAL SITE • HASTINGS ON HUDSON, NEW YORK
GROUNDWATER REMEDIATION SYSTEM

MISCELLANEOUS DETAILS AND SECTIONS (1)

MECHANICAL

ARCADIS Project No. B0046918.0000.00010
Date FEBRUARY 2012

ARCADIS
6723 TOWPATH RD
PO BOX 66
SYRACUSE, NY 13214-0066
TEL. 315.446.9120

7

CITY: SYRACUSE, NY DIV/GROUP:ENV/CADD DB: GMS KFS GMS K.SARTORI PIC: J.VOGELEY PM: W.MCCUNE TM: W.MCCUNE LYR:ON=*;OFF=*REF* PAGESETUP: D2B-PDF PLOTSTYLETABLE: PLTCONT.CTB PLOTTED: 2/10/2012 10:59 AM BY: SARTORI, KATHERINE
G:\ENVCAD\SYRACUSE\ACT\B0046918\0000\00010\DWG\FINAL_DESIGN\46918G07.dwg LAYOUT: 7 SAVED: 2/7/2012 10:25 AM ACADVER: 18.1S (LMS TECH)
XREFS: 46918X00 IMAGES: PROJECTNAME: ---

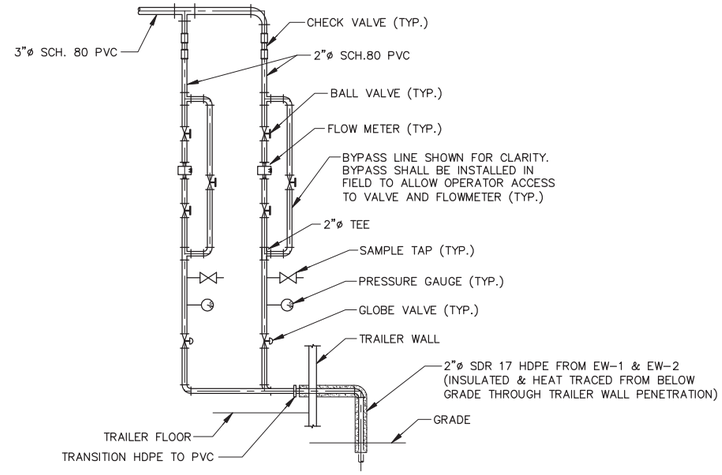

INFLUENT PIPE PROFILE (2)

0 2' 5'
SCALE: 3/8"=1'-0"

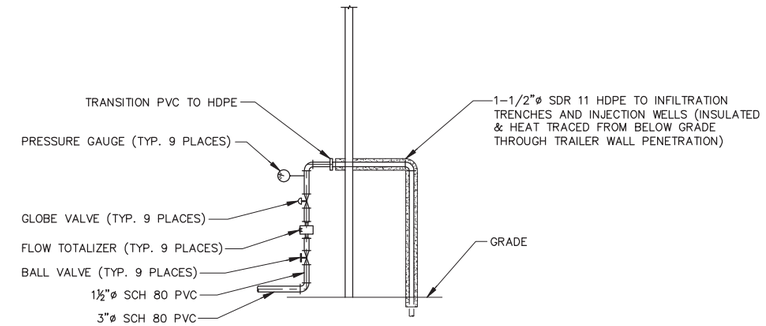

DISCHARGE MANIFOLD PROFILE (5)

0 2' 5'
SCALE: 3/8"=1'-0"

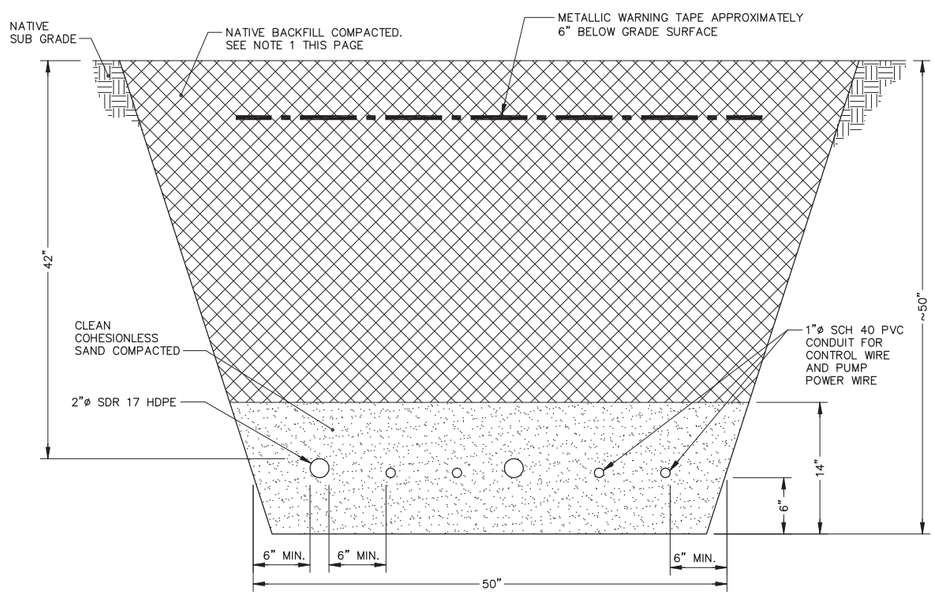

EXTRACTION WELL PIPE TRENCH DETAIL SECTION A (3)

0 6" 1'
SCALE: 1 1/2"=1'-0"

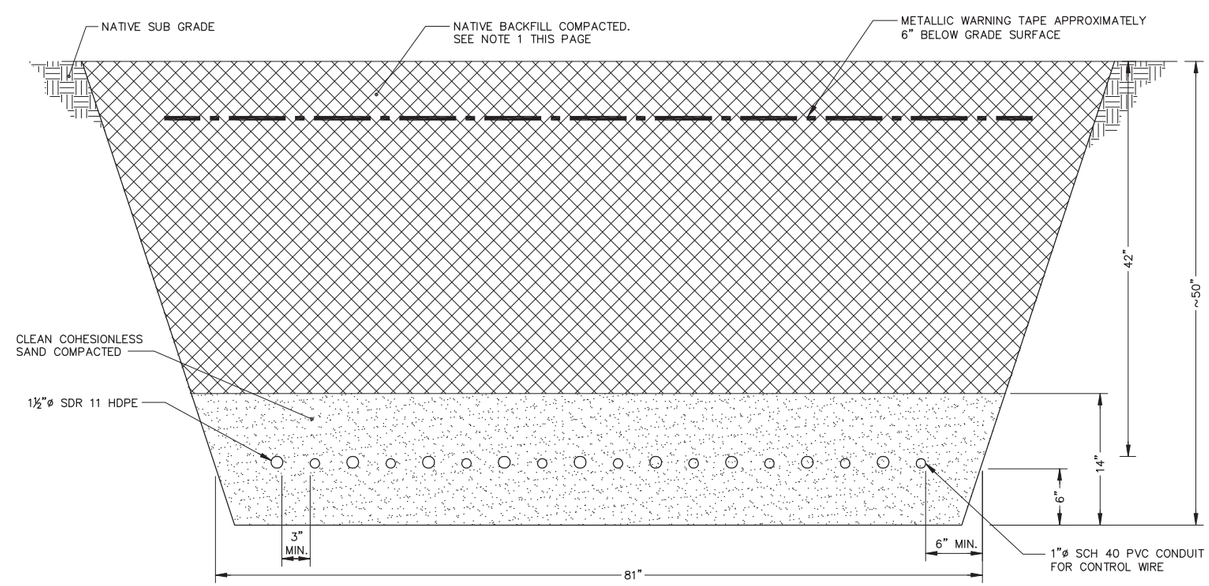

INFILTRATION TRENCH AND INJECTION WELL PIPE TRENCH DETAIL SECTION B (4)

0 6" 1'
SCALE: 1 1/2"=1'-0"

NOTE:

1. THE USE OF EXCAVATED MATERIALS AS BACKFILL IS SUBJECT TO ARCADIS APPROVAL AND SOIL SAMPLING RESULTS. BASED ON SOIL SAMPLING RESULTS, AN ALTERNATIVE BACKFILL SOURCE MAY BE REQUIRED. REFER TO GENERAL CONSTRUCTION NOTE 24 ON DRAWING 1.

FINAL DESIGN SUBMITTAL

SCALE AS INDICATED

THIS BAR REPRESENTS ONE INCH ON THE ORIGINAL DRAWING: USE TO VERIFY FIGURE REPRODUCTION SCALE

No.	Date	Revisions	By	Ckd

THIS DRAWING IS THE PROPERTY OF THE ARCADIS ENTITY IDENTIFIED IN THE TITLE BLOCK AND MAY NOT BE REUSED OR ALTERED IN WHOLE OR IN PART WITHOUT THE EXPRESS WRITTEN PERMISSION OF SAME.

Professional Engineer's Name: TIMOTHY E. MILLER
Professional Engineer's No.: 077919-1

State	Date Signed	Project Mgr.
NY		WTM
Designed by AMR	Drawn by KLS	Checked by TEM/AMR

ARCADIS
ARCADIS OF NEW YORK, INC.

FORMER TAPPAN TERMINAL SITE • HASTINGS ON HUDSON, NEW YORK
GROUNDWATER REMEDIATION SYSTEM

MISCELLANEOUS DETAILS AND SECTIONS (2)

MECHANICAL

ARCADIS Project No. B0046918.0000.00010
Date FEBRUARY 2012

ARCADIS
6723 TOWPATH RD
PO BOX 66
SYRACUSE, NY 13214-0066
TEL. 315.446.9120

8

CITY: SYRACUSE, NY DIV/GROUP: ENV/CADD DB: GMS KFS GMS K.SARTORI PIC: J.VOGELEY PM: W.MCCUNE TM: W.MCCUNE LYR:ON=*;OFF=*REF*
G:\ENVCAD\SYRACUSE\ACT\B0046918\0000\00010\DWG\FINAL_DESIGN\46918G08.dwg LAYOUT: 8 SAVED: 2/10/2012 10:59 AM ACADVER: 18.1S (LMS TECH) PAGESETUP: D2B-PDF PLOTSTYLETABLE: PLTCONT.CTB PLOTTED: 2/10/2012 10:59 AM BY: SARTORI, KATHERINE
XREFS: 46918X00 IMAGES: PROJECTNAME: ---

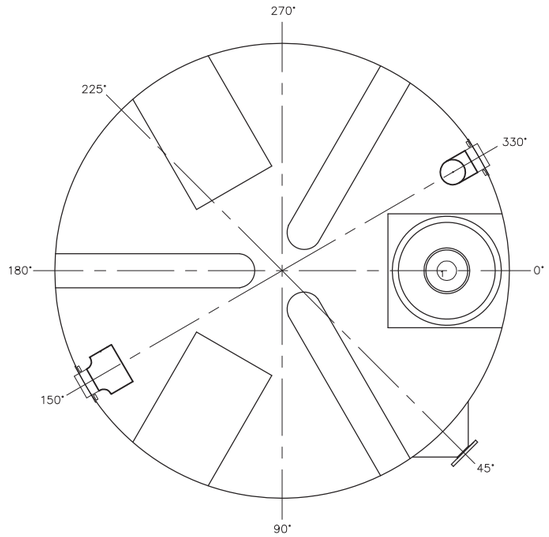

PLAN

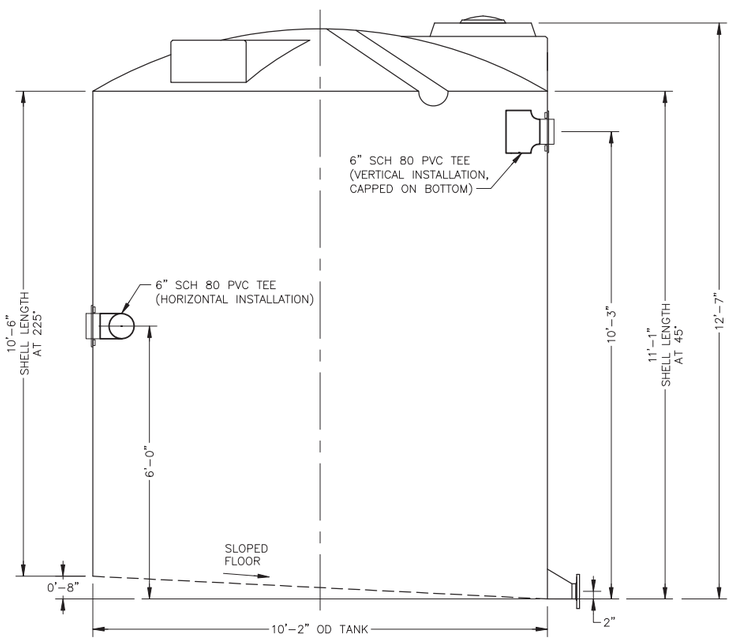

SECTION

SOLIDS SETTLING TANK (1)

NOT TO SCALE

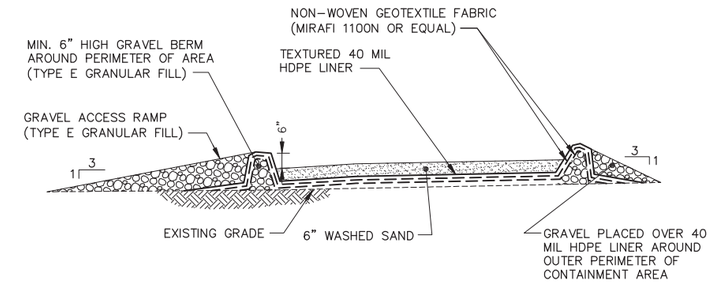

CONTAINMENT SECTION

TYPICAL CONTAINMENT AREA DETAIL (2)

NOT TO SCALE

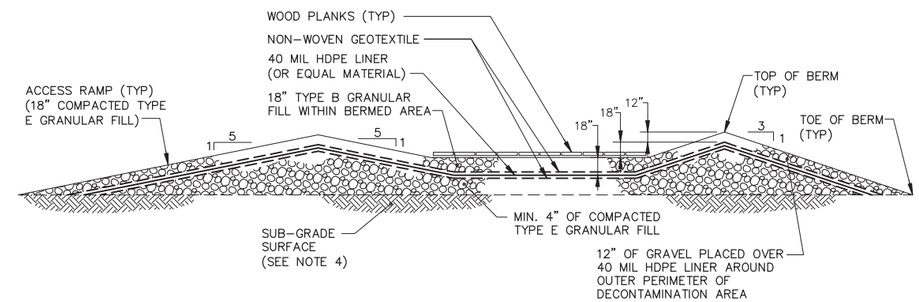

SECTION

DECONTAMINATION AREA (3)

NOT TO SCALE

NOTES:

1. CONTAINMENT AND DECONTAMINATION AREA TO BE SLOPED (INCLUDES HDPE LINER) TOWARD A COLLECTION SUMP TO FACILITATE COLLECTION AND REMOVAL OF LIQUIDS. LIQUIDS SHALL BE PUMPED FROM COLLECTION SUMP TO A HOLDING TANK.
2. UPON COMPLETION OF CONSTRUCTION ACTIVITIES, THE CONTAINMENT AND DECONTAMINATION AREAS, INCLUDING GEOSYNTHETICS, SHALL BE REMOVED BY THE CONTRACTOR FOR OFFSITE DISPOSAL.
3. SUB-GRADE SURFACE SHALL BE UNIFORM AND FREE OF DELETERIOUS MATERIALS (E.G., SHARP STONES, WOODY DEBRIS, CONSTRUCTION DEBRIS) THAT COULD DAMAGE THE HDPE LINER.
4. COMPACTION OF GRANULAR FILL MATERIAL SHALL BE SUFFICIENT DENSITY TO PROVIDE A FIRM AND UNIFORM SURFACE. COMPACTION OF FILL MATERIAL ABOVE GEOSYNTHETICS TO BE PERFORMED IN A MANNER AND USING APPROPRIATE EQUIPMENT THAT AVOIDS DAMAGING THE GEOSYNTHETICS.
5. TRUCKS OR OTHER EQUIPMENT THAT COULD DAMAGE THE HDPE LINER WILL NOT BE ALLOWED WITHIN THE SITE CONTAINMENT AREAS.
6. CONTAINMENT AREA/STOCKPILED MATERIAL AND DECONTAMINATION AREAS SHALL BE KEPT COVERED WHEN NOT IN USE TO PREVENT RAIN WATER INFILTRATION AND MATERIAL RUN OFF.
7. THE NUMBER OF CONTAINMENT AREAS NEEDED ON SITE IS DEPENDENT UPON THE AMOUNT OF MATERIAL THAT WILL NEED TO BE STOCKPILED (BASED UPON SOIL ANALYSIS RESULTS). IT IS ANTICIPATED THAT ONE DECONTAMINATION AREA WILL BE REQUIRED.
8. THE MOST EFFECTIVE LOCATION OF CONTAINMENT AND DECONTAMINATION AREAS IS TO BE DETERMINED IN THE FIELD.

FINAL DESIGN SUBMITTAL

NOT TO SCALE

THIS BAR REPRESENTS ONE INCH ON THE ORIGINAL DRAWING: USE TO VERIFY FIGURE REPRODUCTION SCALE

No.	Date	Revisions	By	Ckd

THIS DRAWING IS THE PROPERTY OF THE ARCADIS ENTITY IDENTIFIED IN THE TITLE BLOCK AND MAY NOT BE REUSED OR ALTERED IN WHOLE OR IN PART WITHOUT THE EXPRESS WRITTEN PERMISSION OF SAME.

Professional Engineer's Name: TIMOTHY E. MILLER
Professional Engineer's No.: 077919-1
State: NY | Date Signed: | Project Mgr.: WTM
Designed by: AMR | Drawn by: KLS | Checked by: TEM/AMR

ARCADIS
ARCADIS OF NEW YORK, INC.

FORMER TAPPAN TERMINAL SITE • HASTINGS ON HUDSON, NEW YORK
GROUNDWATER REMEDIATION SYSTEM

MISCELLANEOUS DETAILS AND SECTIONS (3)

MECHANICAL

ARCADIS Project No. B0046918.0000.00010
Date FEBRUARY 2012

ARCADIS
6723 TOWPATH RD
PO BOX 66
SYRACUSE, NY 13214-0066
TEL. 315.446.9120

CITY: SYRACUSE, NY DIV/GROUP: ENV/CADD DB: GMS KFS GMS K.SARTORI PIC: J.VOGELEY PM: W.MCCUNE TM: W.MCCUNE LYR: ON=*;OFF=*REF*
G:\ENVCAD\SYRACUSE\ACT\B0046918\0000\00010\DWG\FINAL_DESIGN\46918G09.dwg LAYOUT: 9 SAVED: 2/10/2012 10:58 AM ACADVER: 18.1S (LMS TECH) PAGESETUP: D2B-PDF PLOTSTYLETABLE: PLTCONT.CTB PLOTTED: 2/10/2012 10:58 AM BY: SARTORI, KATHERINE
XREFS: 46918X00 IMAGES: PROJECTNAME: ---

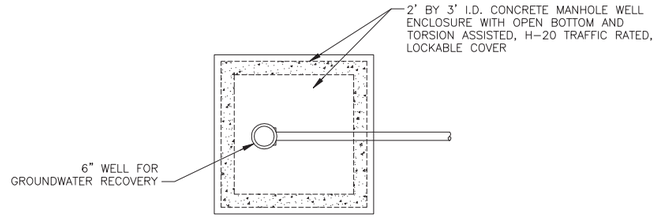

PLAN

NOT TO SCALE

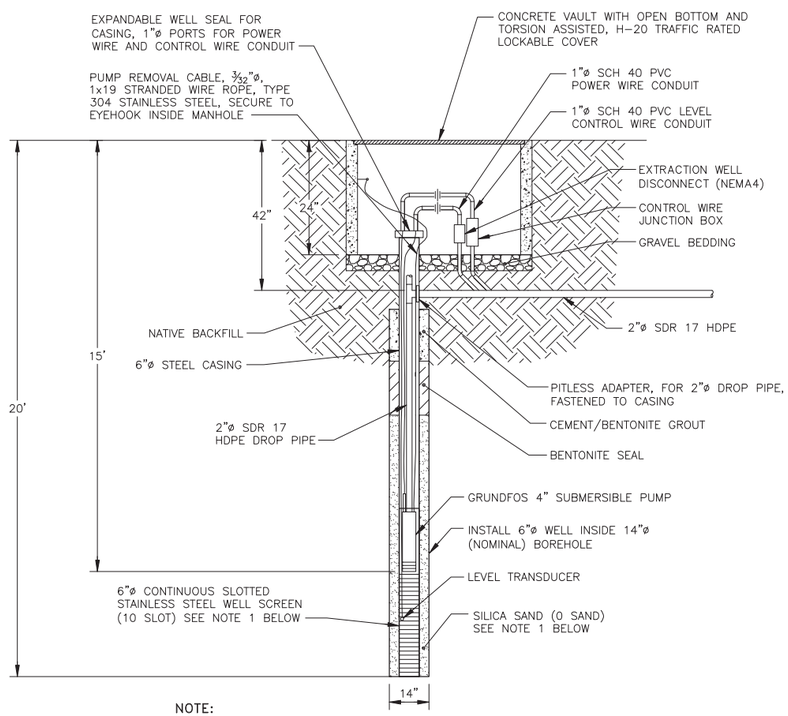

NOTE:

1. THE WELL SCREEN SLOT SIZE AND TYPE OF SILICA SAND THAT WILL BE INSTALLED DURING WELL CONSTRUCTION IS SUBJECT TO CHANGE DEPENDING UPON THE SUBSURFACE DATA COLLECTED DURING PILOT BORING TESTING.

EXTRACTION WELL CONSTRUCTION DETAIL 1

NOT TO SCALE

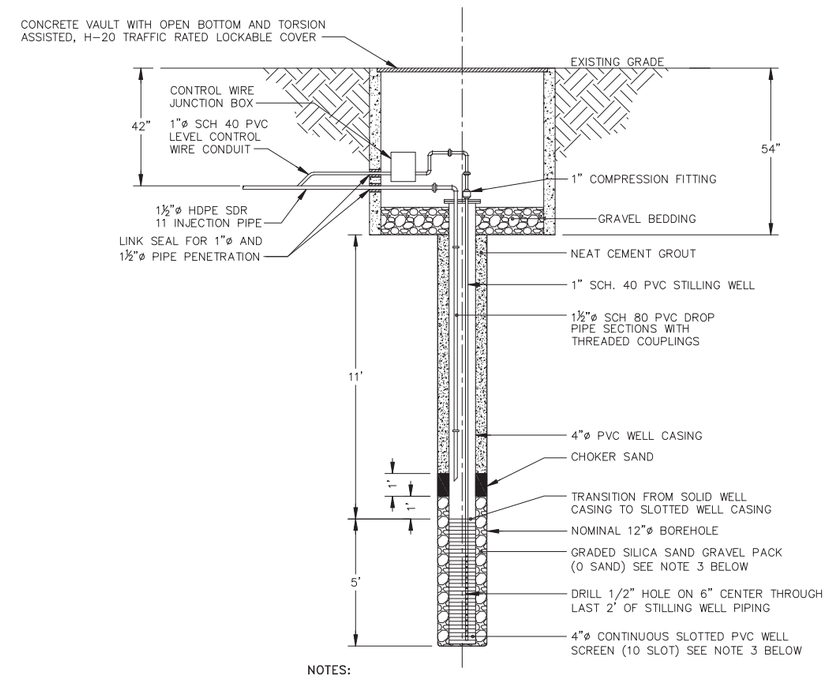

NOTES:

1. INJECTION WELL LEVEL TRANSDUCER TO BE INSTALLED IN 1" SCH. 40 PVC STILLING WELL
2. LEVEL TRANSDUCER DEPTH TO BE DETERMINED IN FIELD.
3. THE WELL SCREEN SLOT SIZE AND TYPE OF SILICA SAND THAT WILL BE INSTALLED DURING WELL CONSTRUCTION IS SUBJECT TO CHANGE DEPENDING UPON THE SUBSURFACE DATA COLLECTED DURING PILOT BORING TESTING.

INJECTION WELL CONSTRUCTION DETAIL 2

NOT TO SCALE

FINAL DESIGN SUBMITTAL

NOT TO SCALE

THIS BAR REPRESENTS ONE INCH ON THE ORIGINAL DRAWING: USE TO VERIFY FIGURE REPRODUCTION SCALE

No.	Date	Revisions	By	Ckd

THIS DRAWING IS THE PROPERTY OF THE ARCADIS ENTITY IDENTIFIED IN THE TITLE BLOCK AND MAY NOT BE REUSED OR ALTERED IN WHOLE OR IN PART WITHOUT THE EXPRESS WRITTEN PERMISSION OF SAME.

Professional Engineer's Name: TIMOTHY E. MILLER
Professional Engineer's No.: 077919-1
State: NY | Date Signed: | Project Mgr.: WTM
Designed by: AMR | Drawn by: KLS | Checked by: TEM/AMR

ARCADIS
ARCADIS OF NEW YORK, INC.

FORMER TAPPAN TERMINAL SITE • HASTINGS ON HUDSON, NEW YORK
GROUNDWATER REMEDIATION SYSTEM

EXTRACTION & INJECTION WELL CONSTRUCTION DETAILS

MECHANICAL

ARCADIS Project No. B0046918.0000.00010
Date: FEBRUARY 2012

ARCADIS
6723 TOWPATH RD
PO BOX 66
SYRACUSE, NY 13214-0066
TEL. 315.446.9120

10

CITY: SYRACUSE, NY DIV/GROUP: ENV/CADD DB: GMS KFS GMS K.SARTORI PIC: J.VOGELEY PM: W.MCCUNE TM: W.MCCUNE LYR:ON=*;OFF=*REF*
G:\ENVCAD\SYRACUSE\ACT\B0046918\0000\00010\DWG\FINAL_DESIGN\46918G10.dwg LAYOUT: 10 SAVED: 2/13/2012 3:41 PM ACADVER: 18.1S (LMS TECH) PAGESETUP: D2B-PDF PLOTSTYLETABLE: PLTCONT.CTB PLOTTED: 2/13/2012 3:41 PM BY: SARTORI, KATHERINE
XREFS: 46918X00 IMAGES: PROJECTNAME: ---

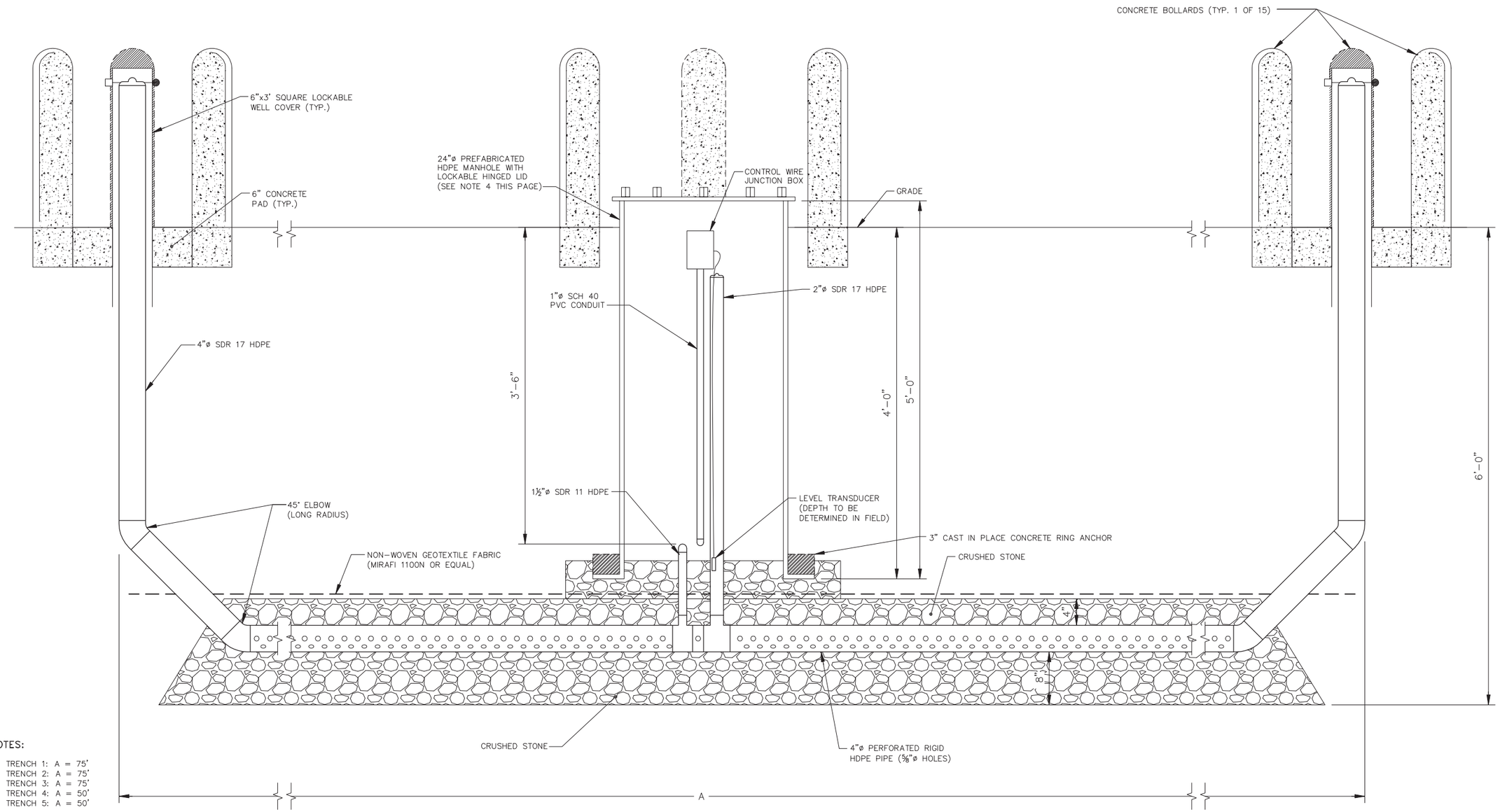

NOTES:

1. TRENCH 1: A = 75'
   TRENCH 2: A = 75'
   TRENCH 3: A = 75'
   TRENCH 4: A = 50'
   TRENCH 5: A = 50'
2. TRENCH WIDTH TO BE MINIMUM 3-FOOT
3. CONCRETE BOLLARDS SHALL BE INSTALLED IN A TRIANGLE FORMATION TO SURROUND AND PROTECT THE WELL COVERS AND HDPE MANHOLES.
4. PRE-CAST CONCRETE MANHOLES, OF THE SAME DIMENSIONS AND WITH LOCKABLE LID, MAY BE SUBSTITUTED FOR HDPE MANHOLE. USE OF PRE-CAST CONCRETE MANHOLE WILL ELIMINATE THE NEED FOR CAST IN PLACE CONCRETE RING ANCHOR.

INFILTRATION TRENCH DETAIL

NOT TO SCALE

FINAL DESIGN SUBMITTAL

CITY: SYRACUSE, NY DIV/GROUP:ENV/CADD DB: GMS KFS GMS K.SARTORI PIC:J.VOGELEY PM: W.MCCUNE TM: W.MCCUNE LYR:ON=*;OFF=*REF*
G:\ENV\CAD\SYRACUSE\ACT\B0046918\0000\00010\DWG\FINAL_DESIGN\46918G11.dwg LAYOUT: 11 SAVED: 2/10/2012 10:57 AM ACADVER: 18.1S (LMS TECH) PAGESETUP: D2B-PDF PLOTSTYLETABLE: PLTCONT.CTB PLOTTED: 2/10/2012 10:57 AM BY: SARTORI, KATHERINE
XREFS: IMAGES: PROJECTNAME: ---
46918X00

NOT TO SCALE

THIS BAR REPRESENTS ONE INCH ON THE ORIGINAL DRAWING: USE TO VERIFY FIGURE REPRODUCTION SCALE

No.	Date	Revisions	By	Ckd

THIS DRAWING IS THE PROPERTY OF THE ARCADIS ENTITY IDENTIFIED IN THE TITLE BLOCK AND MAY NOT BE REUSED OR ALTERED IN WHOLE OR IN PART WITHOUT THE EXPRESS WRITTEN PERMISSION OF SAME.

Professional Engineer's Name: TIMOTHY E. MILLER
Professional Engineer's No.: 077919-1
State: NY | Date Signed: | Project Mgr.: WTM
Designed by: AMR | Drawn by: KLS | Checked by: TEM/AMR

ARCADIS
ARCADIS OF NEW YORK, INC.

FORMER TAPPAN TERMINAL SITE • HASTINGS ON HUDSON, NEW YORK
GROUNDWATER REMEDIATION SYSTEM

INFILTRATION TRENCH DETAIL

MECHANICAL

ARCADIS Project No. B0046918.0000.00010
Date FEBRUARY 2012

ARCADIS
6723 TOWPATH RD
PO BOX 66
SYRACUSE, NY 13214-0066
TEL. 315.446.9120

INSTRUMENT SPECIFICATIONS:

1. FLOWMETERS (FIT–100, –110, –201, –700), SHALL BE 2–INCH BADGER METER MODEL M–SERIES OR EQUAL WITH LINER SUITABLE FOR WATER SERVICE, 316 SS ELECTRODES, GROUNDING RINGS, AND INTEGRAL MOUNT ELECTRONICS WITH LOCAL RATE AND TOTAL DISPLAY.

2. FLOW TOTALIZERS (FT–300–FT–380), SHALL BE 1–½" BADGER MODEL 120 RCDL RECORD METER WITH LCP INTERNALS AND 1–½" THREADED CONNECTIONS. NORMAL FLOW RANGE 2–120 GPM. METER TO BE EQUIPPED WITH A RTR REGISTER/TRANSMITTER.

3. FLOWMETER (FM–200), SHALL BE DWYER INDUSTRIAL MODEL IF2707 OR EQUAL.

4. LEVEL TRANSMITTER (LIT–200, LIT–300), SHALL BE WIKA MODEL LS–10 OR EQUAL WITH SS WELDED PARTS, 4–20 MA OUTPUT.

5. LEVEL SWITCH (LSHH–200, LSLL–200, LSHH–300, LSLL–300 AND, LSHH–400) SHALL BE GEMS MODEL MBLU40T OR EQUAL FLOAT SWITCH, NORMALLY OPEN OUTPUT WITH 40' CABLE.

6. LIQUID PRESSURE GAUGES (PI–101, –102, –103, –201, –301) SHALL BE WIKA MODEL 232 OR EQUAL 4.5–INCH LOW PRESSURE PROCESS GAUGE WITH LOWER MOUNT, 316 SS CONNECTION, 0–100 PSI RANGE.

7. LIQUID PRESSURE GAUGES (PI–700 – PI–708) SHALL BE WIKA MODEL 232 OR EQUAL 4.5–INCH LOW PRESSURE PROCESS GAUGE WITH LOWER MOUNT, 316 SS CONNECTION, 0–50 PSI RANGE.

8. AIR PRESSURE GAUGES (PI–900, –901) SHALL BE WIKA MODEL 232 OR EQUAL 4.5–INCH LOW PRESSURE PROCESS GAUGE WITH LOWER MOUNT, 316 SS CONNECTION, 0–100 PSI RANGE.

9. SOLENOID VALVE SV–900 SHALL BE ANDERSON–BOLDS VALCOR MODEL SV321 GF02N5DG4 OR EQUAL.

10. TEMPERATURE TRANSMITTER (TIT–800) SHALL BE FOXBORO MODEL RTT150T1WCQNAF–21 INSERTION–STYLE TEMPERATURE TRANSMITTER OR EQUAL WITH LOCAL DISPLAY NEMA RATED ENCLOSURE, 3–INCH RTD WITH NO WELL, 4–20 MA OUTPUT, LOOP POWERED.

11. PRESSURE SWITCHES (PS–200, –300 WET, PSL–900 DRY) SHALL BE ASHCROFT MODEL TYPE B, 0–100 PSI, PART # AC B429B– 0/100.

12. EXTRACTION WELL LEVEL TRANSMITTER (LT–100, –110) SHALL BE GEOTECH MODEL 8205102. CABLE SHALL BE 25–FEET LONG, PRESSURE TRANSDUCER SHALL BE NON–VENTED RATED FOR 30–PSI.

13. INJECTION TRENCH LEVEL TRANSDUCER (LT–700 – LT–704) SHALL BE GEOTECH MODEL 8205102. CABLE SHALL BE 10–FEET LONG, PRESSURE TRANSDUCER SHALL BE NON–VENTED RATER FOR 30–PSI.

14. INJECT WELL LEVEL TRANSMITTER (LT–705 – LT–708) SHALL BE GEOTECH MODEL 8205102. CABLE SHALL BE 20–FEET LONG, PRESSURE TRANSDUCER SHALL BE NON–VENTED RATED FOR 30–PSI.

15. LEVEL SWITCH (LSHH–800) SHALL BE AT FLOW LINE SWITCH –TEK LV20–L201 LEVEL SWITCH.

16. MOTORIZED CONTROL VALVE (XCV–200) SHALL BE A A–T CONTROLS 90C–F1–300/WEC1–XX 3–INCH 150# ANSI RF FLANGED FULL PORT BALL VALVE, CARBON STEEL BODY, 316 SS BALL AND STEM, RTFE SEATS MOUNTED WITH WE–1350. 120/60–2–POSITION ELECTRIC ACTUATOR, 2 AUXILIARY SWITCHES AND BEACON FOR LOCAL/REMOTE POSITION INDICATION, MANUAL HAND WHEEL OVERRIDE.

MAJOR EQUIPMENT SPECIFICATIONS:

1. WELL PUMPS (P–100, –110) SHALL BE GRUNDFOS MODEL 60S20–4(60S204PETF) OR EQUAL SUBMERSIBLE WELL PUMPS WITH 2 HP, 460 V, 3 PHASE VITON FITTED MOTORS CAPABLE OF 50 GPM AT 60(P–100 = 61' TDH, P–110 = 56' TDH) FEET TDH.

2. TRANSFER PUMP P–200 SHALL BE A GOULDS NPE STAINLESS STEEL PUMP MODEL 3ST1H5B4 WITH 3 HP, 460 VOLT, THREE PHASE MOTOR CAPABLE OF 100 GPM AT 65 TDH. PUMP WILL BE CONTROLLED WITH NEMA 1 PUMP PANEL.

3. TRANSFER PUMP P–300 SHALL BE A GOULDS NPE STAINLESS STEEL PUMP MODEL 3ST1F5E4 WITH 1.5 HP, 460 VOLT, THREE PHASE MOTOR CAPABLE OF 100 GPM AT 25 TDH. PUMP WILL BE CONTROLLED WITH NEMA 1 PUMP PANEL.

4. AIR COMPRESSOR T–500/600 SHALL BE A KAESER AIRCENTER PACKAGED ROTARY SCREW AIR COMPRESSOR [AIR COOLED] WITH INTEGRAL REFRIGERATED DRYER (230 OR 460 VAC, 60 HZ, 3 PHASE), ECO–DRAIN ELECTRONIC DEMAND DRAIN, SOUND ATTENUATED ENCLOSURE (67 DB(A)), PC–BASED SIGMA CONTROL BASIC SYSTEM, TWO–STAGE 4 MICRON AIR INTAKE FILTER, AND THREE–STAGE SEPARATION SYSTEM, TANK–MOUNTED ON A STEEL FRAME/72–GALLON ASME AIR RECEIVER WITH A SAFETY RELIEF VALVE, ISOLATION VALVES, AND OPTIONAL CLEAN AIR TREATMENT PACKAGE. THIS AIR–COOLED SYSTEM WILL PRODUCE 28.5 CORRECTED SCFM OF AIR AT 125 PSIG.

5. OXYGEN GENERATOR T–700 SHALL BE AN AIRSEP MODEL AS–D+100 SERIES PSA OXYGEN GENERATOR [PART NUMBER AS097–1] (110/120 VAC, 50/60 HZ, 1 PHASE) WITH ACCESSORY KITS [PART NUMBER KI425–1 AND KI474–1], AND 60–GALLON ASME OXYGEN–CLEANED RECEIVER [PART NUMBER TA150–1]. UNIT WILL BE CALIBRATED TO DELIVER 100 SCFH OF 90 TO 95% PURITY OXYGEN AT A MAXIMUM DELIVERY PRESSURE OF 45 PSIG.

6. VENTURI UNJECTOR SHALL BE MAZZEI MODEL 2081 PVDF INJECTOR OR EQUAL WITH 2" ASME B16.5 150# FLANGE INLET/OUTLET, 100 GPM AT 50 PSI INLET PRESSURE, 100 CFH OXYGEN INJECTION.

7. FLASH REACTOR SHALL BE MAZZEI MODEL FR235–A OR EQUAL FLASH REACTOR OF STAINLESS STEEL CONSTRUCTION.

8. WATER TANKS (T–200, T–300) SHALL BE POLY PROCESSING MODEL 1001450 OR EQUAL WITH 1450–GALLON CAPACITY AND HIGH DENSITY POLYETHYLENE CONSTRUCTION.

9. SOLIDS SETTLING TANK (T–400) SHALL BE ASSMANN MODEL ICT 5500 OR EQUAL VERTICAL STORAGE TANK WITH 24" HINGED MANWAY COVER, 4" POLYETHYLENE MUSHROOM VENT WITH EPDM GASKET, 3" FDO WITH 316 SS INSERT AND XLPE FLANGE ADAPTER, 3" PVC FLANGE FITTING, 80 DEGREE DELTA T HEAT TRACING PACKAGE, 2" THICK NOMINAL URETHANE FOAM INSULATION.

10. VARIABLE FREQUENCY DRIVE SHALL BE AN ABB DRIVE ACS355 DRIVE. DRIVES WILL BE INSTALLED IN MOTOR CONTROL ENCLOSURE NUMBER 1 (MCE–1) (SEE E–1 FOR MORE DETAILS ON MCE–1).

11. EQUIPMENT ENCLOSURE SHALL BE A MODIFIED SHIPPING CONTAINER, DIMENSIONS OF APPROXIMATELY 8 FOOT WIDE BY 40 FOOT LONG. WITH INTERIOR HEATING, VENTILATION, AND INSULATED. ALL EQUIPMENT WITHIN THE ENCLOSURE SHALL BE PROVIDED, INSTALLED, AND SHIPPED BY VENDOR.

MECHANICAL SPECIFICATIONS:

1. ALL PVC PIPE JOINTS SHALL BE SOLVENT WELDED UNLESS OTHERWISE STATED.

2. ALL HDPE PIPES SHALL BE BUTT–FUSED.

3. ALL PIPE SHALL BE INSTALLED AND PRESSURE TESTED IN ACCORDANCE WITH MANUFACTURER'S SPECIFICATIONS. ZERO LEAKAGE IS ALLOWED FOR ALL JOINTS.

4. ALL PIPE SHALL BE SUPPORTED AT 7'–0" O.C. (MAX.) AND LOCATED 2'–0" FROM ALL JOINT LOCATIONS. ABOVE–GROUND PIPING SHALL BE SUPPORTED PRIMARILY BY THE TRAILER STRUCTURE.

5. BALL VALVES SHALL BE PVC TRUE UNION BALL VALVES WITH VITON O–RING SEAL, TEFLON SELF–LUBRICATING SEATS, TIGHT SHUTOFF IN EITHER DIRECTION, FULL PORT DESIGN, SOLVENT WELDED SOCKET ENDS AND OPERATING HANDLE. MANUFACTURER: HAYWARD, NIBCO, PLASTO–MATIC, OR EQUAL.

6. GLOBE VALVES SHALL BE ASAHI MANUAL CONTROL VALVES OF PVC CONSTRUCTION WITH EPDM SEALS, AND SOCKET CONNECTIONS.

7. CHECK VALVES SHALL BE SWING CHECK TYPE WITH VITON SEATS. MANUFACTURER: HAYWARD, NIBCO, PLASTO–MATIC, OR EQUAL.

8. SAMPLE TAPS AND DRAIN VALVES SHALL CONSIST OF A 3/4" DIAMETER PVC PIPE EXTENSION, BALL VALVE AND NIPPLE. SAMPLE TAPS AND DRAIN VALVES SHALL BE LOCATED AT LOCATIONS SHOWN ON THE DRAWINGS AND AT ALL LOW ELEVATIONS IN THE PROCESS PIPING.

9. ALL FLOW METERS SHALL HAVE STRAIGHT PIPE AT A MINIMUM OF 10 PIPE DIAMETERS PRECEDING AND 5 PIPE DIAMETERS FOLLOWING, OR AS SPECIFIED BY THE MANUFACTURER.

10. CONCRETE MANHOLES SHALL BE CHRISTY MODEL B2436BOX 2' BY 3' I.D. OPEN BOTTOM CONCRETE VAULT WITH TORISON ASSISTED H–20 TRAFFIC RATED, LOCKABLE COVER AS DIRECTED BY THE DRAWINGS.

11. 1"ø AND 1.5"ø PENETRATIONS IN THE INJECTION WELL VAULT WALLS SHALL BE 3"ø BORES EACH SEALED WITH (4) LS–300C LINK–SEALS.

12. PITTLESS ADAPTERS SHALL BE MAASSMIDWEST MODEL S–20 OR EQUAL.

13. HDPE MANHOLE SHALL BE PRE–FABRICATED WITH LOCKABLE HINGED LID.

14. NEEDLE VALVE SHALL BE GRAINGER MODEL 5WLIZ 1/4 INCH DIAMETER BRASS RATED 600 PSI @ 300°F.

15. PIPE INSULATION (2 INCH, 3 INCH, 6 INCH, 1–½ INCH PIPE) SHALL BE 1–INCH THICK CLOSED CELL FOAM INSULATION WITH PVC JACKETING.

FINAL DESIGN SUBMITTAL

CITY: SYRACUSE, NY DIV/GROUP:ENV/CADD DB: GMS KFS GMS K.SARTORI PIC:J.VOGELEY PM: W.MCCUNE TM: W.MCCUNE LYR:ON=*;OFF=*REF*
G:\ENV\CAD\SYRACUSE\ACT\B0046918\0000\00010\DWG\FINAL_DESIGN\46918G12.dwg LAYOUT: 12 SAVED: 2/10/2012 10:51 AM ACADVER: 18.1S (LMS TECH) PAGESETUP: D2B-PDF PLOTSTYLETABLE: PLTCONT.CTB PLOTTED: 2/10/2012 10:51 AM BY: SARTORI, KATHERINE
XREFS: 46918X00 IMAGES: PROJECTNAME: —

THIS BAR REPRESENTS ONE INCH ON THE ORIGINAL DRAWING: USE TO VERIFY FIGURE REPRODUCTION SCALE

No.	Date	Revisions	By	Ckd

THIS DRAWING IS THE PROPERTY OF THE ARCADIS ENTITY IDENTIFIED IN THE TITLE BLOCK AND MAY NOT BE REUSED OR ALTERED IN WHOLE OR IN PART WITHOUT THE EXPRESS WRITTEN PERMISSION OF SAME.

Professional Engineer's Name: TIMOTHY E. MILLER
Professional Engineer's No.: 077919-1
State: NY | Date Signed: | Project Mgr.: WTM
Designed by: AMR | Drawn by: KLS | Checked by: TEM/AMR

ARCADIS
ARCADIS OF NEW YORK, INC.

FORMER TAPPAN TERMINAL SITE • HASTINGS ON HUDSON, NEW YORK
GROUNDWATER REMEDIATION SYSTEM

SPECIFICATIONS

MECHANICAL

ARCADIS Project No. B0046918.0000.00010
Date FEBRUARY 2012
ARCADIS
6723 TOWPATH RD
PO BOX 66
SYRACUSE, NY 13214-0066
TEL. 315.446.9120

12

ELECTRICAL SPECIFICATIONS:

GENERAL

1. ALL ELECTRICAL EQUIPMENT SHALL BE U.L. LISTED AND LABELED.
2. ALL ELECTRICAL WORK SHALL BE IN ACCORDANCE WITH THE LATEST REVISION OF NFPA–70 NEC.

RIGID METAL CONDUIT (RGS)

1. GALVANIZED STEEL, HOT–DIPPED ZINC, ANSI STANDARD C80.1 AND C80.4.
2. MANUFACTURER SHALL BE ALLIED TUBE & CONDUIT CORPORATION, TRIANGLE WIRE AND CABLE INC., OR EQUAL.

NONMETALLIC (PVC) CONDUIT

1. NONMETALLIC RIGID CONDUIT AND FITTINGS SHALL BE SCHEDULE 40, POLYVINYL CHLORIDE AND SHALL BE RESISTANT TO CORROSION.
2. CONDUIT AND FITTINGS SHALL BE IN ACCORDANCE WITH NEMA STANDARD TC–2 AND TC–3, LATEST REVISION.
3. MANUFACTURER SHALL BE CARLON ELECTRIC CONDUIT CO., TRIANGLE PWC CO., OR EQUAL.

JUNCTION BOXES

JUNCTION BOXES AND FITTINGS SHALL BE OF GALVANIZED STEEL OR COPPER FREE ALUMINUM.

WIRES AND CABLES

1. GENERAL
   A. ALL CONDUCTORS, UNLESS OTHERWISE NOTED, SHALL BE STRANDED COPPER, CONSTRUCTED OF SOFT DRAWN OR ANNEALED COPPER.
   B. CONDUCTORS INSULATION SHALL BE COLOR CODED, WITH COLOR OF INSULATION ONE COLOR THROUGHOUT THE ENTIRE RUN.
   C. 120/240 VAC, SINGLE PHASE, 3 WIRE
      CONDUCTOR 1 – BLACK
      CONDUCTOR 2 – RED
      NEUTRAL – WHITE
      GROUND – GREEN
2. LOW VOLTAGE CONDUCTORS
   A. ALL CONDUCTORS FOR POWER, LIGHTING AND 120 VAC CONTROL SHALL BE RATED A MINIMUM 600 VAC.
   B. CONDUCTORS SHALL BE CONSTRUCTED OF UNCOATED CLASS C COPPER CONCENTRIC–LAY–STRANDED WIRES.
   C. POWER AND LIGHTING CONDUCTORS SHALL BE TYPE THHN–90C/THWN–2–90C WITH PVC INSULATION AND NYLON JACKET.
3. INSTRUMENTATION CABLES
   TWISTED PAIR OF NO. 18 AWG TINNED COATED CLASS C COPPER CONCENTRIC LAY STRANDED WIRES WITH AN ALUMINUM POLYESTER SHIELD AND COPPER DRAIN. RATED FOR 600V AND COLOR COATED PVC OUTER JACKET.
4. CONNECTORS
   A. PIGTAIL SPLICING #10 AND SMALLER, USE TAPERED SPRING WIRE NUTS. MANUFACTURER SHALL BE IDEAL WING NUT, BUCHANAN B–CAP, T&B PIGGIES, OR EQUAL.
   B. FOR TERMINATION OF #14 CONTROL WIRES TO TERMINALS, USE INSULATED COMPRESSION SPADE TYPE CONNECTORS. MANUFACTURER SHALL BE BURNDY HYDENT, T&B STA–KON, OR EQUAL.
   C. SPLICES AND TERMINALS FOR #8 AND LARGER SHALL BE COPPER COMPRESSION TYPE. MANUFACTURER SHALL BE BURNDY HYDENT OR HYLUG, T&B, STA–CON, OR EQUAL.
   D. FIXTURE CONNECTIONS MANUFACTURER SHALL BE T&B STA–KON SERIES PT–66M, IDEAL CRIMP SLEEVE NO. 410 WITH LONG BARREL, OR EQUAL.

GROUNDING

1. GROUNDING OF ELECTRICAL SYSTEMS AND EQUIPMENT SHALL, AT A MINIMUM, MEET THE REQUIREMENTS OF THE NEC ARTICLE 250 OR SHALL EXCEED ARTICLE 250 AS HEREIN SPECIFIED.
2. ALL CONDUITS SHALL HAVE AN INTERNAL GROUND CONDUCTOR. THIS GROUND CONDUCTOR SHALL BE PROVIDED ALTHOUGH IT MAY NOT BE SHOWN OR SCHEDULED ON THE PLANS.
3. GROUNDING ELECTRODE CONDUCTORS SHALL BE A MINIMUM OF NO. 6 AWG BARE STRANDED COPPER.
4. GROUND RODS SHALL BE 3/4" DIAMETER, 10 FEET LONG, STEEL CORE WITH COPPER MOLTEN WELDED OR ELECTROLYTICALLY BONDED TO EXTERIOR.
5. ALL CONNECTIONS SHALL BE MADE WITH COMPRESSION OR CADWELD CONNECTORS.

ENCLOSURE

1. ENCLOSURES SHALL BE NEMA RATED FOR LOCATION UNLESS OTHERWISE NOTED.
2. WET LOCATIONS OR OUTDOORS, ENCLOSURES SHALL BE NEMA TYPE 4, STAINLESS STEEL.
3. ENCLOSURES SHALL HAVE NAMEPLATE ON THE EXTERIOR IDENTIFYING THE APPLICATION FUNCTION OF THE EQUIPMENT ENCLOSED.

WIRING DEVICES

1. RECEPTACLES MARKED AS GFCI SHALL BE OF THE GROUND FAULT CIRCUIT INTERRPUTER TYPE. MANUIFACTURER SHALL BE GE TYPE TGTR 20, OR EQUAL.
2. SWITCHES
   A. LIGHTING SWITCHES SHALL BE RATED 20 AMPERES AT 277 VAC, TOGGLE OPERATED, PLASTIC ENCLOSED, SINGLE POLE, THREE–WAY OR FOUR–WAY AS SHOWN OR REQUIRED. MANUFACTURER SHALL BE P&S SERIES 20AC1 SEPCIFICATION GRADE, OR EQUAL.
   B. SWITCHES SHALL HAVE SILVER ALLOY CONTACTS AND PROVISIONS FOR SIDE AND BACK WIRING.
   C. EACH SWITCH SHALL BE SUITED FOR FULL–RATED CAPACITY ON TUNGSTEN FILAMENT AND FLOURSCENT LAMP LOADS.
3. FACEPLATE AND COVERS
   A. FINISHED AREAS SHALL HAVE STAINLESS STEEL TYPE 302 ALLOY COVERS.
   B. WET AND CORROSIVE AREAS SHALL BE WEATHERPROOF COVERS WITH GASKETS.

CONDUCTOR SCHEDULE

SYMBOL	WIRE QUANTITY	WIRE SIZE	GROUND	CONDUIT	COMMENTS
20	3	#12	1 #12	3/4"	
30S	2	#10	1 #10	3/4"	
70S	3	#4	1 #8	1"	INCLUDES NEUTRAL
200	4	#3/0	1 #4	2"	INCLUDES NEUTRAL

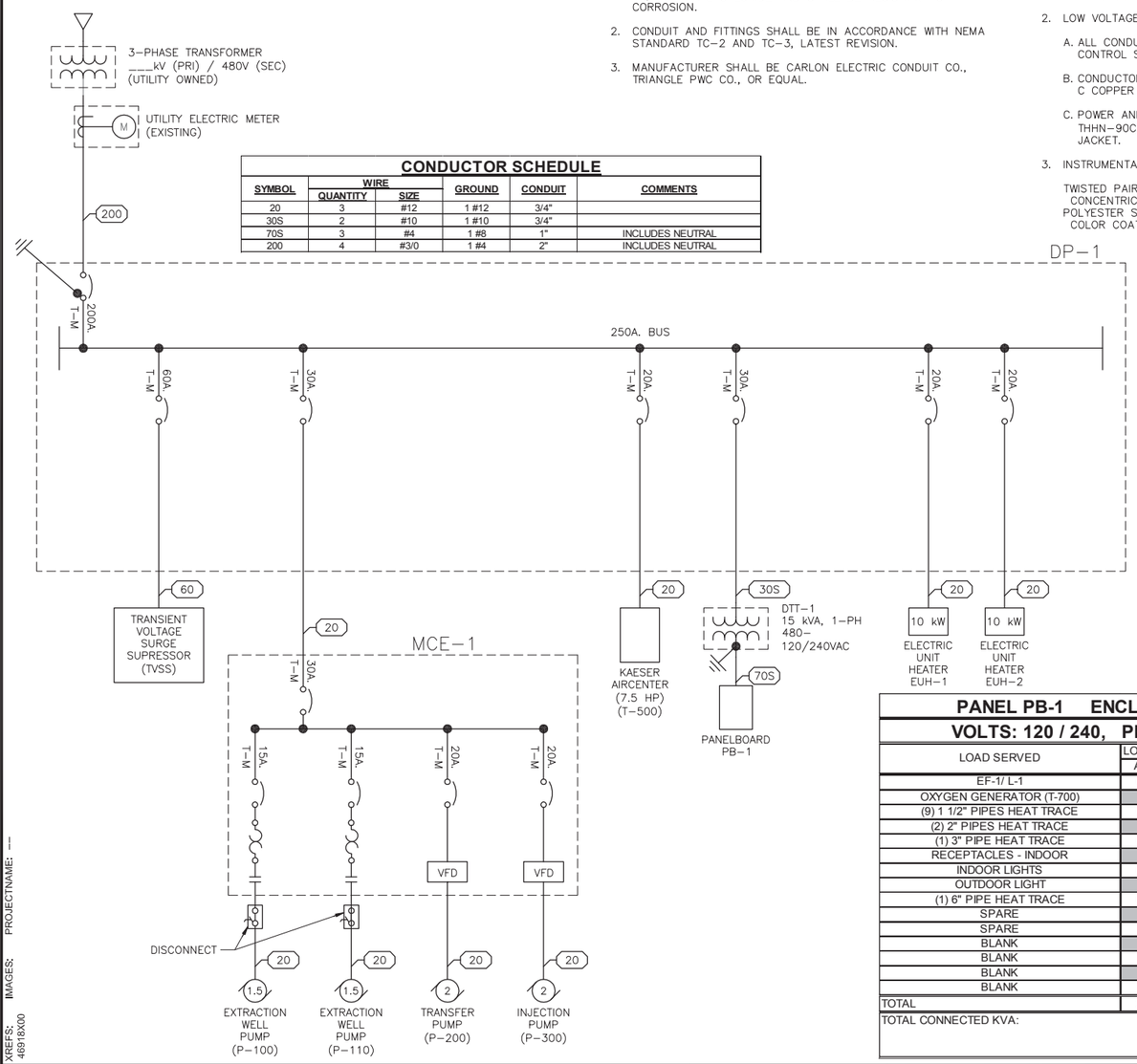

NOTES:
1. PROVIDE 2 #12, 1 #12 GROUND –3/4"C. FOR EACH SINGLE POLE CIRCUIT IN PB–1, UNLESS OTHERWISE NOTED.
2. PROVIDE 5 HANDLE LOCKOFF/ PADLOCK ATTACHMENT ACCESSORIES FOR DP–1 (FOR LOCKOUT/ TAG OUT PROCEDURES).

PANEL PB-1 ENCLOSURE: NEMA TYPE 12, CABINET MOUNTING: SURFACE
VOLTS: 120 / 240, PHASE: 1, WIRE: 3W, 10,000 AIC, 100A. C/B, FEED: TOP

LOAD SERVED	LOAD (KVA) A	LOAD (KVA) B	BREAKER AMP	BREAKER POLE	CKT	PH	CKT	BREAKER POLE	BREAKER AMP	LOAD (KVA) A	LOAD (KVA) B	LOAD SERVED
EF-1/ L-1	0.7		20	1	1	A	2	1	20	0.3		FIT-100; FIT-110
OXYGEN GENERATOR (T-700)		0.4	20	1	3	B	4	1	20		0.3	LIT-200; LIT-300
(9) 1 1/2" PIPES HEAT TRACE	0.5		20	1	5	A	6	1	20	0.2		TIT-800
(2) 2" PIPES HEAT TRACE		0.1	20	1	7	B	8	1	20		0.8	MAIN PLC CONTROL PANEL
(1) 3" PIPE HEAT TRACE	0.4		20	1	9	A	10	1	20	1.3		T-400 HEAT TRACE
RECEPTACLES - INDOOR		0.3	20	1	11	B	12	1	20			SPARE
INDOOR LIGHTS	0.5		20	1	13	A	14	1	20			SPARE
OUTDOOR LIGHT		1.0	20	1	15	B	16	1	20			SPARE
(1) 6" PIPE HEAT TRACE	0.5		20	1	17	A	18	1	20			SPARE
SPARE			20	1	19	B	20	1				BLANK
SPARE			20	1	21	A	22	1				BLANK
BLANK				1	23	B	24	1				BLANK
BLANK				1	25	A	26	1				BLANK
BLANK				1	27	B	28	1				BLANK
BLANK				1	29	A	30	1				BLANK
TOTAL	2.6	1.8								1.8	1.1	
TOTAL CONNECTED KVA:									A:	4.4		
									B:	2.9		
									TOTAL	7.3		

LEGEND

- ENCLOSURE LIMITS
- MOTOR, # DENOTES H.P.
- EARTH GROUND
- TRANSFORMER, POWER
- MOLDED CASE CIRCUIT BREAKER
- ELECTRIC UTILITY METER CABINET
- LIGHT SWITCH
- CONDUCTOR SYMBOL
- DUPLEX RECEPTACLE, 120 VAC

ABBREVIATIONS

1FVNR	FULL VOLTAGE, NON–REVERSING (SIZE 1) STARTER
A.F.F.	ABOVE FINISHED FLOOR
A	AMPERES
DTT	DRY TYPE TRANSFORMER
EF	EXHAUST FAN
EMC	ENCLOSED MOTOR CONTROLLER
EUH	ELECTRIC UNIT HEATER
HP	HORSEPOWER
kVA	KILOVOLT–AMPS
kW	KILOWATT
MCC	MOTOR CONTROL CENTER
MCP	MOTOR CIRCUIT PROTECTOR CIRCUIT BREAKER
O.L.	OVERLOAD
PB	PANELBOARD
T–M	THERMAL MAGNETIC CIRCUIT BREAKER
V	VOLTS
VAC	VOLTS AC

FINAL DESIGN SUBMITTAL

CITY: SYRACUSE, NY DIV/GROUP:ENV/CADD DB: GMS KFS GMS K.SARTORI PIC: J.VOGELEY PM: W.MCCUNE TM: W.MCCUNE LYR:ON=*;OFF=*REF*
G:\ENVCAD\SYRACUSE\ACT\B0046918\0000\00010\DWG\FINAL_DESIGN\46918E01.dwg LAYOUT: E01 SAVED: 2/10/2012 10:54 AM PLOTTED: 2/10/2012 10:54 AM BY: SARTORI, KATHERINE
XREFS: IMAGES: PROJECTNAME: —
46918X00
PAGESETUP: D2B-PDF PLOTSTYLETABLE: PLTCONT.CTB ACADVER: 18.1S (LMS TECH)

THIS BAR REPRESENTS ONE INCH ON THE ORIGINAL DRAWING: USE TO VERIFY FIGURE REPRODUCTION SCALE

No.	Date	Revisions	By	Ckd

THIS DRAWING IS THE PROPERTY OF THE ARCADIS ENTITY IDENTIFIED IN THE TITLE BLOCK AND MAY NOT BE REUSED OR ALTERED IN WHOLE OR IN PART WITHOUT THE EXPRESS WRITTEN PERMISSION OF SAME.

Professional Engineer's Name: THOMAS P. ARMSTRONG JR.
Professional Engineer's No.: 085236
State: NY | Date Signed: | Project Mgr.: WTM
Designed by: AMR | Drawn by: KLS | Checked by: TEM/AMR

ARCADIS
ARCADIS OF NEW YORK, INC.

FORMER TAPPAN TERMINAL SITE • HASTINGS ON HUDSON, NEW YORK
GROUNDWATER REMEDIATION SYSTEM

ONE-LINE

ELECTRICAL

ARCADIS Project No. B0046918.0000.00010
Date FEBRUARY 2012
ARCADIS
6723 TOWPATH RD
PO BOX 66
SYRACUSE, NY 13214-0066
TEL. 315.446.9120

E01

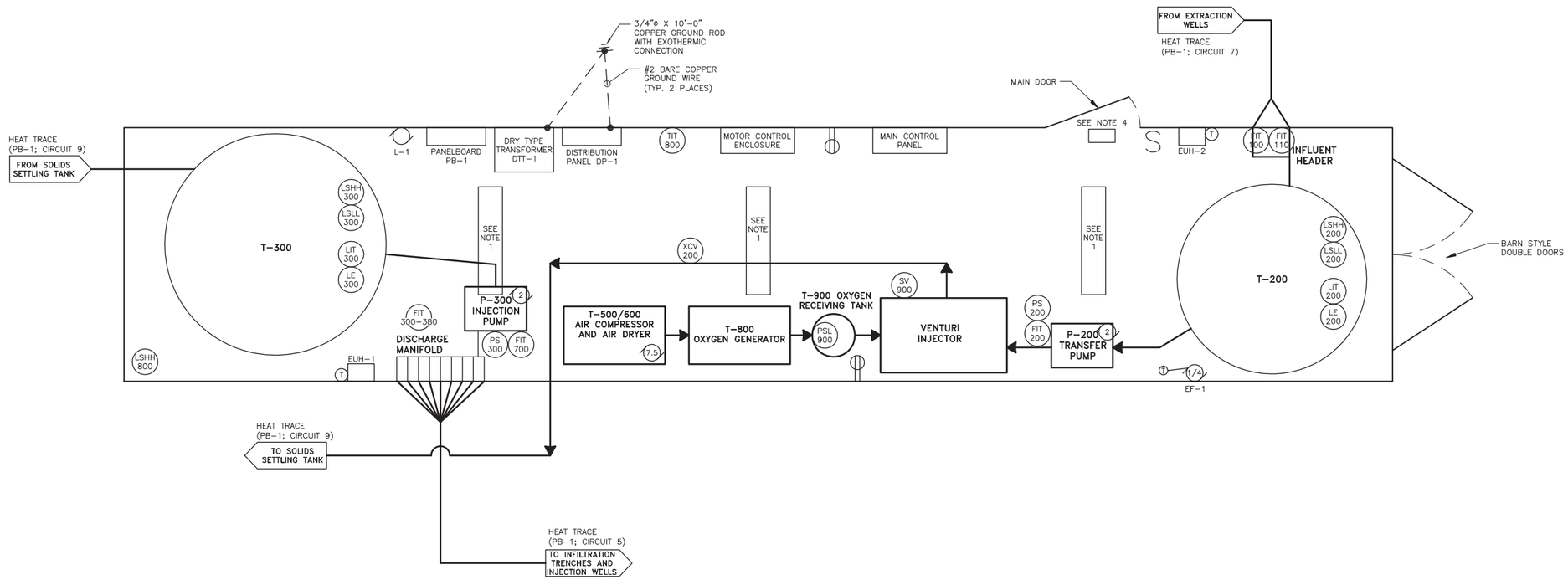

NOTES:

1. PROVIDE FLUORESCENT LIGHT FIXTURE RATED FOR DAMP LOCATIONS WITH (3), 32-WATT LAMPS. SURFACE-MOUNT FIXTURE ON CEILING (TYP. 3 PLACES)
2. REFER TO SHEET E-01 ONELINE DIAGRAM FOR CONDUIT AND WIRE INFORMATION AND FOR PANELBOARD SCHEDULE AND CIRCUIT NUMBERS.
3. RECEPTACLES SHALL BE SURFACE-MOUNTED.
4. PROVIDE 175W METAL HALLIDE OUTDOOR LIGHT FIXTURE WITH INTEGRAL PHOTOCELL CONTROL. WALL-MOUNT FIXTURE SO BOTTOM OF FIXTURE IS 8'-0" AFF.
5. REFER TO SHEET E05 FOR INSTRUMENTATION CONDUIT AND WIRE REQUIREMENTS.

EUH NOTES:

(TYPICAL 2 PLACES)

TYPE:
SUSPENDED WALL

MOUNT:
BOTTOM 5'-6" AFF.

MANUFACTURER:
CHROMALOX, MODEL LUH-12-43-32; OR EQUAL.

ELECTRICAL:
480V/3ø, 10 KW

ACCESSORIES:
INTEGRAL THERMOSTAT
DISCONNECT SWITCH
WALL MOUNT KIT

EF-1 NOTES:

TYPE:
WALL-MOUNTED PROPELLOR FAN

MOUNT:
BOTTOM 5'-6" AFF.

AIR FLOW:
1600 CFM

E.S.P.:
0.25" W.C.

MANUFACTURER:
LOREN COOK, MODEL AWD 16A17D; OR EQUAL.

ELECTRICAL:
120V/1ø, 1/4 HP

ACCESSORIES:
DISCONNECT SWITCH

THERMOSTAT:
HONEYWELL, MODEL T631C

L-1 NOTES:

TYPE:
DRAINABLE COMBINATION LOUVER

MOUNT:
BOTTOM 5'-6" AFF.

AIR FLOW:
1600 CFM

MANUFACTURER:
RUSKIN, MODEL ELF6375DAX

ELECTRICAL (MOTORIZED DAMPER):
120V/1ø

CONTROL:
DAMPER OPENS WHEN EF-1 IS ENERGIZED VIA THERMOSTAT.

PIPING HEAT TRACE NOTES:

TYPE:
SELF-REGULATING

MANUFACTURER:
DEKORON, MODEL 2310-10C00

ELECTRICAL:
120V/1ø

LOCATIONS: REFER TO SITE PLANS FOR SPECIFIC LOCATIONS AND LENGTHS.

TANK HEAT TRACE NOTES:

TYPE:
SELF-REGULATING

MANUFACTURER:
ASSMAN, MODEL ICT-5500

ELECTRICAL:
120V/1ø

LOCATION: TANK T-400 (OUTDOOR TANK; REFER TO SHEET E03)

FINAL DESIGN SUBMITTAL

No.	Date	Revisions	By	Ckd

THIS DRAWING IS THE PROPERTY OF THE ARCADIS ENTITY IDENTIFIED IN THE TITLE BLOCK AND MAY NOT BE REUSED OR ALTERED IN WHOLE OR IN PART WITHOUT THE EXPRESS WRITTEN PERMISSION OF SAME.

THIS BAR REPRESENTS ONE INCH ON THE ORIGINAL DRAWING: USE TO VERIFY FIGURE REPRODUCTION SCALE

Professional Engineer's Name: THOMAS P. ARMSTRONG JR.
Professional Engineer's No.: 085236
State: NY | Date Signed: | Project Mgr.: WTM
Designed by: AMR | Drawn by: KLS | Checked by: TEM/AMR

ARCADIS
ARCADIS OF NEW YORK, INC.

FORMER TAPPAN TERMINAL SITE • HASTINGS ON HUDSON, NEW YORK
GROUNDWATER REMEDIATION SYSTEM

ELECTRICAL EQUIPMENT LAYOUT

ELECTRICAL

ARCADIS Project No. B0046918.0000.00010
Date FEBRUARY 2012
ARCADIS
6723 TOWPATH RD
PO BOX 66
SYRACUSE, NY 13214-0066
TEL. 315.446.9120

E02

CITY: SYRACUSE, NY DIV/GROUP:ENV/CADD DB: GMS KFS GMS K.SARTORI PIC:J.VOGELEY PM: W.MCCUNE TM: W.MCCUNE LYR:ON=*;OFF=*REF*
G:\ENVCAD\SYRACUSE\ACT\B0046918\0000\00010\DW\FINAL_DESIGN\46918E02.dwg LAYOUT: E02 SAVED: 2/10/2012 10:55 AM ACADVER: 18.1S (LMS TECH) PAGESETUP: D2B-PDF PLOTSTYLETABLE: PLTCONT.CTB PLOTTED: 2/10/2012 10:55 AM BY: SARTORI, KATHERINE
XREFS: 46918X00 IMAGES: PROJECTNAME: ---

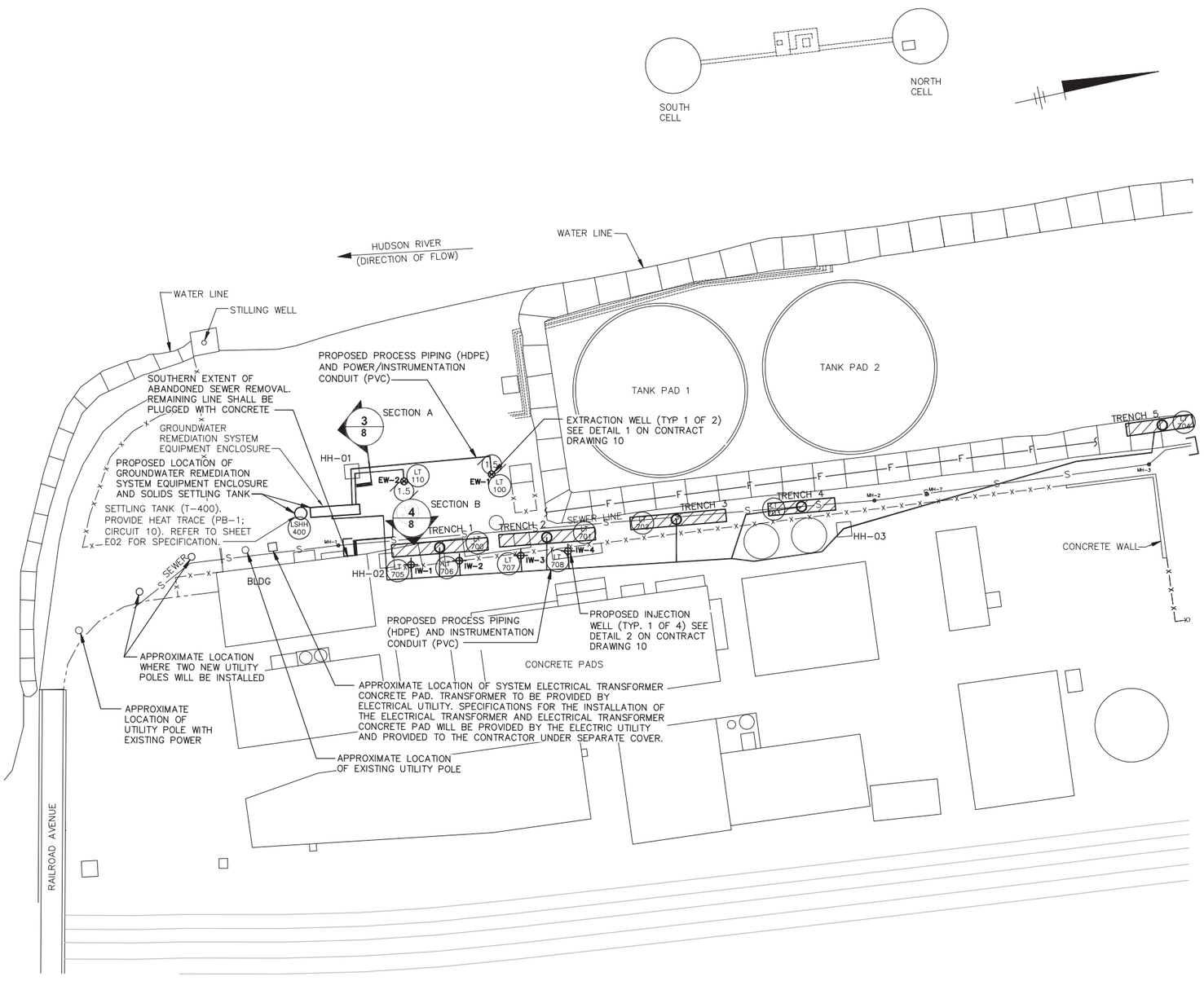

NOTES:

1. REFER TO SHEET E01 FOR 480 VOLT AND 120 VOLT CONDUIT AND WIRE REQUIREMENTS.
2. REFER TO SHEET E04 FOR THE INSTRUMENTATION CONDUIT AND WIRING REQUIREMENTS.
3. REFER TO SHEET E05 FOR THE SIGNAL LIST.

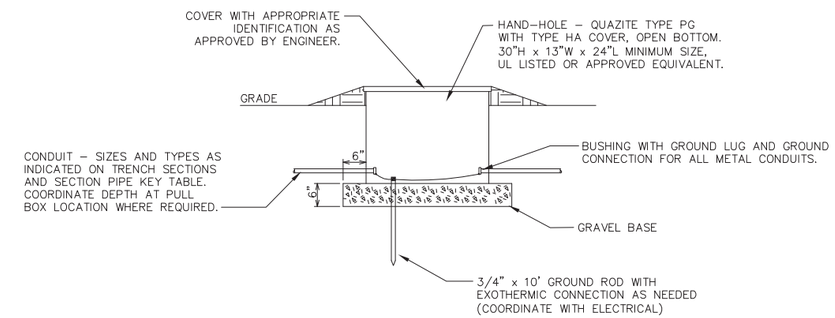

ELECTRICAL HAND-HOLE DETAIL (TYP. OF 3)

NOT TO SCALE

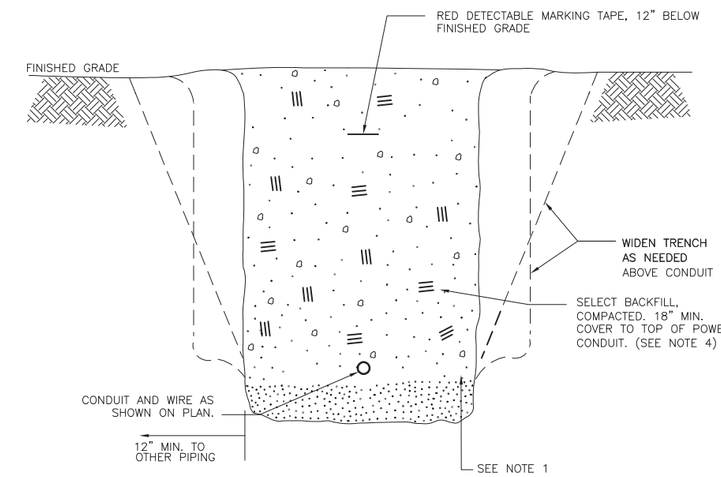

NOTES:

1. SPACING SHALL BE 6" MIN. FROM CONDUIT TO TRENCH WALL.
2. WHERE MORE THAN ONE CONDUIT IS INCLUDED IN TRENCH, PROVIDE THE FOLLOWING SPACING:
   - 3" MIN. BETWEEN POWER CONDUITS
   - 3" MIN. BETWEEN CONTROL CONDUITS
   - 6" MIN. BETWEEN POWER AND CONTROL CONDUITS

NOTES (cont.):

3. CONDUIT SHALL BE BURIED A MINIMUM OF 30" BELOW GRADE.

ELECTRICAL TRENCH DETAIL

NOT TO SCALE

FINAL DESIGN SUBMITTAL

CITY: SYRACUSE, NY DIV/GROUP:ENV/CADD DB: GMS KFS GMS K.SARTORI PIC: J.VOGELEY PM: W.MCCUNE TM: W.MCCUNE LYR:ON=*;OFF=*REF*
G:\ENVCAD\SYRACUSE\ACT\B0046918\0000\00010\DWG\FINAL_DESIGN\46918E03.dwg LAYOUT: E03 SAVED: 2/10/2012 10:55 AM ACADVER: 18.1S (LMS TECH) PAGESETUP: D2B-PDF PLOTSTYLETABLE: PLTCONT1.CTB PLOTTED: 2/10/2012 10:55 AM BY: SARTORI, KATHERINE
XREFS: 46918X01 46918X00 IMAGES: PROJECTNAME: ---

1"=50' 50' 0 50' 100'

THIS BAR REPRESENTS ONE INCH ON THE ORIGINAL DRAWING: USE TO VERIFY FIGURE REPRODUCTION SCALE

No.	Date	Revisions	By	Ckd

THIS DRAWING IS THE PROPERTY OF THE ARCADIS ENTITY IDENTIFIED IN THE TITLE BLOCK AND MAY NOT BE REUSED OR ALTERED IN WHOLE OR IN PART WITHOUT THE EXPRESS WRITTEN PERMISSION OF SAME.

Professional Engineer's Name: THOMAS P. ARMSTRONG JR.
Professional Engineer's No.: 085236
State: NY | Date Signed: | Project Mgr.: WTM
Designed by: AMR | Drawn by: KLS | Checked by: TEM/AMR

ARCADIS
ARCADIS OF NEW YORK, INC.

FORMER TAPPAN TERMINAL SITE • HASTINGS ON HUDSON, NEW YORK
GROUNDWATER REMEDIATION SYSTEM

ELECTRICAL SITE PLAN

ELECTRICAL

ARCADIS Project No. B0046918.0000.00010
Date FEBRUARY 2012

ARCADIS
6723 TOWPATH RD
PO BOX 66
SYRACUSE, NY 13214-0066
TEL. 315.446.9120

E03

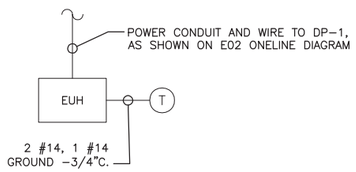

RISER DIAGRAM
ELECTRIC UNIT HEATER (EUH)
(TYP.)

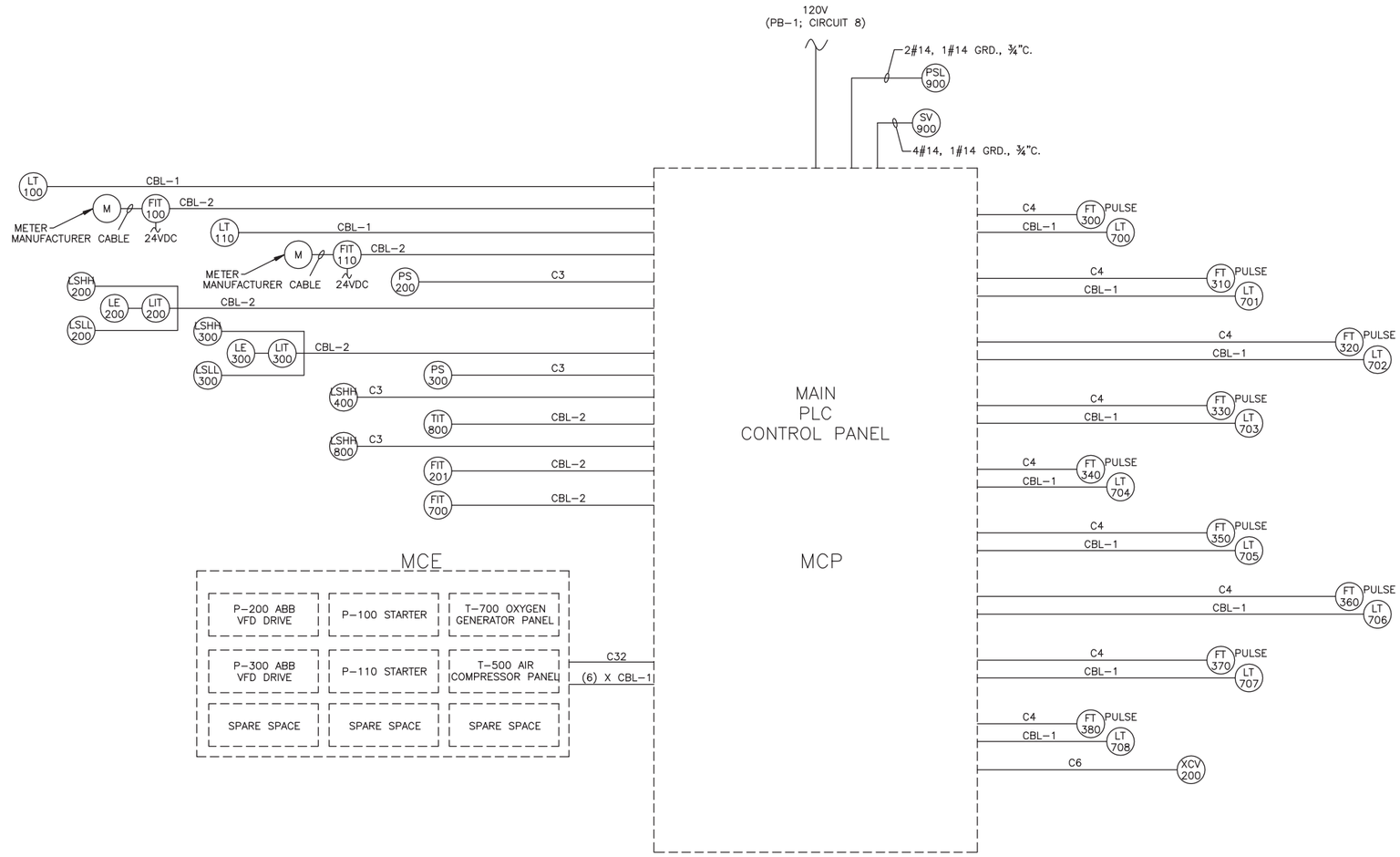

RISER DIAGRAM
INSTRUMENTATION

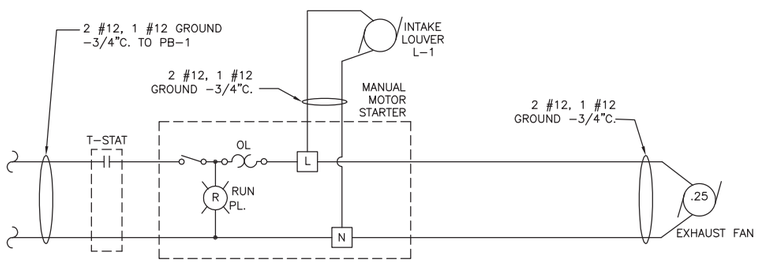

EXHAUST FAN SCHEMATIC
(EF-1)

NOTES:

1. CONTROL WIRING ASSOCIATED WITH DEVICES ON FRONT DOOR OF MAIN CONTROL PANEL MCP ARE NOT SHOWN IN RISER DIAGRAM.
2. REFER TO SHEET E01 FOR 480 VOLT AND 120 VOLT CONDUIT AND WIRE REQUIREMENTS.
3. REFER TO SHEET E05 FOR THE SIGNAL LIST.
4. HAND-OFF-AUTO SELECTOR SWITCHES SHALL BE PROVIDED ON THE FRONT DOOR OF THE MAIN PLC CONTROL PANEL, IN LIEU OF ON THE INDIVIDUAL EQUIPMENT CONTROL PANELS.
5. FLOW METERS FIT-100, FIT-110 AND FIT-700 SHALL BE SELECTED WITH 24VDC POWER REQUIREMENT, 4-20mA ANALOG OUTPUT, PULSE OUTPUT, AND REMOTE RESET.
6. UPS SHALL BE SUPPLIED WITH MAIN PLC CONTROL PANEL.
7. HUMAN MACHINE INTERFACE (HMI) SHALL BE AUTOMATION DIRECT C-MORE.
8. A CELLULAR MODEM SHALL BE INSTALLED IN THE MAIN CONTROL PANEL. CELLULAR MODEM SHALL BE RAVEN X TYPE AND ANTENNA SHALL BE PROVIDED AND INSTALLED ON THE OUTSIDE WALL OF THE BUILDING.

MCP CABLES, WIRES AND CONDUITS SCHEDULE	
CBL-1	"27325AS, 2 CONDUCTOR BELDEN CABLE, 1 #14 GND, 3/4""C. "
(6) X CBL-1	"(6) 27325AS, 2 CONDUCTOR BELDEN CABLE, 1 #14 GND, 3/4""C. "
CBL-2	5305FE BELDEN 7 CONDUCTOR CABLE., 3/4"C.
C3	2#14, 1#14 GND. 3/4" C.
C4	3#14, 1#14 GND. 3/4" C.
C6	6#14, 1#14 GND. 3/4" C.
C32	32#14, 1#14 GND. 1-1/2" C.

FINAL DESIGN SUBMITTAL

NOT TO SCALE

THIS BAR REPRESENTS ONE INCH ON THE ORIGINAL DRAWING: USE TO VERIFY FIGURE REPRODUCTION SCALE

No.	Date	Revisions	By	Ckd

THIS DRAWING IS THE PROPERTY OF THE ARCADIS ENTITY IDENTIFIED IN THE TITLE BLOCK AND MAY NOT BE REUSED OR ALTERED IN WHOLE OR IN PART WITHOUT THE EXPRESS WRITTEN PERMISSION OF SAME.

Professional Engineer's Name: THOMAS P. ARMSTRONG JR.
Professional Engineer's No.: 085236
State: NY | Date Signed: | Project Mgr.: WTM
Designed by: AMR | Drawn by: KLS | Checked by: TEM/AMR

ARCADIS
ARCADIS OF NEW YORK, INC.

FORMER TAPPAN TERMINAL SITE • HASTINGS ON HUDSON, NEW YORK
GROUNDWATER REMEDIATION SYSTEM

RISER DIAGRAMS

ELECTRICAL

ARCADIS Project No. B0046918.0000.00010
Date FEBRUARY 2012

ARCADIS
6723 TOWPATH RD
PO BOX 66
SYRACUSE, NY 13214-0066
TEL. 315.446.9120

E04

CITY: SYRACUSE, NY DIV/GROUP: ENV/CADD DB: GMS KFS GMS K.SARTORI PIC: J.VOGELEY PM: W.MCCUNE TM: W.MCCUNE LYR:ON=*;OFF=*REF*
G:\ENVCAD\SYRACUSE\ACT\B0046918\0000\00010\DWG\FINAL_DESIGN\46918E04.dwg LAYOUT: E04 SAVED: 2/10/2012 10:55 AM PLOTTED: 2/10/2012 10:55 AM BY: SARTORI, KATHERINE
PAGESETUP: D2B-PDF PLOTSTYLETABLE: PLTCONT1.CTB ACADVER: 18.1S (LMS TECH)
XREFS: 46918X00 IMAGES: PROJECTNAME: ---

INSTARUMENT LIST, SPECIFICATION AND I/O COUNTS							
TAG NUMBER	SPECIFICATIONS	DC-DI	DC-DO	AC-DI	AC-DO	AI	AO
LT100	4-20 MA 2 WIRES					1	
LT110	4-20 MA 2 WIRES					1	
LT700	4-20 MA 2 WIRES					1	
LT701	4-20 MA 2 WIRES					1	
LT702	4-20 MA 2 WIRES					1	
LT703	4-20 MA 2 WIRES					1	
LT704	4-20 MA 2 WIRES					1	
LT705	4-20 MA 2 WIRES					1	
LT706	4-20 MA 2 WIRES					1	
LT707	4-20 MA 2 WIRES					1	
LT708	4-20 MA 2 WIRES					1	
PS200	SPDT	1					
PSL900	SPDT	1					
PS300	SPDT	1					
FIT100	24VDC POWER, 4-20 MA, PULSE OUT, REMOTE RESET.	1				1	
FIT110	24VDC POWER, 4-20 MA, PULSE OUT, REMOTE RESET.	1				1	
FIT201	24VDC POWER, 4-20 MA, PULSE OUT, REMOTE RESET.	1				1	
FIT700	24VDC POWER, 4-20 MA, PULSE OUT, REMOTE RESET.	1				1	
LIT200	24VDC POWER, 4-20 MA					1	
LSLL200	SPDT, N.O.	1					
LSHH200	SPDT, N.C.	1					
LIT300	24VDC POWER, 4-20 MA					1	
LSLL300	SPDT, N.O.	1					
LSHH300	SPDT, N.C.	1					
LSHH400	SPDT, N.C.	1					
LSHH800	SPDT, N.C.	1					
TIT800	4-20 MA					1	
FT300-FT380	REED SWITCH OUTPUT	9					
XCV200	120VAC, (2)LS			2	1		
P200 DRIVE				2	1	1	1
P300 DRIVE				2	1	1	1
P100 STARTER				3	1		
P110 STARTER				3	1		
1-500 COMP. STARTER				3	1		
OX GEN T800				3	1		
AUTO DIALER			4				
MIN. NUMBER OF SPARES		8	8	4	4	8	2
	TOTAL ESTIMATE I/O :	**30**	**12**	**22**	**11**	**28**	**4**

NOTES:

1. PROVIDE A 13–SLOT RACK.
2. PROVIDE ALLEN–BRADLEY 1747–P4 POWER SUPPLY.
3. PROVIDE ALLEN–BRADLEY SLC–5/05 PROCESSOR IN SLOT 1.
4. SLOT 13 SHALL BE BLANK FOR FUTURE USE.
5. PROVIDE 120 VAC POWER DISTRIBUTION, CIRCUIT BREAKER, RELAYS, AND ANCILLARY EQUIPMENT WITHIN MAIN CONTROL PANEL AS REQUIRED.
6. SIZE MAIN CONTROL PANEL TO ACCOMMODATE EQUIPMENT SHOWN IN THE DRAWINGS TO BE INCLUDED WITHIN THE PANEL, PLUS 30% SPACE. ALL SYSTEM ELECTRICAL AND CONTROL PANELS MUST USE UL LISTED COMPONENTS AND BE UL LISTED.
7. PROVIDE ACCURATE AS–BUILT DRAWINGS UPON DELIVERY OF THE MAIN CONTROL PANEL.
8. INSTRUMENT DESCRIPTION AND MANUFACTURER INFORMATION CAN BE FOUND ON DRAWING 12.
9. PANEL DESIGN WILL BE PROVIDED PRIOR TO PANEL CONSTRUCTION.

FINAL DESIGN SUBMITTAL

CITY: SYRACUSE, NY DIV/GROUP:ENV/CADD DB: GMS KFS GMS K.SARTORI PIC:J.VOGELEY PM: W.MCCUNE TM: W.MCCUNE LYR:ON=*;OFF=*REF*
G:\ENVCAD\SYRACUSE\ACT\B0046918\0000\00010\DWG\FINAL_DESIGN\46918E05.dwg LAYOUT: E05 SAVED: 2/10/2012 10:56 AM ACADVER: 18.1S (LMS TECH) PAGESETUP: D2B-PDF PLOTSTYLETABLE: PLTCONT1.CTB PLOTTED: 2/10/2012 10:56 AM BY: SARTORI, KATHERINE
XREFS: IMAGES: PROJECTNAME: ---
46918X00

NOT TO SCALE

THIS BAR REPRESENTS ONE INCH ON THE ORIGINAL DRAWING: USE TO VERIFY FIGURE REPRODUCTION SCALE

No.	Date	Revisions	By	Ckd

THIS DRAWING IS THE PROPERTY OF THE ARCADIS ENTITY IDENTIFIED IN THE TITLE BLOCK AND MAY NOT BE REUSED OR ALTERED IN WHOLE OR IN PART WITHOUT THE EXPRESS WRITTEN PERMISSION OF SAME.

Professional Engineer's Name: THOMAS P. ARMSTRONG JR.
Professional Engineer's No.: 085236
State: NY | Date Signed | Project Mgr.: WTM
Designed by: AMR | Drawn by: KLS | Checked by: TEM/AMR

ARCADIS
ARCADIS OF NEW YORK, INC.

FORMER TAPPAN TERMINAL SITE • HASTINGS ON HUDSON, NEW YORK
GROUNDWATER REMEDIATION SYSTEM

SIGNAL LIST

ELECTRICAL

ARCADIS Project No. B0046918.0000.00010
Date FEBRUARY 2012

ARCADIS
6723 TOWPATH RD
PO BOX 66
SYRACUSE, NY 13214-0066
TEL. 315.446.9120

E05

Appendix C

Community Air Monitoring Plan

ARCADIS
Infrastructure · Water · Environment · Buildings

Imagine the result

Chevron Environmental Management Company

Community Air Monitoring Plan
Groundwater Remediation System

Former Tappan Terminal Site (NYSDEC Site # 360015)
Hastings-on-Hudson, New York

March 2012

ARCADIS

William T. McCune
Principal Geologist

Community Air Monitoring Plan Groundwater Remediation System

Former Tappan Terminal Site
Hastings-on-Hudson, New York
NYSDEC Site No. 360015

Prepared for:
Chevron Environmental Management Company

Prepared by:
ARCADIS of New York, Inc.
6723 Towpath Road
P.O. Box 66
Syracuse
New York 13214-0066
Tel 315.446.9120
Fax 315.446.8053

Our Ref.:
B0046918.0001.00003

Date:
March 2012

This document is intended only for the use of the individual or entity for which it was prepared and may contain information that is privileged, confidential and exempt from disclosure under applicable law. Any dissemination, distribution or copying of this document is strictly prohibited.

Table of Contents

1. Introduction **1**

1.1 General 1

1.2 Site Description 1

1.3 Summary of Selected Site Remedial Activities 1

1.4 Potential Air Emissions Related to Remedial Action Activities 2

1.5 Air/Odor Emissions and Control Measures 2

2. Air Monitoring Procedures **3**

2.1 General 3

2.2 Sampling Location Selection 3

2.3 VOCs Monitoring 3

2.4 Particulate Matter Monitoring 4

2.5 Action Levels 4

2.5.1 Action Levels for VOCs 4

2.5.2 Action Level for PM_{10} 5

2.6 Meteorological Monitoring 6

2.7 Instrument Calibration 6

3. Monitoring Schedule and Data Collection and Reporting **7**

3.1 General 7

3.2 Monitoring Schedule 7

3.3 Data Collection and Reporting 7

Figures

1 Site Location Map

2 Proposed Soil Excavation and Staging Locations

Attachments

A Generic Community Air Monitoring Plan

B Fugitive Dust Suppression and Particulate Monitoring Programs at Inactive Hazardous Waste Sites

C Monitoring Equipment Specifications

1. Introduction

1.1 General

On behalf of Chevron Environmental Management Company (CEMC), ARCADIS of New York, Inc. (ARCADIS) is submitting this *Community Air Monitoring Plan* (CAMP) to the New York State Department of Environmental Conservation (NYSDEC) in accordance with the Order on Consent and Administrative Settlement for the former Tappan Terminal Site, Village of Hastings-on-Hudson, New York (site). This CAMP fulfills the requirements set forth by the New York State Department of Health (NYSDOH) Generic Community Air Monitoring Plan, dated June 2000 (Attachment A), and the NYSDEC's Technical and Administrative Guidance Memorandum (TAGM) 4031, "Fugitive Dust Suppression and Particulate Monitoring Program at Inactive Hazardous Waste Sites" (Attachment B). The intent of this CAMP is to provide for a measure of protection of the downwind communities from potential airborne releases of constituents of concern during Remedial Design activities. As such, this CAMP specifies the potential air emissions, air monitoring procedures, monitoring schedule and data collection and reporting for the remedial activities to be conducted as described below.

1.2 Site Description

The site is located on 7.7 acres along the Hudson River waterfront (Figure 1). However, the eastern portion of the site (defined as AOC 2), in which the soil hotspot removal will take place, is limited to the Uhlich Color Company Property (Uhlich Property) located on the eastern half of the site and is bounded by the railroad tracks to the east and the former Mobil Terminal Property to the west (Figure 2). Vehicular access to the site was formerly via the Zinsser Bridge that crosses the railroad tracks at the southeast corner of the site. This bridge has fallen into disrepair and is no longer open to vehicular traffic. Both the Former Tappan Terminal Site and Uhlich Property are surrounded by a chain-link fence.

1.3 Summary of Selected Site Remedial Activities

The proposed remedial actions include soil hotspot removal (completed in January/February 2011), the installation of a groundwater remediation system and site capping. Site capping will not take place until mid 2011 or 2012, thus, this CAMP pertains only to the installation of the groundwater treatment system and the associated excavation of an estimated 900 cubic yards of soil. A more detailed

description of the investigation activities can be found in the 95 Percent Design Report, Groundwater Remediation System (ARCADIS, March 2011).

1.4 Potential Air Emissions Related to Remedial Action Activities

Certain intrusive remedial activities to be conducted at the site have the potential to generate localized impacts to air quality. Such activities include soil excavation, staging and amending as well as backfilling of the excavation. Non-intrusive activities that may contribute to air quality include loading of soils onto trucks for disposal, equipment decontamination and vehicular traffic on the site.

1.5 Air/Odor Emissions and Control Measures

Air emissions control and fugitive dust suppression techniques will be used during the remedial activities identified above, as necessary, to limit the air/odor emissions from the site. Air monitoring for the specific purpose of protecting the community from site activity impacts (and verification thereof) will take place during both intrusive and non-intrusive site activities.

During intrusive and non-intrusive site activities, odor and dust control measures will be available at the site and used when necessary. The following dust and odor suppression measures may be used during these activities, depending upon specific circumstances and air monitoring results:

- water spray
- polyethylene sheeting (for covering soil stockpiles)

Polyethylene sheeting will be used to control nuisance odors and volatile organic compound (VOC) emissions, as needed. Also, dust emissions at the site will be controlled by spraying water on exposed dry surface soil areas (e.g., on excavation faces, stockpiled soil, etc., as appropriate), through the use of silt fences, and by covering soil stockpiles. Odor and dust control measures will be implemented based on visual or olfactory observations, and the results of airborne particulate and VOC monitoring.

2. Air Monitoring Procedures

2.1 General

Real-time air monitoring will be implemented at the site for VOCs, and particulate matter less than 10 microns in diameter (PM_{10}). A site boundary will be established for the purpose of air monitoring. Upwind and downwind monitoring locations will be determined through visual observation (wind vane, windsock, or similar technique). Monitoring will occur at each of the two proposed excavation locations and will include the use of hand-held direct-reading survey instruments. Baseline air sampling will take place prior to the beginning of work.

2.2 Sampling Location Selection

Sampling activities will be determined daily based on visual observation of a wind direction. A single upwind location will be selected daily where both VOC and PM_{10} will be recorded. This upwind location will be established at the start of the workday, each day before the start of RI activities. Sampling activities will continue in a downwind direction throughout the day. If wind direction during the workday shifts greater than approximately +/-60 degrees from original upwind, then new upwind and downwind sampling locations will be established. Any location changes will be documented in the field logbook.

Although not a requirement of the NYSDOH, an additional air quality monitoring station will be also be located within the Park along Warburton Avenue to the immediate west of the site, throughout the duration of the hotspot excavation program.

2.3 VOCs Monitoring

As required by the NYSDOH guidance for community air monitoring during intrusive activities, VOCs will be monitored continuously during remedial site activities, with instrumentation that is equipped with electronic data-logging capabilities. A MiniRAE 2000 (or equivalent) will be used to conduct the real-time VOC monitoring. Attachment C provides detailed information on the MiniRAE 2000. All 15-minute readings will be recorded, as well as any instantaneous readings taken to facilitate activity decisions.

2.4 Particulate Matter Monitoring

As required by the NYSDOH guidance, real-time particulate matter will be monitored continuously during site activities using instrumentation equipped with electronic data-logging capabilities. A MIE DataRAM (or equivalent) will be used to conduct the real-time PM_{10} monitoring. Attachment C provides detailed information on the MIE DataRAM. All 15-minute readings will be recorded, as well as any instantaneous readings taken to facilitate activity decisions.

Fugitive dust migration will be visually assessed during all work activities, and reasonable dust suppression techniques will be used during any site activities that may generate fugitive dust. These activities and their design controls were discussed previously in Section 1.4 of this plan.

2.5 Action Levels

The action levels provided below are to be used to initiate response actions, if necessary, based on real-time monitoring.

2.5.1 Action Levels for VOCs

As outlined in the NYSDOH guidance document for CAMPs, if the ambient air concentration of total VOCs exceeds 5 parts per million (ppm) above the background (upwind location) for the 15-minute average, intrusive site activities will be temporarily halted while monitoring continues. If the total VOC concentration readily decreases (through observation of instantaneous readings) below 5 ppm above background, then intrusive site activities can resume with continuous monitoring.

If the ambient air concentrations of total VOCs persist at levels in excess of 5 ppm above background but less than 25 ppm above background, intrusive site work activities will be halted, the source of the elevated VOC concentrations identified, corrective actions to reduce or abate the emissions undertaken, and air monitoring will be continued. Once these actions have been implemented, intrusive site work activities can resume provided the following two conditions are met:

- The 15-minute average VOC concentrations remain below 5 ppm above background.

- The VOC level 200 feet downwind of the sample location, or half the distance to the nearest potential receptor or residential/commercial structure (whichever is less but in no case less than 20 feet), is below 5 ppm over background for the 15-minute average.

If the ambient air concentrations of total VOCs are above 25 ppm above background, the intrusive site activities must cease, and emissions control measures must be implemented.

Periodic monitoring for VOCs is required during non-intrusive activities such as collection of soil samples, or equipment decontamination. If these activities are undertaken at the site, ambient direct-reading (instantaneous) VOC data will be periodically collected at the location of the non-intrusive activity and recorded in the field activity logbooks.

2.5.2 Action Level for PM_{10}

As required by the NYSDOH guidance, if the ambient air concentration of PM_{10} at any one (or more) of the sampling locations is noted at levels in excess of 100 micrograms per cubic meter (µg/m^3) above the background (upwind location), or if airborne dust is observed leaving the work area, intrusive site activities will be temporarily halted. The source of the elevated PM_{10} concentration is to be identified, corrective actions to reduce or abate the emissions will be undertaken, and air monitoring will continue. Work may continue following the implementation of dust suppression techniques provided the PM_{10} levels do not exceed 150 µg/m^3 above background.

If, after implementation of dust suppression techniques, PM_{10} levels are greater than 150 µg/m^3 above background, work must be stopped and site activities must be re-evaluated. Work may only resume provided that the dust suppression measures and other controls are successful in reducing PM_{10} levels less than 150 µg/m^3 above background and in preventing visible dust from leaving the site.

If the ambient air concentration of PM_{10} is above 150 µg/m^3 above background, the intrusive site activities must cease and emissions control measures must be implemented.

2.6 Meteorological Monitoring

Wind direction is the only meteorological information considered relevant for the remedial activities and CAMP. Meteorological monitoring will be conducted periodically at the site using a windsock, wind vane, or other appropriate equipment. Wind direction will be established at the start of each work day and may be re-established at any time during the work day if a significant shift in wind direction is noted.

2.7 Instrument Calibration

Calibration of the VOC and PM_{10} instrumentation will occur in accordance with each of the equipment manufacturer's calibration and quality assurance requirements. The VOC and PM_{10} monitors will be calibrated at least daily, and calibrations will be recorded in the field activity logbook.

3. Monitoring Schedule and Data Collection and Reporting

3.1 General

The proposed monitoring schedule and data collection and reporting requirements are discussed below.

3.2 Monitoring Schedule

Real-time VOC and PM_{10} monitoring will be performed continuously throughout the remedial action during intrusive site/materials handling activities. VOC monitoring will also be performed during non-intrusive sampling and/or support-type activities. Wind direction will be determined at the start of each day and at any other appropriate time during remedial activities.

3.3 Data Collection and Reporting

Air monitoring data will be collected continuously from VOC and PM_{10} monitors during intrusive site activities by an electronic data-logging system. The data management software will be set up so that instantaneous observed readings would be recorded by the electronic data acquisition system and averaged over 15-minute time periods. The 15-minute readings and instantaneous readings taken to facilitate activity decisions will be recorded and archived for review by NYSDOH and NYSDEC personnel.

Figures

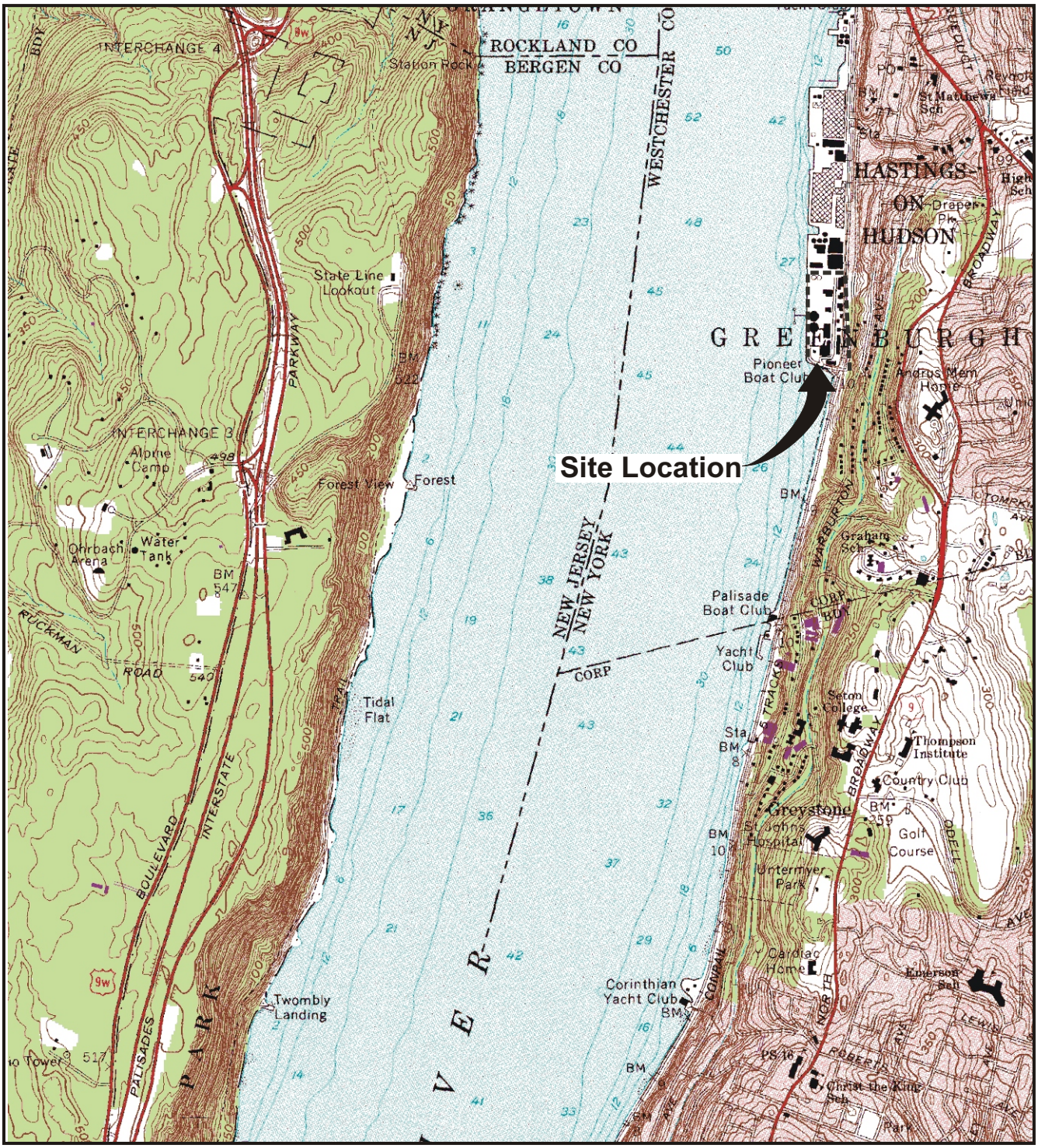

REFERENCE: BASE MAP USGS 7.5 MIN. QUAD., YONKERS, N.Y. - N.J., 1966, PHOTOREVISED 1979.

2000' 0 2000'

Approximate Scale: 1" = 2000'

Area Location

TAPPAN TERMINAL SITE
HASTINGS-ON-HUDSON, NEW YORK

SITE LOCATION MAP

ARCADIS

FIGURE
1

05/07/09 SYRACUSE, NY-ENV/CAD-DHOWES
B0046668/0000/00002/CDR/46668N01.CDR

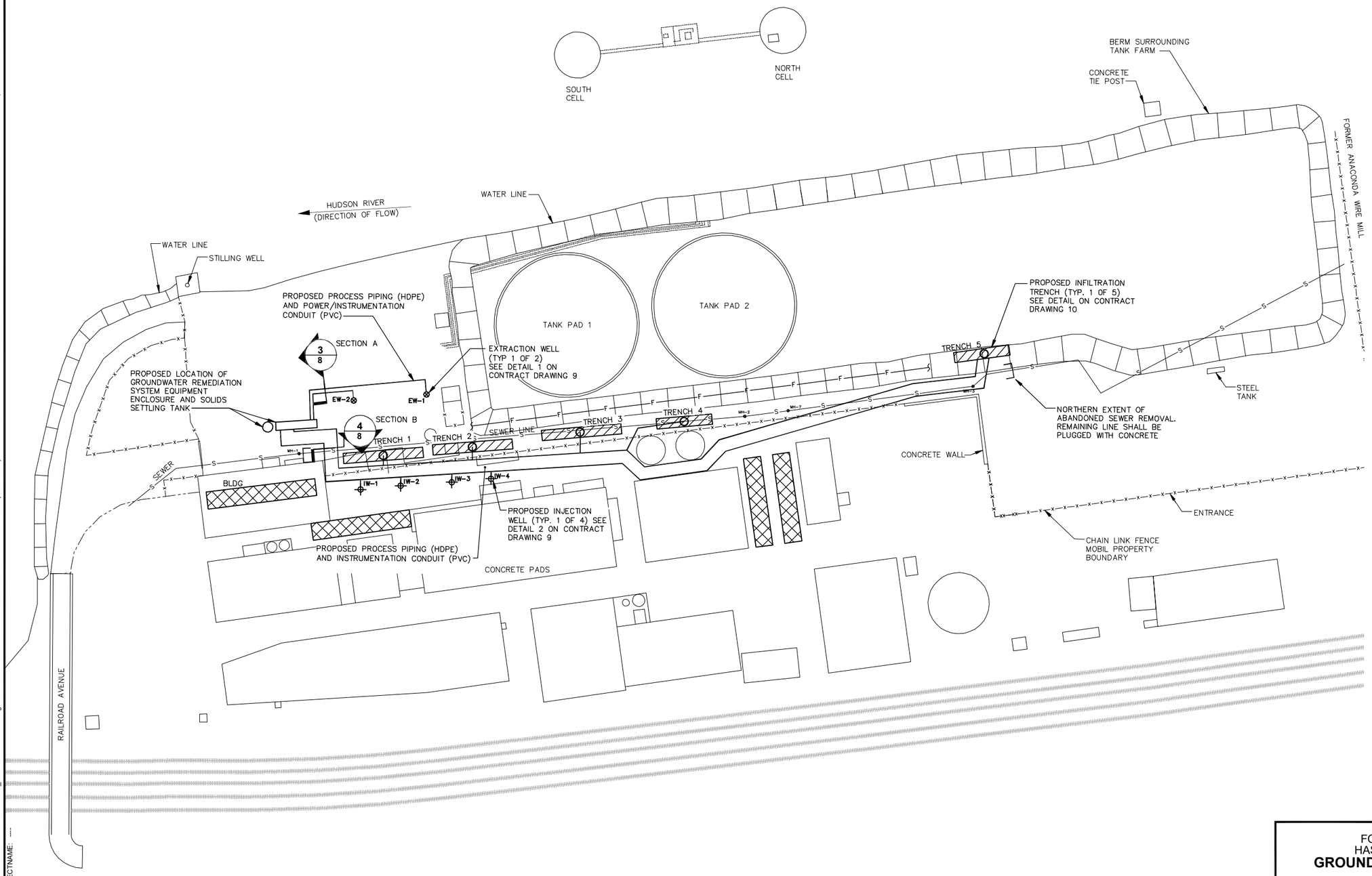

LEGEND:

MH-7 ●	SANITARY SEWER MANHOLE
—S—	SANITARY SEWER
	APPROXIMATE LOCATION OF INFILTRATION TRENCH
	SOIL STAGING/TREATMENT CELL
IW-1 ⊕	INJECTION WELL
EW-1 ⊗	EXTRACTION WELL
—x—	EXISTING FENCE
[ ]	EXTENT OF ABANDONED SEWER REMOVAL
—F—	APPROXIMATE LOCATION OF EXISTING ABANDONED FIRE WATER LINE

NOTES:

1. BASEMAP PROVIDED BY WOODARD & CURRAN, FIGURE 1, TITLED "GROUNDWATER CONTOUR PLAN", DATED JAN 2002.
2. LOCATIONS OF EXTRACTION WELLS, INJECTION WELLS, PIPE RUNS, AND INFILTRATION TRENCHES ARE APPROXIMATE. EXACT LOCATIONS TO BE FIELD DETERMINED AND ENGINEER APPROVED.
3. PORTIONS OF THE EXISTING FENCE MAY HAVE TO BE TEMPORARILY REMOVED AND REPLACED FOLLOWING CONSTRUCTION ACTIVITIES.
4. TREES AND VEGETATION NEAR AND AROUND WHERE SYSTEM COMPONENTS WILL BE INSTALLED AND ABANDONED SEWER LINE IS TO BE REMOVED SHALL BE CLEARED AND STOCK PILED.
5. RAILROAD AVENUE ACCESS POINT RESTRICTED TO FOOT TRAFFIC.
6. ACCESS AND EGRESS TO/FROM THE SITE SHALL BE CONTROLLED THROUGH THE ACCESS GATE TO THE NORTH OF THE SITE.

0 50' 100'
GRAPHIC SCALE

FORMER TAPPAN TERMINAL SITE
HASTINGS ON HUDSON, NEW YORK
GROUNDWATER REMEDIATION SYSTEM

COMMUNITY AIR MONITORING PLAN PROPOSED SOIL STAGING/TREATMENT CELLS

ARCADIS

FIGURE
2

CITY: SYRACUSE, NY DIV/GROUP:ENV/CADD DB: GMS KFS GMS K.SARTORI PIC:J.VOGELEY PM: W.MCCUNE TM: W.MCCUNE LYR:ON=*;OFF=*REF*
G:\ENVCAD\SYRACUSE\ACT\B0046918\0000\00006\DWG\95%_DESIGN\46918G13.dwg LAYOUT: 2SAVED: 3/3/2011 2:21 PM ACADVER: 18.0S (LMS TECH) PAGESETUP: D2B-PDF.PLOTSTYLETABLE: PLTCONT1.CTB PLOTTED: 3/3/2011 2:22 PM BY: BASSETT, RICHARD
XREFS: IMAGES: PROJECTNAME: ----
46918X01
46918XBL

Attachment A

Generic Community Air Monitoring Plan

Appendix 1A
New York State Department of Health
Generic Community Air Monitoring Plan

Overview

A Community Air Monitoring Plan (CAMP) requires real-time monitoring for volatile organic compounds (VOCs) and particulates (i.e., dust) at the downwind perimeter of each designated work area when certain activities are in progress at contaminated sites. The CAMP is not intended for use in establishing action levels for worker respiratory protection. Rather, its intent is to provide a measure of protection for the downwind community (i.e., off-site receptors including residences and businesses and on-site workers not directly involved with the subject work activities) from potential airborne contaminant releases as a direct result of investigative and remedial work activities. The action levels specified herein require increased monitoring, corrective actions to abate emissions, and/or work shutdown. Additionally, the CAMP helps to confirm that work activities did not spread contamination off-site through the air.

The generic CAMP presented below will be sufficient to cover many, if not most, sites. Specific requirements should be reviewed for each situation in consultation with NYSDOH to ensure proper applicability. In some cases, a separate site-specific CAMP or supplement may be required. Depending upon the nature of contamination, chemical- specific monitoring with appropriately-sensitive methods may be required. Depending upon the proximity of potentially exposed individuals, more stringent monitoring or response levels than those presented below may be required. Special requirements will be necessary for work within 20 feet of potentially exposed individuals or structures and for indoor work with co-located residences or facilities. These requirements should be determined in consultation with NYSDOH.

Reliance on the CAMP should not preclude simple, common-sense measures to keep VOCs, dust, and odors at a minimum around the work areas.

Community Air Monitoring Plan

Depending upon the nature of known or potential contaminants at each site, real-time air monitoring for VOCs and/or particulate levels at the perimeter of the exclusion zone or work area will be necessary. Most sites will involve VOC and particulate monitoring; sites known to be contaminated with heavy metals alone may only require particulate monitoring. If radiological contamination is a concern, additional monitoring requirements may be necessary per consultation with appropriate DEC/NYSDOH staff.

Continuous monitoring will be required for all ground intrusive activities and during the demolition of contaminated or potentially contaminated structures. Ground intrusive activities include, but are not limited to, soil/waste excavation and handling, test pitting or trenching, and the installation of soil borings or monitoring wells.

Periodic monitoring for VOCs will be required during non-intrusive activities such as the collection of soil and sediment samples or the collection of groundwater samples from existing monitoring wells. “Periodic” monitoring during sample collection might reasonably consist of taking a reading upon arrival at a sample location, monitoring while opening a well cap or

overturning soil, monitoring during well baling/purging, and taking a reading prior to leaving a sample location. In some instances, depending upon the proximity of potentially exposed individuals, continuous monitoring may be required during sampling activities. Examples of such situations include groundwater sampling at wells on the curb of a busy urban street, in the midst of a public park, or adjacent to a school or residence.

VOC Monitoring, Response Levels, and Actions

Volatile organic compounds (VOCs) must be monitored at the downwind perimeter of the immediate work area (i.e., the exclusion zone) on a continuous basis or as otherwise specified. Upwind concentrations should be measured at the start of each workday and periodically thereafter to establish background conditions, particularly if wind direction changes. The monitoring work should be performed using equipment appropriate to measure the types of contaminants known or suspected to be present. The equipment should be calibrated at least daily for the contaminant(s) of concern or for an appropriate surrogate. The equipment should be capable of calculating 15-minute running average concentrations, which will be compared to the levels specified below.

1. If the ambient air concentration of total organic vapors at the downwind perimeter of the work area or exclusion zone exceeds 5 parts per million (ppm) above background for the 15-minute average, work activities must be temporarily halted and monitoring continued. If the total organic vapor level readily decreases (per instantaneous readings) below 5 ppm over background, work activities can resume with continued monitoring.

2. If total organic vapor levels at the downwind perimeter of the work area or exclusion zone persist at levels in excess of 5 ppm over background but less than 25 ppm, work activities must be halted, the source of vapors identified, corrective actions taken to abate emissions, and monitoring continued. After these steps, work activities can resume provided that the total organic vapor level 200 feet downwind of the exclusion zone or half the distance to the nearest potential receptor or residential/commercial structure, whichever is less - but in no case less than 20 feet, is below 5 ppm over background for the 15-minute average.

3. If the organic vapor level is above 25 ppm at the perimeter of the work area, activities must be shutdown.

4. All 15-minute readings must be recorded and be available for State (DEC and NYSDOH) personnel to review. Instantaneous readings, if any, used for decision purposes should also be recorded.

Particulate Monitoring, Response Levels, and Actions

Particulate concentrations should be monitored continuously at the upwind and downwind perimeters of the exclusion zone at temporary particulate monitoring stations. The particulate monitoring should be performed using real-time monitoring equipment capable of measuring particulate matter less than 10 micrometers in size (PM-10) and capable of integrating over a period of 15 minutes (or less) for comparison to the airborne particulate action level. The equipment must be equipped with an audible alarm to indicate exceedance of the action level. In addition, fugitive dust migration should be visually assessed during all work activities.

1. If the downwind PM-10 particulate level is 100 micrograms per cubic meter (mcg/m^3) greater than background (upwind perimeter) for the 15-minute period or if airborne dust is observed leaving the work area, then dust suppression techniques must be employed. Work may continue with dust suppression techniques provided that downwind PM-10 particulate levels do not exceed 150 mcg/m^3 above the upwind level and provided that no visible dust is migrating from the work area.

2. If, after implementation of dust suppression techniques, downwind PM-10 particulate levels are greater than 150 mcg/m^3 above the upwind level, work must be stopped and a re-evaluation of activities initiated. Work can resume provided that dust suppression measures and other controls are successful in reducing the downwind PM-10 particulate concentration to within 150 mcg/m^3 of the upwind level and in preventing visible dust migration.

3. All readings must be recorded and be available for State (DEC and NYSDOH) and County Health personnel to review.

December 2009

Attachment B

Fugitive Dust Suppression and Particulate Monitoring Programs at Inactive Hazardous Waste Sites

Appendix 1B
Fugitive Dust and Particulate Monitoring

A program for suppressing fugitive dust and particulate matter monitoring at hazardous waste sites is a responsibility on the remedial party performing the work. These procedures must be incorporated into appropriate intrusive work plans. The following fugitive dust suppression and particulate monitoring program should be employed at sites during construction and other intrusive activities which warrant its use:

1. Reasonable fugitive dust suppression techniques must be employed during all site activities which may generate fugitive dust.

2. Particulate monitoring must be employed during the handling of waste or contaminated soil or when activities on site may generate fugitive dust from exposed waste or contaminated soil. Remedial activities may also include the excavation, grading, or placement of clean fill. These control measures should not be considered necessary for these activities.

3. Particulate monitoring must be performed using real-time particulate monitors and shall monitor particulate matter less than ten microns (PM10) with the following minimum performance standards:

(a) Objects to be measured: Dust, mists or aerosols;
(b) Measurement Ranges: 0.001 to 400 mg/m3 (1 to 400,000 :ug/m3);
(c) Precision (2-sigma) at constant temperature: +/- 10 :g/m3 for one second averaging; and +/- 1.5 g/m3 for sixty second averaging;
(d) Accuracy: +/- 5% of reading +/- precision (Referred to gravimetric calibration with SAE fine test dust (mmd= 2 to 3 :m, g= 2.5, as aerosolized);
(e) Resolution: 0.1% of reading or 1g/m3, whichever is larger;
(f) Particle Size Range of Maximum Response: 0.1-10;
(g) Total Number of Data Points in Memory: 10,000;
(h) Logged Data: Each data point with average concentration, time/date and data point number
(i) Run Summary: overall average, maximum concentrations, time/date of maximum, total number of logged points, start time/date, total elapsed time (run duration), STEL concentration and time/date occurrence, averaging (logging) period, calibration factor, and tag number;
(j) Alarm Averaging Time (user selectable): real-time (1-60 seconds) or STEL (15 minutes), alarms required;
(k) Operating Time: 48 hours (fully charged NiCd battery); continuously with charger;
(l) Operating Temperature: -10 to 50° C (14 to 122° F);
(m) Particulate levels will be monitored upwind and immediately downwind at the working site and integrated over a period not to exceed 15 minutes.

4. In order to ensure the validity of the fugitive dust measurements performed, there must be appropriate Quality Assurance/Quality Control (QA/QC). It is the responsibility of the remedial party to adequately supplement QA/QC Plans to include the following critical features: periodic instrument calibration, operator training, daily instrument performance (span) checks, and a record keeping plan.

5. The action level will be established at 150 ug/m3 (15 minutes average). While conservative,

this short-term interval will provide a real-time assessment of on-site air quality to assure both health and safety. If particulate levels are detected in excess of 150 ug/m3, the upwind background level must be confirmed immediately. If the working site particulate measurement is greater than 100 ug/m3 above the background level, additional dust suppression techniques must be implemented to reduce the generation of fugitive dust and corrective action taken to protect site personnel and reduce the potential for contaminant migration. Corrective measures may include increasing the level of personal protection for on-site personnel and implementing additional dust suppression techniques (see paragraph 7). Should the action level of 150 ug/m3 continue to be exceeded work must stop and DER must be notified as provided in the site design or remedial work plan. The notification shall include a description of the control measures implemented to prevent further exceedances.

6. It must be recognized that the generation of dust from waste or contaminated soil that migrates off-site, has the potential for transporting contaminants off-site. There may be situations when dust is being generated and leaving the site and the monitoring equipment does not measure PM10 at or above the action level. Since this situation has the potential to allow for the migration of contaminants off-site, it is unacceptable. While it is not practical to quantify total suspended particulates on a real-time basis, it is appropriate to rely on visual observation. If dust is observed leaving the working site, additional dust suppression techniques must be employed. Activities that have a high dusting potential--such as solidification and treatment involving materials like kiln dust and lime--will require the need for special measures to be considered.

7. The following techniques have been shown to be effective for the controlling of the generation and migration of dust during construction activities:

(a) Applying water on haul roads;
(b) Wetting equipment and excavation faces;
(c) Spraying water on buckets during excavation and dumping;
(d) Hauling materials in properly tarped or watertight containers;
(e) Restricting vehicle speeds to 10 mph;
(f) Covering excavated areas and material after excavation activity ceases; and
(g) Reducing the excavation size and/or number of excavations.

Experience has shown that the chance of exceeding the 150ug/m3 action level is remote when the above-mentioned techniques are used. When techniques involving water application are used, care must be taken not to use excess water, which can result in unacceptably wet conditions. Using atomizing sprays will prevent overly wet conditions, conserve water, and provide an effective means of suppressing the fugitive dust.

8. The evaluation of weather conditions is necessary for proper fugitive dust control. When extreme wind conditions make dust control ineffective, as a last resort remedial actions may need to be suspended. There may be situations that require fugitive dust suppression and particulate monitoring requirements with action levels more stringent than those provided above. Under some circumstances, the contaminant concentration and/or toxicity may require additional monitoring to protect site personnel and the public. Additional integrated sampling and chemical analysis of the dust may also be in order. This must be evaluated when a health and safety plan is developed and when appropriate suppression and monitoring requirements are established for protection of health and the environment.

Attachment C

Monitoring Equipment Specifications

MiniRAE 2000
Handheld VOC Monitor

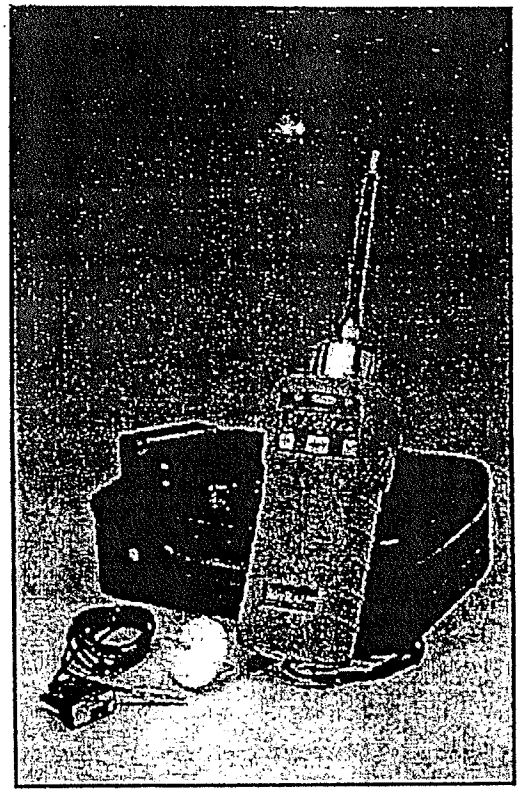

- Intrinsically safe
- Smallest handheld VOC monitor
- Datalogging workhorse

This VOC monitor with PID (photoionization detector) sensor weighs just over one pound, yet it's a heavyweight for leak detection, fugitive emissions monitoring to EPA Method 21 and inspecting leaking underground storage tanks. The MiniRAE 2000 is also a highly useful tool in industrial hygiene applications, including confined space entry, personnel and work place monitoring and for emergency response to hazardous spills. This rugged instrument comes with a belt clip.

With built-in correction factors for more than 100 chemicals, the MiniRAE 2000 provides excellent all-around sensitivity to most VOCs, down to 0.1 ppm. Selectable survey and hygiene modes permit the user to set appropriate alarm thresholds for STEL, TWA and low/high level peak values. Datalogging and custom software.

SPECIFICATIONS

Range	Resolution	Response Time	Accuracy
0 to 999 ppm	0.1 ppm	< 3 seconds	± 2 ppm or 10% of reading <2000 ppm
100 to 10,000 ppm	1 ppm	< 3 seconds	± 20% of reading > 2000 ppm Calibrated to 100 ppm isobutylene

Sampling Pump	Internal integrated flow rate 400 cc/minute Sample from 100' horizontally or vertically
Datalogging	15,000 points with time/date, header information
Approvals	UL and cUL Class I, Division 1, Groups A, B, C and D, EEx ia IIC T4
Battery	Rechargeable, field changeable NiMH battery pack, 10 hours operation
Dimensions (HWD)	2" x 3" x 8.2"
Weight	19.5 oz

RAE SYSTEMS MiniRAE 2000 PID rents with download cable, zero filter, probe tip, hydrophobic filter, charger, alkaline battery adapter, case and operating manual.

Equipment specifications cannot form any part of a contract to supply equipment.

ASHTEAD Technology

www.ashtead-technology.com

MIE DataRAM Aerosol Monitor
Portable Real-Time Particulate Monitor

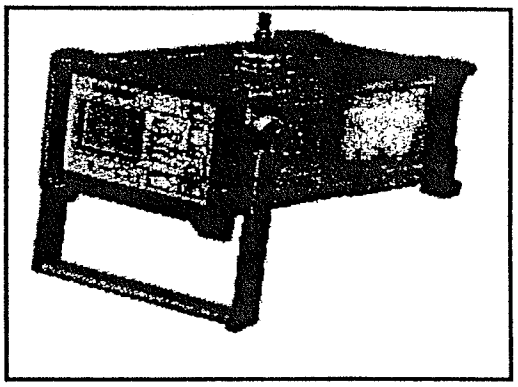

- **Real-time measurement of particle concentrations**
- **Datalogging**

The DataRAM aerosol monitor measures concentrations of airborne dust, smoke, mists, haze and fumes with real-time readout. The instrument can be used for exposure sampling of ambient air, continuous unattended monitoring of indoor, duct or process air, as well as environmental and perimeter monitoring. The DataRAM has the widest measurement range of any real-time aerosol monitor — from 0.0001 mg/m³ to 400 mg/m³, or a total span of almost seven decades.

OPTIONAL ACCESSORIES

Respirable Cyclone Precollector, for respirable particle monitoring.
Isokinetic Sampling Probe, for isokinetic sampling within ducts.
Temperature Conditioning Heater, for monitoring above 70 percent RH.
Omnidirectional Sampling Inlet, for ambient monitoring under a variety of wind speeds and directions.
PM-10 Inlet Head, for PM-10 or PM-2.5 ambient particulate monitoring.

SPECIFICATIONS

Concentration Measurement Ranges (autoranging)	0.1 to 999.99 µg/m³, with resolution of 0.1 µg/m³ 1.00 to 39.99 mg/m³, with resolution of 0.01 mg/m³ 40.0 to 399.9 mg/m³, with resolution of 0.1 mg/m³
Accuracy	± 5% of reading ± precision
Particle Size Range of Maximum Response	0.1 to 10 µm
Sample Flow Rate	1.7 to 2.3 lpm
Datalogging	10,000 data points, with average, minimum and maximum concentrations for each point
Output	RS-232 port
Power	Sealed lead-acid battery, 24 hours operation, or AC operation with adapter
Dimensions (HWD)	5.28" x 7.25" x 13.63"
Weight	11.7 lbs

The MIE DataRAM aerosol monitor rents with an AC adapter/charger, serial download cable, software, filter cassette, soft carrying case and operating manual.

Equipment specifications cannot form any part of a contract to supply equipment.
W002

Appendix D

Preliminary Implementation Schedule

Former Tappan Terminal Site
Hastings on Hudson, New York

Groundwater Remediation System

ID	Task Name	Duration	Start	Finish
1	**Pre-Construction Activities**	**86 days**	**Wed 3/14/12**	**Wed 7/11/12**
2	Final Design Submittal to Client and NYS DEC	1 day	Wed 3/14/12	Wed 3/14/12
3	NYS DEC and Client Review	1 mon	Thu 3/15/12	Wed 4/11/12
4	Contract Drawing Generation	2 wks	Thu 4/12/12	Wed 4/25/12
5	Contractor Selection	6 wks	Mon 4/2/12	Fri 5/11/12
6	Equipment Procurement	10 wks	Thu 4/26/12	Wed 7/4/12
7	Permitting	8 wks	Thu 4/26/12	Wed 6/20/12
8	Clearing and Grubbing	1 wk	Thu 6/21/12	Wed 6/27/12
9	Electrical Pole Installation/Electrical Drop	2 wks	Thu 6/28/12	Wed 7/11/12
10	**Construction Activities**	**64 days**	**Thu 7/12/12**	**Tue 10/9/12**
11	Mobilization	3 days	Thu 7/12/12	Mon 7/16/12
12	Utility Location and Markout	2 days	Tue 7/17/12	Wed 7/18/12
13	Equipment and Electrical Transformer Concrete Pads Install	2 wks	Thu 7/19/12	Wed 8/1/12
14	Well Drilling/Installation	2 wks	Thu 7/19/12	Wed 8/1/12
15	Pipe Trenches/Infiltration trenches Excavation and Disposal	2 wks	Thu 8/2/12	Wed 8/15/12
16	Containment/Decontamination Areas Install	2 wks	Thu 8/16/12	Wed 8/29/12
17	Trench/Infiltration/Well Piping/Conduit and Mechanical Install	2 wks	Thu 8/30/12	Wed 9/12/12
18	Settling Tank Deliverly	1 day	Thu 9/13/12	Thu 9/13/12
19	Equipment Enclosure Deliverly	1 day	Thu 9/13/12	Thu 9/13/12
20	Equipment Enclosure/Settling Tank Placement, Grounding, and Anchoring	1 day	Fri 9/14/12	Fri 9/14/12
21	Electrical Connection	8 days	Mon 9/17/12	Wed 9/26/12
22	Equipment Enclosure Influent/Effluent Piping Connection/Insulation	8 days	Mon 9/17/12	Wed 9/26/12
23	Equipment Pad Fence Install	4 days	Thu 9/27/12	Tue 10/2/12
24	Site Restoration	2 days	Wed 10/3/12	Thu 10/4/12
25	Demobilization	3 days	Fri 10/5/12	Tue 10/9/12
26	**Post-Construction Activities**	**8 days**	**Wed 10/10/12**	**Fri 10/19/12**
27	System Integration	4 days	Wed 10/10/12	Mon 10/15/12
28	System Start-up	4 days	Tue 10/16/12	Fri 10/19/12

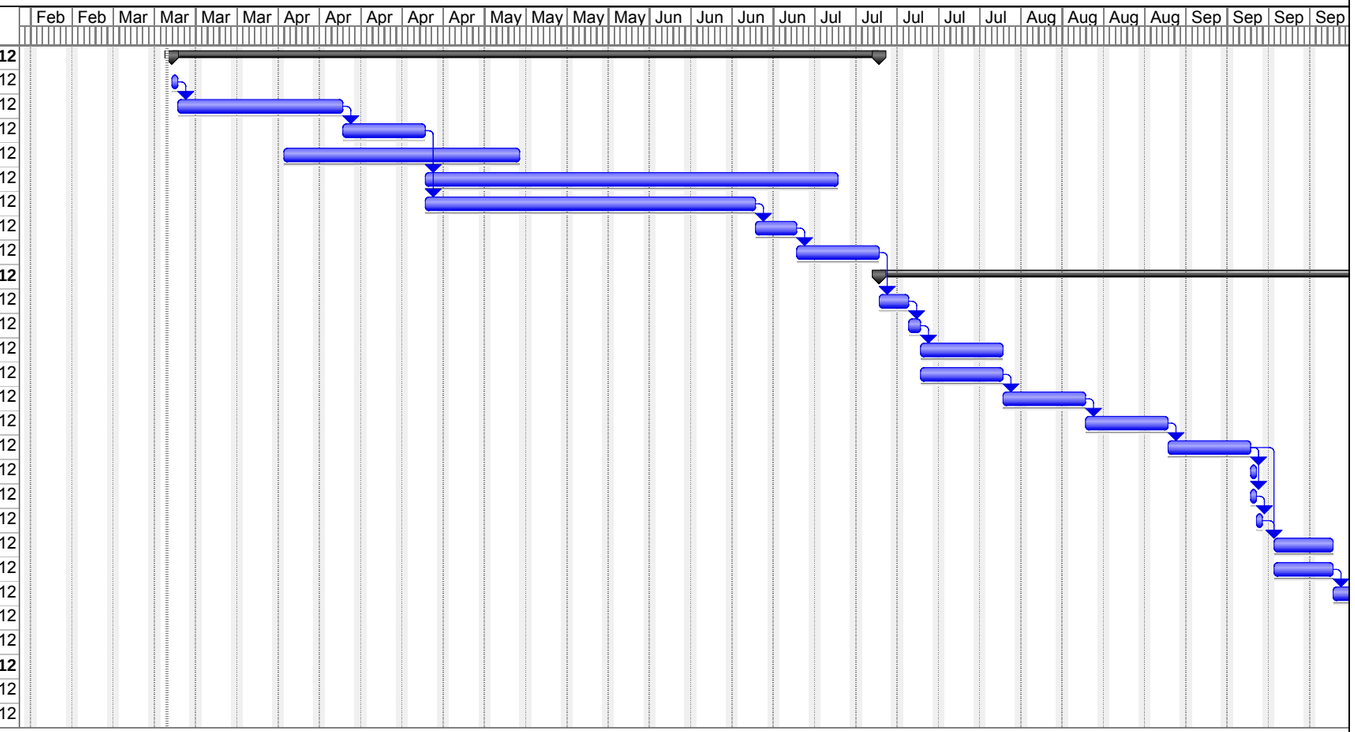

Project: 0641112161
Date: Tue 3/13/12

Task | Progress | Summary | External Tasks | Deadline
Split | Milestone | Project Summary | External Milestone

APPENDIX H

Well Construction Information

Former Mobil Tappan Terminal
AOC1, Former Tappan Terminal
Hastings-on-Hudson, New York

Well ID		Year Installed	Well Diameter (inches)	Total Depth (feet)	Screen Length (feet)	Comments
ExxonMobil Wells (AOC1)	MW-1A	1993	4	11	10	Well extended above cap
	MW-4	1986	4	11	10	Well extended above cap
	MW-5	1986	4	10	10	Well extended above cap
	MW-6R	2012	2	10.5	10	Well replaced by others for AOC3
	MW-7A	1993	4	11	10	Well extended above cap
	MW-9A	1993	4	12	10	Well extended above cap
	MW-10R	2012	2	13	10	Well replaced by others for AOC3
	MW-12R	2012	2	13	10	Well replaced by others for AOC3
	MW-15	1994	4	11	10	Well extended above cap
	MW-16	1994	4	11	10	Well extended above cap
	MW-17	1994	4	13	10	Well extended above cap
	MW-D1	1988	4	66.5	20	Well extended above cap
	MW-S1	1988	6	28	20	Well extended above cap
	OW-5AR	2012	2	13	10	Well replaced by others for AOC3
	OW-8R	2013	2	13	10	Well replaced by others for AOC3
	OW-9A	1994	4	12	10	Well extended above cap
	OW-12	1986	2	15	14	Well extended above cap
	OW-15	1986	2	16	14	Well extended above cap
	OW-18	1986	2	11	10	Well decommissioned by others for AOC3
	OW-19A	1993	4	11	10	Well extended above cap
	OW-20	1986	2	12	10	Well extended above cap
	OW-25	1986	2	11	10	Well extended above cap
	OW-27A	1993	4	11	10	Well extended above cap
	SVE Well	2002	4	7	5	Well extended above cap
	AS-1	2002	2	23	3	Well extended above cap
	AS-2	2004	2	20	5	Well extended above cap
	MW-T1	2002	4	20	15	Well extended above cap
	MW-T2	2002	2	20	15	Well extended above cap
	MW-T3	2002	2	23	20	Well extended above cap
	MW-T4 (MW-1/TW4)	2004	2	20	15	Well extended above cap
	MW-T5 (MW-2/TW5)	2004	2	20	15	Well extended above cap
	MW-T6	2004	2	20	15	Well decommissioned by others for AOC3
Wells Installed by Others (AOC3)	AB-MW-1R	2012	2	13	10	Well installed by others for AOC3
	AB-MW-2	2008	2	13	10	Well installed by others for AOC3
	AB-MW-3	2008	2	13	10	Well installed by others for AOC3
	AB-MW-4	2008	2	18	15	Well decommissioned by others for AOC3
	AB-MW-5	2008	2	18	15	Well decommissioned by others for AOC3
	AMW-6	2012	2	15	10	Well installed by others for AOC3
	AMW-7	2012	2	14	10	Well installed by others for AOC3
	AMW-8	2013	2	14	10	Well installed by others for AOC3
	AMW-9	2012	2	13	10	Well installed by others for AOC3
	EW-1	2012	6	20	5	Well installed by others for AOC3
	EW-2	2012	6	20	5	Well installed by others for AOC3
	MW-T3E	2008	2	20	15	Well installed by others for AOC3
	MW-T3S	2008	2	19.5	15	Well installed by others for AOC3
	MW-T3N	2008	2	18	15	Well installed by others for AOC3
	MW-T3W	2008	2	19	15	Well installed by others for AOC3
	MW-T4E	2008	2	19.5	15	Well installed by others for AOC3
	MW-T4N	2008	2	19.5	15	Well installed by others for AOC3
	MW-T4S	2008	2	19.5	15	Well installed by others for AOC3
	MW-T4W	2008	2	19.5	15	Well installed by others for AOC3
	OW-12E	2008	2	18	15	Well decommissioned by others for AOC3
	OW-12N	2008	2	18	15	Well decommissioned by others for AOC3
	OW-12S	2008	2	19	15	Well decommissioned by others for AOC3
	OW-12SW	2009	2	17	15	Well installed by others for AOC3
	OW-12W	2008	2	17	15	Well installed by others for AOC3

APPENDIX I

QUALITY ASSURANCE PROJECT PLAN (QAPP)

Former Tappan Terminal
Hastings-on-Hudson, New York

June 15, 2010

TABLE OF CONTENTS

SECTION **PAGE NO.**

1.0 Introduction 1

2.0 Project Management 2

3.0 Measurement Data Acquisition 8

4.0 Assessment/Oversight 18

5.0 Data Validation and Useability 20

FORM **PAGE NO.**

Form A Title and Approval Page 3

Form B Project Organization and Responsibility/Distribution List 4

Form C Problem Definition 6

Form C Problem Definition 6

Form D Project Description 7

Form E Sampling Design 9

Form F – 1 Method and SOP Reference Table 10

Form F-2 Sampling and Analytical Methods Requirements 10

Form G Preventive Maintenance – Field Equipment (1) 11

Form H Calibration and Corrective Action – Field Equipment (1) 12

Form I Preventive Maintenance – Laboratory Equipment 13

Form J Calibration and Corrective Action – Laboratory Equipment 13

Form K Sample Handling and Custody Requirements 13

Form L Analytical Precision and Accuracy 14

ForM M Field Quality Control Requirements 15

Form N Data Management and Documentation 17

Form O Assessment and Response Actions 19

Form P Project Reports 19

Form Q-1 Verification of Sampling Procedures 21

Form Q-2 Data Verification and Validation 22

Form R Data Usability 25

ATTACHMENTS

Attachment A: Project Sampling SOPs

Attachment B: Analytical Laboratory SOPs

1.0 INTRODUCTION

This Quality Assurance Project Plan (QAPP) includes the following four basic element groups: Project Management, Measurement Data Acquisition; Assessment/Oversight; and Data Validation and Usability. This QAPP follows EPA's Quality Assurance Guidance for Conducting Brownfields Site Assessments (EPA 540-R-98-038) and is incorporated within the remedial design work scope ("Field Work Scope") for the former Mobil terminal property in Hastings-on-Hudson, New York.

This QAPP is applicable only to the work specified. Revisions to the QAPP for additional work or changes to the Field Work Scope will be made and approved in accordance with standard Woodard & Curran Inc. practices and submitted to ExxonMobil Refining & Supply, the present owner of the subject property, for approval. Notification and distribution of any changes will be conducted by Woodard & Curran.

2.0 PROJECT MANAGEMENT

This element group encompasses aspects of project management, objectives and background. It identifies the roles and responsibilities of project personnel, describes communication procedures and details the proposed project schedule.

FORM A

TITLE AND APPROVAL PAGE

Quality Assurance Project Plan (QAPP) for Work Associated with the former Tappan Terminal
Document Title

Anne Proctor **Woodard & Curran**
Prepared by: Preparer's Name and Organizational Affiliation)

1520 Highland Avenue
Cheshire, CT 06410 **(203) 271-0379**
Address and Telephone Number

_____
Day/Month/Year

Project Manager: _____
Signature

Anne E. Proctor - Woodard & Curran
Printed Name/Date

Project Director: _____
Signature

Nicholas A. Hastings – Woodard & Curran
Printed Name/Date

FORM B

PROJECT ORGANIZATION AND RESPONSIBILITY/DISTRIBUTION LIST

Woodard & Curran of Cheshire, Connecticut was retained by ExxonMobil to provide environmental consulting services for the former Tappan Terminal property in Hastings-on-Hudson, New York.

ExxonMobil Refining & Supply			
Steve Trifiletti	Global Remediation	(516) 239-5232	steve.p.trifiletti@exxonmobil.com

NYSDEC			
William Ports	Div. of Environmental Remediation	(518) 402-9667	wfports@gw.dec.state.ny.us

Woodard & Curran			
Nick Hastings	Project Director, Regulatory Specialist	(203) 271-0379 Ext: 2305	nhastings@woodardcurran.com
Anne Proctor	Project Manager, Project QA Officer	(203) 271-0379 Ext: 2327	aproctor@woodardcurran.com

Roux Associates			
Tracy Bispham	Project Field Task Manager	(631) 232-2600	tbispham@rouxinc.com

Laboratory			
Accutest Dayton, NJ	Laboratory Services	(732) 329-0200	www.**accutest**.com

Effective communication between all parties will be critical to ensure project goals are met. It will be the responsibility of the Project Manager to maintain communications internally and externally. The Project Manager will be in frequent contact with project personnel to keep the project team informed as to progress and potential changes as project activities are conducted.

All project personnel will communicate frequently to ensure field activities and reporting requirements are in accordance with this QAPP. Daily calls will be conducted to facilitate communication and evaluate progress. During field activities, field personnel will communicate with the Project Field Task Manager as needed.

Scheduling information, billing and any changes to the QAPP or work scope will be communicated to subcontractors by the Project Manager or Project Field Task Manager. Subcontractors must immediately report any problems to the Project Field Task Manager.

Project Organization and Communication Chart

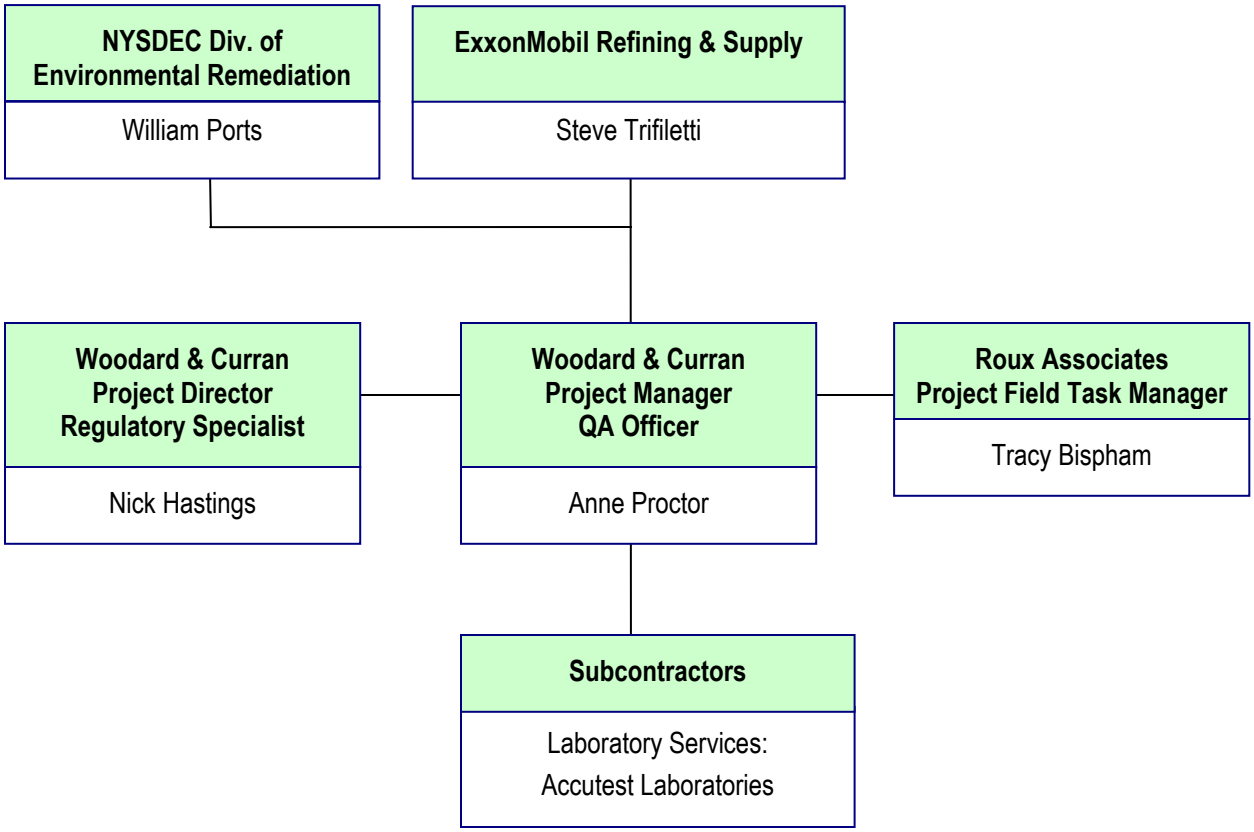

FORM C

PROBLEM DEFINITION

The subject property is owned by ExxonMobil and is presently vacant, pending approval for redevelopment by NYSDEC and ExxonMobil. A Record of Decision (ROD) was issued by the NYSDEC in September 2006. Historic investigation programs and requirements of the ROD were used to develop a Remedial Design/Remedial Action Work Plan (the "Work Plan") for the former Mobil terminal property. The Work Plan was developed to refine delineation and/or remove "grossly contaminated soil" (see Work Plan Section 3.2).

FORM D

PROJECT DESCRIPTION

The Remedial Design/Remedial Action Work Plan includes the following tasks:

- Grossly contaminated soil (as defined in Section 3.2 of the Work Plan) will be excavated by backhoe for characterization and proper offsite disposal. The anticipated excavation area is indicated in Figure 3 in the Work Plan. Limits of the excavation, side walls and bottom, will be sampled and analyzed for SVOCs by EPA Method 8270. Sidewall and base samples will be collected at a rate of one every 20 linear feet of excavation.

- Concrete pads and structures will be rubblized and demolished in place using an excavator with hoe ram attachment, or other appropriate means.

- Nine (9) test pits will be excavated by backhoe or excavator as depicted on Figure 4 in the Work Plan. If visual observations or field screening (shake test results) indicated gross impact, the soil will be removed until no further evidence of gross impact is noted. The limits of the excavation will be sampled as specified above and analyzed for SVOCs by EPA Method 8270.

- Excavations will be fenced off until laboratory results are received and it is confirmed that the end point samples are all less than 500 ppm total SVOCs. If analytical results indicate an exceedance of the SVOC criteria, additional iterations of excavation and sampling will be conducted until all sample results are below criteria.

- Once the excavation results indicate no further grossly contaminated soil, the excavation will be backfilled using clean onsite soil or imported backfill, and the site grade restored.

- Surface and subsurface piping will be identified and removed for offsite recycling or disposal.

- The Site perimeter fence will be restored as able and posted with No Trespassing signs to control access. The Site will be maintained in a secure state until future development plans are finalized, at which time the final remedy will be implemented (see Work Plan Section 4.0).

3.0 MEASUREMENT DATA ACQUISITION

This element group describes the design and implementation of measurement systems that will be used during the project. Sampling procedures, analytical methods/procedures, and data handling and documentation procedures are described in this section. Field sampling SOPs are included in **Attachment A**. Analytical laboratory SOPs are included in **Attachment B**.

FORM E

SAMPLING DESIGN

The proposed Work Plan includes investigative and remedial tasks. The proposed tasks include the following specific and related tasks:

- Removal of grossly contaminated soil and subsequent confirmatory soil sampling;
- Excavation of test pits and the collection of investigative soil samples; and
- Assessment of subsurface piping and structures.

Soil sampling, including the number of samples and analytical parameters, are outlined in the Work Plan. The work is designed to identify the presence/absence of areas where SVOCs exceed 500 ppm. A site map showing the proposed excavation location is included as Figure 3 in the Work Plan. A site map showing the proposed test pit locations is included as Figure 4 in the Work Plan.

Equipment and methods used will be applied consistently from one test pit to another in order to maximize data comparability. If it becomes necessary to deviate from customary methodology, the effects of such change will be examined and documented for future reference.

Individuals responsible for conducting sampling and analysis of soil will be familiar with the Work Plan and QAPP prior to performing their duties. Individuals conducting field work will have completed OSHA 40-hour training. Training records will be provided upon request.

FORM F – 1
METHOD AND SOP REFERENCE TABLE

Analytical Method Reference: Include document title, method name/number, revision number, date	Project Analytical SOPs: [1] Include document title, date revision number, and originator's name
1a. SW-846, Semi-Volatile Organic Compounds, Method 8270C	1b. SOP for Test Method 8270C, Rev. 3, December 1996, Accutest Laboratories

Project Sampling SOPs:[2] Include document title, date, revision number, and originator's name
1c. SOP for Test Pit Sampling, SOP No. S-6, Rev. 2, April 2002, W&C
2c SOP for Equipment Decontamination, SOP No. S-4, Rev. 2, April 2002, W&C
3c. SOP for Air Monitoring, SOP No. S-9, Rev. 2, April 2002, W&C

Notes:

1. Analytical Laboratory SOPs are included in Attachment B of this document.
2. Project Sampling SOPs are included in Attachment A of this document.

FORM F-2
SAMPLING AND ANALYTICAL METHODS REQUIREMENTS

Parameter	Matrix	Number of Samples (include field QC)	Analytical Method(1)	Sampling SOP(1)	Containers per Sample (number, size and type)	Preservation Requirements (temperature, light, chemical)(2)	Maximum Holding Time at Lab (preparation/ analysis)
SVOCs	Soil	TBD	1a	1c	1, 8oz. glass jar Teflon cap	4°C	Extract in 14 days Analyze in 40 days

Notes:

1. Form F-1 contains the Method and SOP Reference Table
2. Sample containers to be pre-preserved by the laboratory

FORM G

PREVENTIVE MAINTENANCE – FIELD EQUIPMENT (1)

Instrument	Activity	Frequency	SOP Ref.(2)
Photo-ionization detector	Check charge/Battery Replace Filter Clean Lamp Window	Daily As needed As needed	Manual
O2/LEL Meter	Check charge/Battery Replace Filter	Daily As needed	Manual

Notes:

1. Field crews responsible for daily maintenance as per manufacturer's specifications outlined in equipment manuals.
2. All operation and maintenance procedures will be in accordance with manufacturer's specifications as outlined in the equipment manual.

FORM H

CALIBRATION AND CORRECTIVE ACTION – FIELD EQUIPMENT (1)

Instrument	Activity	Frequency	Acceptance Criteria	Corrective Action	SOP Ref. (2)
Photo-ionization detector	Field Screening and Air Monitoring	Calibrate beginning and end of day Calibration Checks throughout the day	75 to 125% Response to 100 ppm Isobutylene Calibration Standard	Perform filter change and battery check, recalibrate instrument. If still out of range clean lamp window then recalibrate instrument. Lastly, if still out of range call vendor for troubleshooting guidance or a replacement instrument.	Manual
O2/LEL Meter	Field Screening and Air Monitoring	Calibrate once/day Calibration Checks as needed	75 to 125% Response to Calibration Standard	Perform filter change, battery check, and flow check, then recalibrate instrument. If still out of range call vendor for troubleshooting guidance or a replacement instrument.	Manual

Notes:

1. Field crews responsible for daily maintenance as per manufacturer's specifications outlined in equipment manuals.
2. All operation and maintenance procedures will be in accordance with manufacturer's specifications as outline in equipment manual.

FORM I

PREVENTIVE MAINTENANCE – LABORATORY EQUIPMENT

The purpose of this section is to delineate the SOPs/methods used to ensure the optimum performance of laboratory equipment. All laboratory equipment should be maintained in accordance with each respective instrument manufacturer's operating instructions with all maintenance activities recorded. The selected laboratory, Accutest, will provide the analytical support for Field Work Scope. Consequently, the analytical laboratory is responsible for performing preventative maintenance on the laboratory equipment. The analytical laboratory is required to follow their quality assurance program, including preventative maintenance. Form F-1 of this QAPP contains the Method Reference Table.

FORM J

CALIBRATION AND CORRECTIVE ACTION – LABORATORY EQUIPMENT

The purpose of this section is to define the analytical techniques that will ensure the laboratory instrumentation employed will accurately and precisely quantitate the analytes of concern. The analytical laboratory will provide this information upon request for any target compounds such that the data objectives of the Field Work Scope and QAPP are supported. Additionally, the analytical laboratory will be required to submit and follow their approved quality assurance program, including calibration and corrective action procedures for laboratory equipment. Form F-1 of this QAPP contains the Method Reference Table.

FORM K

SAMPLE HANDLING AND CUSTODY REQUIREMENTS

All samples collected will be immediately placed on ice in a sample cooler to fulfill the necessary preservation requirements. At the end of each work day, samples will be shipped to the analytical laboratory by courier.

A Chain of Custody (COC) program will be utilized during sample collection, handling and transport. The COC program is designed to ensure that each sample is properly handled and accounted for at all times from collection in the field to the analysis at the laboratory. In addition to the COC, sample collection will be documented in site-specific field log books and each sample will be individually labeled. Labeling of each sample will consist of: sample identification, source of sample, date and time collected, the initials of personnel collecting the sample, the analysis required, and the preservation method. The purpose of this program is to ensure that each sample is analyzed for the correct parameters and protected from loss, damage or contamination. COC forms will be placed in the sample coolers with the respective samples for transport to the laboratory.

FORM L

ANALYTICAL PRECISION AND ACCURACY

Analytical precision and accuracy for each method can be found in the SOP referenced in Form F-1 of this document. Applicable information includes the analytical method and equipment required, laboratory decontamination procedures, and specific performance requirements such as detection limits, quantitation limits, precision requirements and accuracy requirements. Detection limits will be based upon the laboratory-calculated detection limits.

FORM M

FIELD QUALITY CONTROL REQUIREMENTS

QC Sample	Frequency	Acceptance Criteria	Corrective Action
Duplicate	One per every 20 samples collected (Blind duplicate)	RPD ≤ 40% for soil/sediment samples	Review field notes and determine if data is useable and/or reanalysis is required.
Matrix Spike/ Matrix Spike Duplicate	One set per 20 samples collected.	RPD ≤ 30% for soil/sediment samples	Results will be qualified or rejected.
Temperature Blank	One per sample cooler	4^0C +/- 2^0	Results will be qualified or rejected.
Equipment Inspection	Each item prior to use	Physical integrity, contains proper preservative.	Discard item.
Reagent/Method Blanks	Each group of samples (Maximum of 20 samples per group). GC/MS spiked with surrogates 1 out of 10.	Positive sample results less than two times (2X) the method detection limit.	Halt analysis. Locate the source of contamination; correct problem; reanalyze method blank.
Replicate Sample	One out of every 15 samples.	Within RPD established control limits.	Reanalyzed for parameter in question.
Laboratory Control Sample (LCS)	Every 20 samples.	Laboratory and/or manufacturer established acceptance ranges.	Reanalyze associated samples.

QC Sample	Frequency	Acceptance Criteria	Corrective Action
Continuing Calibration Verification	Each group of samples.	Within % Recovery control limits.	Locate and correct source of error. Reanalyze check standard.
Matrix Spike	Every 20 samples or every batch whichever is less.	Accuracy, as defined by % Recoveries, within laboratory established quality control limits.	Sample set reanalyzed for parameter in question.
Surrogate Analysis	All method blanks and samples.	% Recovery meet laboratory established control limit acceptance criteria (established quarterly).	Locate and correct source of error. Reanalyze internal standard. Determine if reanalysis is required.
Internal Standards	All samples and method blanks.	% Recovery meet Laboratory Established control limit acceptance criteria (established quarterly).	Locate and correct source of error. Reanalyze internal standard. Determine if reanalysis is required.

FORM N

DATA MANAGEMENT AND DOCUMENTATION

Following receipt of laboratory analytical reports, each report will be reviewed to confirm that relevant laboratory quality control/quality assurance documentation is included. The laboratory will provide the following minimum data with each package:

- Data Results Sheets (include any performance evaluation sample results)
- Surrogate Recoveries and Acceptance Limits
- Matrix Spike/Matrix Spike Duplicate Results and Acceptance Limits
- Spike/Duplicate Results and Acceptance Limits
- Laboratory Control Sample Results and Acceptance Limits
- ICP Serial Dilution Results
- ICP Interference Check Sample Results
- Project Narrative which contains all observations and deviations

All laboratory results will be delivered to Woodard & Curran both electronically (i.e., Excel and GIS/Key electronic data deliverables) and in hard-copy form. Raw data including chromatograms and copies of internal COCs will be maintained by the laboratory.

Field data will be recorded in bound field log books to maintain a permanent record of all field activities. Information will include date, weather conditions, individuals on-site, field screening results, sampling observations and techniques, and any additional relevant information. All field notes and photographs will be maintained and stored in dedicated project files according to the Woodard & Curran Project Records Retention System.

4.0 ASSESSMENT/OVERSIGHT

This element group of the QAPP details procedures used to ensure implementation of the QAPP. It describes minimum requirements for quality assurance for management and final project reports.

FORM O

ASSESSMENT AND RESPONSE ACTIONS

Throughout the course of the project, Woodard & Curran will implement the following procedures to detect and correct problems that may occur:

- project management meetings (daily/weekly calls or as needed);
- peer review of all reports, documents, and correspondence; and
- ongoing communication between Woodard & Curran's project team, ExxonMobil and the NYSDEC.

As warranted, problems that occur will be communicated by project memorandums and telephone conversations. All memorandums and telephone notes will detail the problem encountered and any corrective actions taken. All documentation will be maintained in dedicated project files.

Changes to the QAPP will be made under the direction of the Project Manager and carried out by the appropriate project personnel.

FORM P

PROJECT REPORTS

Following implementation of the Field Work Scope and receipt and analysis of analytical data, a Report will be prepared to document all activities conducted during the Field Work Scope implementation as well as conclusions made and status of the various aspects of the investigation. Additional detailed reports will be prepared to document the conduct and findings of subsurface investigations performed at the site, if warranted.

5.0 DATA VALIDATION AND USEABILITY

This element group details the quality assurance activities that will be performed to ensure that the collected data are scientifically defensible, properly documented, of known quality, and meet the project objectives. Analytical data collected will be validated to 10% by an outside data validation contractor in accordance with the NYSDEC Data Usability Summary Report (DUSR) guidelines.

FORM Q-1

VERIFICATION OF SAMPLING PROCEDURES

Upon completion of the Field Work Scope, all data collected will be verified to ensure that sampling SOPs were adhered to and that specified samples were collected and analyzed for specified parameters. This evaluation will include (but is not limited to) the following:

- identify all samples;
- compare to samples documented in field log books;
- compare to Chain of Custody;
- check analytical parameters with those specified in the Field Work Scope;
- check detection limits with those specified in this QAPP; and
- review laboratory and field quality assurance and quality control (QA/QC) sample results.

FORM Q-2

DATA VERIFICATION AND VALIDATION

This section of the QAPP describes the process that will be followed to verify and validate the project data.

Internal Verification

Prior to release by the off-site laboratory, the data will be reviewed internally against all specific QA/QC parameters. The laboratory will perform analyses and review QA/QC consistent with the requirements of the specific laboratory method SOPs. Any deviations will be documented and explained in the final report. The off-site laboratory is responsible for the final results and overall quality of the data.

External Verification

Data validation to 10% of samples will be performed by an outside data validation contractor in accordance with the NYSDEC DUSR guidelines.

Validation

Validation of measurements is a systematic process of reviewing a body of data to provide assurance that the quality is adequate for the intended use. The validation process includes the following activities, as an example:

- Reviewing QC activities and results;
- Screening data sets and quality control results for outliers;
- Reviewing field sample data records and chains-of-custody;
- Reviewing sample handling and preservation procedures; and
- Verifying the above process.

Quality control results will also be compared against acceptance criteria described on Form M of this QAPP to determine completeness and to assess analytical control, precision, matrix effects or other interferences that could affect the quality of sample results. Specific quality control components, which will be evaluated in the validation procedures, include:

- Sampling and analysis date;
- Sample custody;
- Holding times;
- Sample preservation;
- Field and laboratory duplicate sample results;
- Surrogate recoveries;
- Matrix spike/matrix spike duplicate results;

- Laboratory control standards; and
- Laboratory method blanks and lot assignment reports.

The laboratory will also provide a case narrative indicating that the following parameters were reviewed as part of the sample analyses and the outcome of that review:

- Tune summaries
- Initial Calibration (ICAL)
- Continuing Calibration Verification (CCV)
- Internal standards
- Prep sheets (analytical batch sheets)
- Instrument log sheets

The laboratory case narrative will be reviewed during the data validation process and pending the outcome of that review the Project Manager will determine if additional validation activities are warranted.

DATA QUALIFIERS

Once sample concentrations have been through the data validation process, data qualifiers will be added, as necessary. Data qualifiers indicate that the reported sample concentration is below the detection limit, is estimated, or is rejected depending upon analytical conditions at the time of sample analysis. Specific data qualifiers, which may be applied as a result of data validation, include the following:

U - The analyte was not detected above the quantitation limit (QL).

J - The analyte was detected but the associated reported concentration is approximate and is considered estimated.

R - The reported analyte concentration is rejected due to serious deficiencies with associated quality control results. The presence or absence of the analyte cannot be confirmed.

UJ - The analyte was not detected above the QL. However, due to quality control results that did not meet acceptance criteria, the quantitation limit is uncertain and may not accurately represent the actual limit.

All analyte concentrations will be reported to the QL. Sample detections below the QL will be reported with a "J" qualifier.

DATA REPORTING

After data qualifiers have been added to the data set, an electronic version of the validated off-site laboratory data will be entered into a database in a format that is then available for interpretation.

Information for each sample that is entered into the database will include, but is not limited to the following:

- Sample identification number;

- Date sampled;
- Analytical method;
- Analyte name;
- Reporting units;
- Quantitation limit (QL);
- Analytical results;
- Validation qualifiers; and
- Any required footnotes.

Data validation will be performed by an entity independent of the laboratory generating the data.

FORM R

DATA USABILITY

Assessing data usability involves the process of reviewing and validating laboratory data and assessing whether it meets the prescribed project quality objectives. The environmental quality data to be collected throughout the execution of the Field Work Scope have specific end uses. For example, field screening data will be used to delineate excavation areas or to clear areas for redevelopment. Data will also be incorporated into the body of historical environmental data that has been collected for the property.

The validated data will be evaluated in terms of its precision, accuracy, representativeness, sensitivity, completeness, and comparability (PARCC).

The following subsections describe the measurement performance criteria and data usability for this investigation. In general, if issues with data quality are found in the data sets, they will be discussed and reviewed with the project team (including the laboratory, ExxonMobil and NYSDEC). If data quality is determined to be compromised for any given sampling event, a data quality assessment will be included in the applicable project reports. This assessment will evaluate the potential impact on the project, establish limitations of the data, and propose corrective actions, as appropriate.

Precision

Precision is a measure of the mutual agreement among individual measurements of the same property under prescribed conditions. Precision is measured by performing duplicate measurements in the field or laboratory and is expressed in terms of Relative Percent Difference (RPD).

Field and analytical duplicates have been incorporated into the program to assess the precision of the data. Field duplicate imprecision might be a reflection of several factors including: laboratory imprecision, sampling technique, decontamination procedures, and/or heterogeneity of contaminant distribution within the matrix. Analytical duplicates are a direct indication of laboratory precision.

The QC requirements, acceptance criteria, and potential corrective actions for field and laboratory duplicates are described on Form M. If data validation and assessment indicates that field and/or laboratory duplicates do not meet measurement performance criteria for precision, the potential impact on the project will be evaluated in the data quality assessment included in the applicable project reports. This data quality assessment will establish limitations and potential corrective actions for the affected data. If field duplicates appear to be the source of imprecision, sampling procedures may be re-evaluated and adjusted accordingly for future sampling and analysis events. If poor precision is indicated in analytical duplicates, laboratory QA/QC procedures may need to be reviewed.

Accuracy/Bias

Accuracy/Bias is the degree of agreement of a measurement with an accepted reference or true value and is usually expressed in terms of Percent Difference (%D) or Percent Recovery (%R). Accuracy is a measure of the bias of a system.

Routine calibration checks of field instrumentation are performed to assess the accuracy of field measurements. Equipment and trip blanks collected during field sampling activities measure accuracy by

assessing potential contamination introduced during sample collection and transport. In the laboratory, initial calibrations, initial/continuing calibration verifications (ICVs/CCVs), sample matrix spike/matrix spike duplicates (MS/MSDs), internal standards (IS), sample surrogate recoveries, and laboratory control samples (LCS) are performed/checked to evaluate the accuracy of laboratory instrumentation. The accuracy of laboratory analytical procedures is further evaluated through the analysis of method blanks that can assess potential contamination introduced during sample preparation and/or analysis.

The QC requirements, acceptance criteria, and potential corrective actions for laboratory QC checks that measure accuracy and field and trip blank QC are described on Form M. If data validation and assessment indicates that field and/or laboratory QC checks for accuracy do not meet measurement performance criteria, the potential impact on the project will be evaluated in the data quality assessment included in the applicable project reports. Limitations and potential corrective actions for the affected data will be established in this data quality assessment. If poor accuracy is indicated by analytical QC checks, laboratory procedures may need to be reviewed.

Representativeness

Sample representativeness will be assessed through the measures of precision and accuracy. Field documentation, field duplicate analyses, and laboratory QC sample results will provide indices for the evaluation of data representativeness. Field duplicates will be used to assess heterogeneity within a sampling medium.

The representativeness of sample results will be based on the evaluation of precision and accuracy. The data quality assessment included in the applicable project reports will address any issues concerning representativeness that develop upon data review and validation. This data quality assessment will evaluate the potential impact on the project and establish limitations and potential corrective actions for the affected data.

Sensitivity and Quantitation limits

Sensitivity is the ability of the method or instrument to detect the constituents of concern and other target analytes at the project specified quantitation limits (QLs). For this project, the minimum QLs will be based on the laboratory Practical Quantitation Limit (PQL). PQLs represent the minimum concentration that can be routinely identified and quantitated above the method detection limit (MDL) by the laboratory. If problems regarding sensitivity and quantitation limits arise during data review and validation, the potential impact on the project will be evaluated in the data quality assessment included in the applicable project reports. This data quality assessment will establish limitations and potential corrective actions for the affected data.

Comparability

Comparability between data sets will be made qualitatively to indicate the extent to which comparisons among different measurements of the same quantity will yield valid conclusions. The quality assurance objective for comparability is to ensure the comparability of results from each sampling event performed. The assessment of data comparability will begin once multiple sampling events have been performed. The data quality assessment included in the applicable project reports will address any issues concerning data comparability that arise upon data review and validation. The potential impact on the project will be

evaluated in this data quality assessment and will establish limitations and potential corrective actions for the affected data.

Completeness

Completeness is a measure (percentage) of the amount of valid data obtained from a measurement system relative to the amount that would be expected to be obtained under correct, normal conditions. A data set for a specific medium will be considered complete if 85% of the data packages are validatable and fully meet the data quality objectives provided in this QAPP. If data validation and assessment indicates that measurement performance criteria for completeness has not been achieved, the potential impact on the project will be evaluated in the data quality assessment included in the applicable project reports. This data quality assessment will establish limitations and potential corrective actions for the affected data.

Data Limitations and Actions

Data will be assessed with regard to the data quality objectives, measurement performance criteria, PARCC parameters, and the QC requirements included in Form M. If data quality is determined to be compromised for any given sampling event, a data quality assessment will be included in the applicable project report. This assessment will be used to describe and document data limitations based on the qualitative and quantitative performance criteria. Based on how the data are to be used, data that do not meet all the criteria will be appropriately qualified and limited in its use.

During field activities, QA/QC samples designed to assess sampling techniques (duplicates) will be collected and shipped at the frequencies provided on Form M. If the need for corrective action is identified based on data validation and evaluation, actions will be outlined in the data quality assessment included in the applicable project reports. The data assessment process is to be an on-going process, implemented by the project team and the laboratory.

ATTACHMENT A: PROJECT SAMPLING SOPS

SOP-4

STANDARD OPERATING PROCEDURE FOR EQUIPMENT DECONTAMINATION

Woodard & Curran, Inc.

FIELD EQUIPMENT DECONTAMINATION PROCEDURE

Decontamination of field equipment is necessary to ensure the quality of samples by preventing cross-contamination. In addition, decontamination reduces health hazards and prevents the spread of contaminants off-site.

Equipment needed:

Large/heavy Equipment (i.e., Drill rigs, backhoes, augers, drill pipe, bits, casing, and screen):

- High-pressure pump with steam-spray unit.
- Stiff-bristle brushes.

Small/sampling Equipment (i.e., Split spoons, bailers, bowls, and pumps):

- Soap
- Polyethylene sheeting
- Stiff-bristle brushes.
- Wash bottles or manual pump sprayer.
- 10% methanol solution (optional)
- Distilled water
- Tap water

Procedure. The following steps will be followed when decontaminating large/heavy equipment:

1. The field crew or contractor will construct a decontamination area at a designated area on site of 6-mil polyethylene, large enough to capture decontamination fluids. Decontamination of equipment will be performed over the decontamination pad. Depending on site contaminants, equipment may be decontaminated at each drilling location. Decon water will be collected and drummed for proper disposal.
2. Equipment and tools will be cleaned between each location and prior to the initiation of any sampling.
3. Spray areas (rear of rig or backhoe) exposed to contaminated soils using steam or high-pressure sprayer. Be sure to spray down all surfaces, including the undercarriage.
4. Document that decontamination was performed in the appropriate logbook.

Procedure. The following steps will be followed when decontaminating sampling equipment including split-spoons, spatulas, and hand tools that directly contact samples.

1. Set up a decontamination line. The decontamination line should progress from "dirty" to "clean", with an area for drying decontaminated equipment. The decontamination line should be set up on polyethylene sheeting.
2. Wash the item thoroughly in a bucket of soapy water (tap water). Use a stiff-bristle brush to dislodge any clinging dirt. Disassemble any items that might trap contaminants internally before washing. Do not reassemble until decontamination is complete.
3. Rinse the item in a bucket containing clear tap water. Rinse water should be replaced as needed.
4. Document that decontamination was performed in the appropriate logbook.
5. Disposable items will be bagged for disposal as general refuse.
6. Decontamination water will be drummed for proper disposal.

QA/QC

The Project Field Task Manager or designated alternate will oversee decontamination procedures to ensure that they have been completed according to the procedures outlined above. Equipment blanks will be collected and analyzed throughout the program to determine the effectiveness of decontamination procedures. Blank number and frequencies are presented in the QAPP.

References

None.

SOP-6

Revised November 2007

STANDARD OPERATING PROCEDURE FOR TEST PIT SAMPLING

Woodard & Curran, Inc.

Test Pit Sampling Procedure

Test Pits will be excavated with backhoe equipment to provide detailed visual examination of near surface soil, groundwater, and bedrock conditions. Test Pit soil samples may be collected using stainless steel and/or Teflon-lined scoops, trowels, shovels, spoons, or spatulas.

Equipment needed:

- Bound field logbook.
- Sample tags.
- Appropriate sample containers and labels.
- Insulated cooler and ice.
- Decontamination equipment and supplies.
- Personal protective clothing and equipment as required by the site-specific Health and Safety Plan (HASP).
- Stainless steel or aluminum trays or bowls.
- Stainless steel shovels, trowels, spoons, or spatulas.
- Backhoe Equipment

Test Pit Sampling Procedure:

1. Contact DIG SAFELY.NEW YORK at (800) 962-7962 prior to any subsurface investigation. In addition, contact local utilities that may have underground services on or near the Site.
2. Follow the sampling pattern outlined in the QAPP.
3. Mark the location of potential test pits.
4. At the direction of the project staff on-site, the backhoe operator will excavate the test pit in increments.
5. Test pit excavations will cease if any of the following occurs:
    - Distinct changes in stratigraphy or materials
    - Odors
    - Groundwater or fluid phase contaminants
6. The requirements for collecting grab samples of soil are as follows:
    a. Use a clean stainless steel trowel or spoon to collect sufficient material to fill the sample containers.
    b. Fill the sample containers directly from the sampling device, removing stones, twigs, grass, etc., from the sample. Additional sample containers may be required to obtain enough material for a minimum of 30 percent solids.
    c. Immediately secure the caps on the sample container.

d. Label container with the appropriate information. NOTE: Container may be labeled prior to sample collection.
e. Record samples (e.g., sample ID, location, depth, method, etc.) in the bound field logbook.
f. Pack sample in cooler with ice. The only preservation required for soil samples is to cool them to 4 degrees Celsius. A small plastic temperature blank will be filled with water and placed in the cooler with the samples. The temperature of the samples will be determined at the laboratory by measuring the temperature of the temperature blank.
g. Use decontaminated sampling equipment at each sample location to minimize cross-contamination.
h. In the event that a duplicate sample is collected: fill duplicate jars for VOAs as described above. For other parameters, place sufficient sample quantity in a stainless steel bowl and mix. Split the mixed sample into duplicate sampling jars.
i. VOC containers will be preserved with methanol. Pre-measured vials containing the appropriate quantity of methanol will be provided by the laboratory.

Field Log Information:

At a minimum, field logs for test pit excavation will include the following documentation:

- Plan and profile sketches of the test pit showing materials encountered, the depth of material, and sample locations
- Sketch of the test pit and distance and direction from permanent, identifiable location marks as appropriate
- A description of the material removed from the excavation
- A record of samples collected
- The presence or absence of water in the test pit and the depth encountered
- Other readings, or measurements taken during excavation, including field screening reading

Unless otherwise specified and the site-specific HASP discusses appropriate procedures, no personnel will enter the test pit. In addition, all test pits will be backfilled on the day of excavation. In most cases, excavation materials will be stockpiled on polyethylene sheeting and then returned to the test pit as backfill. In the event that grossly contaminated soil is excavated, excavated soils will be placed in roll-offs pending characterization and proper disposal at an appropriate off-site facility. The excavation will then be backfilled with uncontaminated soil pursuant to 6 NYCRR 375-6.7(d), free of extraneous debris or solid waste The backfill will be certified clean or sampled at a frequency of one sample per 50 cubic yards.

QA/QC

QA/QC procedures are outlined in the sampling procedures discussed above. Duplicates, blanks, and spikes have been incorporated into the QAPP to assess potential for sampling, shipping, and laboratory impacts on data quality. Percent solids will also be analyzed for each sediment sample so that proper concentration adjustments can be made.

References

"Soil Covers and Backfill" - 6 NYCRR 375-6.7(d).

SOP-9

Revised November 2007

STANDARD OPERATING PROCEDURE FOR AIR MONITORING

Woodard & Curran, Inc.

AIR MONITORING PROCEDURES - BREATHING ZONE

Air monitoring will be performed during invasive field activities to obtain qualitative volatile organic compound (VOC) and particulate concentrations in order to protect site workers and the community. Air monitoring will be completed upwind, near the activity in the worker's breathing zone, and downwind during sampling and intrusive activities. ***If a detection of total VOCs or particulate above the action levels indicated below is observed, stop work and immediately notify the Project Field Task Manager prior to implementing actions***. Refer to the site-specific HASP for additional health and safety procedures. All monitoring records (readings) and instrument calibration sheets must be available for NYSDEC or NYSDOH personnel to review.

Equipment Needed:

- Two Photoionization Detectors (PIDs) equipped with 10.0 or greater eV lamps, one hand-held and one monitoring station, capable of calculating 15-minute running average concentrations
- Two particulate monitoring stations capable of measuring particulate matter less than 10 micrometers in size (PM-10) integrated over a period of 15 minutes (or less) and equipped with audible alarm
- Calibration Sheets
- Field Log Book
- Personal Protective Equipment as outlined in the HASP

Air Monitoring Steps - PID measurements:

1. Calibrate the PIDs using procedures outlined in the instrument operations manual. The instrument should be calibrated at the beginning of each day of use and a check calibration at the finish of each field day. Consult the instrument operations manual for troubleshooting suggestions.
2. Set-up a monitoring station at the downwind perimeter of the work area or exclusion zone.
3. Using the hand-held instrument, measure upwind/background VOC concentrations at the start of each day and every 4-hours thereafter.
4. Also using the hand-held instrument, approximately every hour near the planned activities, measure VOC concentrations in the breathing zone, approximately 2-5 feet above the ground surface.

If the ambient air concentration of total VOCs at the downwind perimeter of the exclusion zone exceeds 5 parts per million (ppm) above background for the 15-minute average, work activities must be temporarily halted and monitoring continued. If the total VOC level readily decreases (per instantaneous readings) below 5 ppm over background, work activities can resume with continued monitoring.

If total VOC levels at the downwind perimeter of the work area or exclusion zone persist at levels in excess of 5 ppm over background but less than 25 ppm, work activities must be halted, the source of vapors identified, corrective actions taken to abate emissions, and monitoring continued. After these steps, work activities can resume provided that the total VOC level in the

worker's breathing zone is in compliance with the action level in the site-specific H&SP, and 200 feet downwind of the exclusion zone or half the distance to the nearest potential receptor or residential/commercial structure, whichever is less - but in no case less than 20 feet, is below 5 ppm over background for the 15-minute average.

If the VOC level is above the action level for worker safety in the site-specific H&SP, or above 25 ppm at the perimeter of the work area, activities must be shutdown.

Particulate Monitoring Steps:

1. Calibrate the meter using procedures outlined in the instrument operations manual. The instrument should be calibrated at the beginning of each day of use and a check calibration at the finish of each field day. Consult the instrument operations manual for troubleshooting suggestions.
2. Set-up monitoring stations at the upwind/background and downwind perimeter of the exclusion zone.
3. Throughout the day, visually monitor fugitive dust migration.

If the downwind PM-10 particulate level is 100 micrograms per cubic meter (mcg/m3) greater than background (upwind perimeter) for the 15-minute period or if airborne dust is observed leaving the work area, then dust suppression techniques must be employed (for example, wetting selected areas). Work may continue with dust suppression techniques provided that downwind PM-10 particulate levels do not exceed 150 mcg/m3 above the upwind level and provided that no visible dust is migrating from the work area.

If, after implementation of dust suppression techniques, downwind PM-10 particulate levels are greater than 150 mcg/m3 above the upwind level, work must be stopped and a re-evaluation of activities initiated. Work can resume provided that dust suppression measures and other controls are successful in reducing the downwind PM-10 particulate concentration to within 150 mcg/m3 of the upwind level and in preventing visible dust migration.

QA/QC

See above.

References

NYSDOH Generic Community Air Monitoring Plan – Appendix D to the NYSDEC Voluntary Cleanup Program Guide, Draft May 22, 2002.

ATTACHMENT B: ANALYTICAL LABORATORY SOPS

ACCUTEST LABORATORIES
Standard Operating Procedure

Lab Manager_____

QA Manager_____

Effective Date:_____

TEST NAME: METHOD 8270C, SEMIVOLATILE ORGANIC COMPOUNDS BY GAS CHROMATOGRAPHY/MASS SPECTROMETRY (GC/MS)

REFERENCE: SW846 8270C (Revision 3, December 1996)

Revised Sections: ***Table 9***

1.0 SCOPE AND APPLICATION

1.1 The following method describes the analytical procedure that is utilized by Accutest to analyze semivolatile organic compounds in extracts prepared from all types of solid waste matrices, soils, and water samples. Options are incorporated for the analysis of sixteen (16) polyaromatic hydrocarbons (PAH) and other compounds listed in table 8A by selected ion monitoring GC/MS (GC/MS-SIM).

1.2 Table 1 lists the neutral, acidic, and basic organic compounds that can be determined by this method. The applicable concentration range of this method is compound and instrument dependent. Some compounds may require special treatment due to the limitations caused by sample preparation and/or chromatographic problems.

2.0 SUMMARY OF METHOD

2.1 This method is performed in accordance with the following extraction methodologies in SW846, 3rd Edition: 3510, 3520, 3540, 3550 and 3580.

2.2 The resultant methylene chloride extract is injected into a tuned and calibrated GC/MS system equipped with a fused silica capillary column. The GC column is temperature-programmed to separate the analytes, which are then detected with a mass spectrometer (MS) connected to the gas chromatograph.

2.3 The peaks detected are qualitated by comparison to characteristic ions and retention times specific to the known target list of compounds.

2.4 Once identified, the compound is quantitated by internal standard techniques with an average response factor generated from the calibration curve.

2.5 Additional unknown peaks with a response greater than 10 % of the closest internal standard may be processed through a library search with comparison to a NIST98 database. An estimated concentration is quantitated by assuming a response factor of 1.

2.6 This method includes analytical options for PAHs and other selected compounds by GC/MS-SIM. The extract is fortified with an additional SIM specific internal standard mix and analyzed using selected ions that are characteristic of the compounds of interest following the analysis of lower concentration calibration standards analyzed under the same MS scan conditions. Qualitative and quantitative identification is conducted using the procedures employed for full scan analysis.

3.0 REPORTING LIMIT & METHOD DETECTION LIMIT

3.1 Reporting Limit. The reporting limit for this method is established at either method detection limit or the lowest concentration standard in the calibration curve, depending on the requirements of different regulatory programs. Detected concentrations below this concentration cannot be reported without qualification. See table 9.

3.1.1 Compounds detected at concentrations between the reporting limit and MDL are quantitated and qualified as “J”, estimated value. Program or project specifications may dictate that “J” qualified compounds are not to be reported.

3.2 Method Detection Limit. Experimentally determine MDLs using the procedure specified in 40 CFR, Part 136, Appendix B. This value represents the lowest reportable concentration of an individual compound that meets the method qualitative identification criteria.

3.2.1 Experimental MDLs must be determined annually for this method.

3.2.2 Process all raw data for the replicate analysis in each MDL study. Forward the processed data to the QA group for archiving.

4.0 DEFINITIONS

BATCH - a group of samples which behave similarly with respect to the sampling or the testing procedures being employed and which are processed as a unit. For QC purposes, if the number of samples in a group is greater than 20, then each group of 20 samples or less will all be handled as a separate batch.

BLANK - an analytical sample designed to assess specific sources of laboratory contamination.

CONTINUING CALIBRATION - a mid-range calibration check standard run every 12 hours to verify the initial calibration of the system.

EXTRACTED ION CURRENT PROFILE (EICP) - a plot of ion abundance versus time (or scan number) for ion(s) of specified mass (Es).

INITIAL CALIBRATION - analysis of analytical standards for a series of different specified concentrations which cover the working range of the instrument; used to define the linearity and dynamic range of the response of the mass spectrometer to the target compounds.

INTERNAL STANDARDS - compounds added to every standard, blank, matrix spike, matrix spike duplicate, and sample extract at a known concentration, prior to analysis. Internal standards are used as the basis for quantitation of the target compounds and must be analytes that are not sample components.

MATRIX - the predominant material of which the sample to be analyzed is composed.

MATRIX SPIKE - aliquot of a matrix (water or soil) fortified (spiked) with known quantities of specific compounds and subjected to the entire analytical procedure in order to indicate the appropriateness of the method for the matrix by measuring recovery.

MATRIX SPIKE DUPLICATE - a second aliquot of the same matrix as the matrix spike (above) that is spiked in order to determine the precision of the method.

METHOD BLANK - an analytical control consisting of all reagents, internal standards and surrogate standards, is carried throughout the entire preparatory and analytical procedure. The method blank is used to define the level of laboratory, background and reagent contamination.

METHOD DETECTION LIMITS (MDLs) - The minimum concentration of a substance that can be measured and reported with 99% confidence that the analyte concentration is greater than zero and is determined from analysis of a sample in a given matrix containing the analyte. MDLs should be determined approximately once per year for frequently analyzed parameters.

PERCENT DIFFERENCE (%D) - As used to compare two values, the percent difference indicates both the direction and the magnitude of the comparison, i.e., the percent difference may be either negative, positive, or zero. (In contrast, see relative percent difference.)

PRIMARY QUANTITATION ION - a contract specified ion used to quantitate a target analyte.

REAGENT WATER - water in which no interferant is observed at or above the minimum detection limit of the parameters of interest.

RECONSTRUCTED ION CHROMATOGRAM (RIC) - a mass spectral graphical representation of the separation achieved by a gas chromatograph; a plot of total ion current versus retention time.

RELATIVE PERCENT DIFFERENCE (RPD) - As used to compare two values, the relative percent difference is based on the mean of the two values, and is reported as an absolute value, i.e., always expressed as a positive number or zero. (In contrast, see percent difference.)

RELATIVE RESPONSE FACTOR (RRF) - a measure of the relative mass spectral response of an analyte compared to its internal standard. Relative Response Factors are determined by analysis of standards and are used in the calculation of concentrations of analytes in samples.

RELATIVE RETENTION TIME (RRT) - the ratio of the retention time of a compound to that of a standard (such as an internal standard).

RESOLUTION - also termed separation or percent resolution, the separation between peaks on a chromatogram, calculated by dividing the depth of the valley between the peaks by the peak height of the smaller peak being resolved, multiplied by 100.

SECOND SOURCE CALIBRATION CHECK STANDARD - a standard from a separate source than the calibration curve that is used to verify the accuracy of the calibration standards. An external check must be run whenever an initial calibration is performed.

SURROGATES - pure analytes added to every blank, sample, matrix spike, matrix spike duplicate, and standard in known amounts before extraction or other processing; used to evaluate analytical efficiency by measuring recovery. Surrogates are brominated, fluorinated, or isotopically labeled compounds not expected to be detected in environmental media.

5.0 HEALTH & SAFETY

5.1 The analyst must follow normal safety procedures as outlined in the Accutest Health and Safety Plan and Personal Protection Policy, which include the use of safety glasses and lab coats. In addition, all acids are corrosive and should be handled with care. Flush spills with plenty of water. If acids contact any part of the body, flush with water and contact the supervisor.

5.2 The toxicity or carcinogenicity of each reagent used in this method has not been precisely determined; however, each chemical should be treated as a potential health hazard. Exposure to these reagents should be reduced to the lowest possible level. The laboratory is responsible for maintaining a current awareness file of OSHA regulations regarding the safe handling of the chemicals specified in this method. A reference file of data handling sheets is made available to all personnel involved in these analyses.

5.3 The following analytes covered by this method have been tentatively classified as known or suspected human or mammalian carcinogens: benzo(a)anthracene, benzidine, 3,3'-dichlorobenzidine, benzo(a)pyrene, dibenzo(a,h)anthracene, N-nitrosodimethylamine, and 4,4'-DDT. Prepare primary standards of these toxic compounds in a hood. A NIOSH/Mass approved toxic gas respirator must be worn when the analyst handles high concentrations of these toxic compounds.

6.0 INTERFERENCES

6.1 The data from all blanks, samples, and spikes must be evaluated for interferences.

6.2 Method interferences may be caused by contaminants in solvents, reagents, glassware, and other stages of sample processing. Refer to "The Preparation of Glassware for Extraction of organic contaminants" SOP for practices utilized in the extraction department.

6.3 Matrix interferences may be caused by contaminants that are co-extracted from the sample. The extent of matrix interferences will vary considerably from source to source, depending upon the nature and diversity of the industrial complex or municipality being sampled.

6.4 To reduce carryover when high-concentration samples are sequentially analyzed, the syringe must be rinsed out between samples with solvent. Whenever an unusually concentrated sample is encountered, it should be followed by the analysis of solvent to check for cross contamination.

7.0 SAMPLE COLLECTION, PRESERVATION, & HOLDING TIMES

7.1 Water samples may be collected in 1-liter glass bottles with Teflon insert in caps. Soil samples may be collected in 250-ml widemouth amber glass bottles.

7.1.1 Sample should be taken with care so as to prevent any portion of the collected sample coming in contact with the sampler's gloves, thus avoiding possible phthalate contamination.

7.2 Test all aqueous samples for residual chlorine using test paper for free and total chlorine. If the sample tests positive for residual chlorine, add 80 mg of sodium thiosulfate to each liter of sample.

7.3 The samples must be protected from light and refrigerated at 4° C from the time of receipt until extraction and analysis.

7.4 Store the sample extracts at -10 °C in amber vials (protected from light), in sealed vials equipped with unpierced PTFE-lined septa.

7.5 HOLDING TIME

7.5.1 Aqueous samples must be extracted within 7 days of sampling.

7.5.2 Soil, sediments and concentrated waste samples must be extracted within 14 days of sampling.

7.5.3 Extracts must be analyzed within 40 days following extraction.

8.0 APPARATUS & MATERIALS

8.1 GAS CHROMATOGRAPH/MASS SPECTROMETER SYSTEM

8.1.1 Gas Chromatograph. HP-5890, HP-6890, or Agilent 6890-N which includes an analytical system that is complete with a temperature programmable gas chromatograph and all required accessories including syringes, capillary chromatographic columns, and gases.

8.1.1.1 The injection port is designed for splitless injection with capillary columns.

8.1.1.2 The capillary column is directly coupled to the source.

8.1.2 Column.

8.1.2.1 30 m x 0.25 mm fused silica (0.25 μm film thickness) DB-5MS or equivalent capillary column. Condition the column as per manufacture's directions.

8.1.3 Mass Spectrometer (HP-5972, HP-5973 or Agilent 5975).

8.1.3.1 Full Scan Mode -Capable of scanning from 35-500 amu every 1 second or less utilizing 70 volt (nominal) electron energy in the electron impact ionization mode.

8.1.3.2 SIM Mode- Capable of selective ion grouping at specified retention times for increased compound sensitivity (table 2a).

8.1.3.3 Capable of producing a mass spectrum which meets all the EPA performance criteria in Table 3 when injecting 50 ng of Decafluorotriphenyl phosphine (DFTPP).

8.2 DATA SYSTEM

8.2.1 Acquisition and Instrument Control: HP Chemstation. A computer system is interfaced to the mass spectrometer that allows the continuous acquisition and storage on machine readable media (disc) of all mass spectra obtained throughout the duration of the chromatographic program.

8.2.2 Data Processing: HP Enviroquant. The software accommodates searching of GC/MS data files for analytes which display specific fragmentation patterns. The software also allows integrating the abundance of an EICP between specified time or scan number limits. The data system includes the NIST98 spectra library for qualitative searches of non-target compounds

present in the chromatogram. It flags all data files that have been edited manually by laboratory personnel.

8.2.3 Offline Magnetic Tape Storage Device (Lagato Networker) - the magnetic tape storage device copies data for long term, offline storage.

8.3 SYRINGE

8.3.1 10 µl graduated, auto sampler (Hamilton or equiv.).

9.0 REAGENTS AND STANDARDS

9.1 Solvents - Ultra pure, chromatography grade methylene chloride and acetone.

9.2 Stock Standard Solutions.

9.2.1 Certified, commercially prepared standards, from two separate sources are used.

9.2.1.1 Base Neutrals.

- Base/Neutrals Mix #1 (Absolute: Semivolatile Organics Standard Mix # 1).
- Base/Neutrals Mix #2 (Absolute: Semivolatile Organics Standard Mix # 2).
- PAH Mix (Absolute: Semivolatile Organics Standard Mix # 7).
- PAH Mixture #2 (Ultra).
- PAH Selected Ion Monitoring Mixture
- Benzidines Mix (Absolute: Semivolatile Organics Standard Mix # 6).
- Toxic Substances #2 (Absolute: Semivolatile Organics Standard Mix # 5).
- Pyridines Mixture (Ultra).
- Additonal requested compound(s) mix (Absolute).
- Base Neutral Mixture (2nd Source).

Acids.

- Phenols Mix (Absolute: Semivolatile Organics Standard Mix # 8).
- Toxic Substances #1(Absolute: Semivolatile Organics Standard Mix # 4).
- Acid Mixture (2nd Source).

9.2.2 Internal Standard Mixtures.

9.2.2.1 Ultra (or equivalent) at a concentration of 4,000 µg/ml for each of the following compounds.

Full Scan

- 1,4-Dichlorobenzene-d4
- Naphthalene-d8
- Acenaphthene-d10
- Phenanthrene-d10
- Chrysene-d12
- Perylene-d12

SIM

- 1,2-Dichlorobenzene-d4
- 1-Methylnaphthalene-d10
- Fluorene-d10
- Fluoranthene-d10
- Benzo(a)pyrene-d12

9.2.2.2 The internal standards should permit most of the components of interest in a chromatogram to have retention times of 0.8 - 1.20 relative to one of the internal standards.

9.2.2.3 Each 1 ml sample extract, and standard undergoing analysis should be spiked with 10 µl of the internal standard mixtures, resulting in a concentration of 40 µg/ml of each internal standard for full scan analysis and 4 ug/ml for SIM analysis.

9.2.3 Surrogate Standard Mixture.

9.2.3.1 B/N Surrogate Standard Mix: RESTEK (or equivalent) at a concentration of 5,000 µg/ml each surrogate compound.

- Nitrobenzene-d5.
- 2-Fluorobiphenyl.
- p-Terphenyl-d14.

9.2.3.2 Acid Surrogate Standard Mix: RESTEK (or equivalent) at a concentration of 7,500 µg/ml each surrogate compound.

- Phenol-d5.
- 2-Fluorophenol.
- 2,4,6-Tribromophenol.

9.2.4 DFTPP Tune Stock.

9.2.4.1 Protocol (or equivalent) at a concentration of 2,500 µg/ml for the following compounds.

- Decafluorotriphenylphosphine.
- 4,4'-DDT.
- Benzidine.
- Pentachlorophenol.

9.2.5 Store at -10 ^{o}C or less when not in use or according to the manufacturer's documented holding time and storage temperature recommendations. Stock standard solutions must be replaced after 1 year or sooner if manufacture's expiration date comes first or comparison with quality control check samples indicates degradation.

9.3 Surrogate Spiking Solutions.

9.3.1 Two surrogate spiking solutions, base/neutral surrogate solution and acid surrogate solution, at a concentration of 100 µg/ml are prepared in Extraction. Spike each sample, and blank with 0.5 ml of each solution, prior to extraction, for a final concentration of 50 µg/l of each surrogate compound in the extract.

9.3.2 A calibration range must be constructed for the surrogate compounds. Accordingly, appropriate amounts of surrogates are mixed with each calibration solution to define a range similar to the target compounds.

9.3.3 Store at -10 °C or less or according to the manufacturer's documented storage temperature recommendations. Prepare fresh surrogate spiking solutions every year, or sooner, if the manufacturer's expiration dates come first or if the solution has degraded or evaporated.

9.4 Intermediate Calibration Standard Solution.

9.4.1 The calibration stock solution is prepared by adding an appropriate amount of each stock and surrogate compounds into a 10 ml volumetric flask. Dilute the solution to the volume with methylene chloride and mix thoroughly. Refer to Table 7A for details.

9.5 Calibration Standards.

9.5.1 Initial Calibration Standards.

9.5.1.1 Calibration standards containing the surrogate compounds should be made by quantitative dilutions of the above intermediate solution. The calibration standards are prepared at a minimum of five concentrations to cover the range of 2 - 100 µg/ml for full scan and 0.2 – 15ug/ml for SIM, depending upon project specific requirements. Suggested levels and preparations are shown in Table 7B.

9.5.2 Continuing Calibration Verification.

9.5.2.1 The concentration of the mid range standard used for continuing calibration verification is alternated between 25 and 50 µg/ml for full scan and 2.5 and 5.0 for SIM.

9.5.3 Store the calibration standards in a refrigerator at 4 °C and prepare every 6 months or before the manufacturer's expiration date, whichever is sooner. Standards must be replaced immediately if the analysis of check standards indicates degradation.

9.6 Second Source Calibration Check Standard.

9.6.1 Second source calibration check standard is prepared per Table 7C, using the intermediate solutions prepared in Extraction.

9.6.2 A second source calibration check standard is analyzed after each initial calibration.

9.7 Daily GC/MS Performance Checks.

9.7.1 The solution is prepared at 50 μg/ml by making a 1:50 dilution of DFTPP stock solution (Section 9.2.4) in methylene chloride.

9.8 Matrix Spike Solutions.

9.9.1 The matrix spike solutions for both Base/Neutral and Acid are prepared in Acetone at a concentration of 100 μg/ml for each compound. Prepare the matrix spike, matrix spike duplicate and blank spike by spiking the selected sample and the blank with 0.5 ml of these solutions for a final concentration of 50 μg/l of each compound.

9.10 All organic new standard solutions are analyzed prior to use to verify the accuracy of the prepared concentration.

9.10.1 The prepared standard solution is analyzed using the determinative (instrumental) technique for the method.

9.10.2 The solution is analyzed following the completion of instrument calibration or a calibration check.

9.10.3 The concentration of the standard solution is determined using the software routines used in determining the acceptability of calibration verification.

9.10.4 The data is evaluated and the percent difference determined. The standard solution is approved for use if all designated compounds are present in the solution and the percent difference is less than the established criteria (±20%).

10.0 CALIBRATION

10.1 Initial Calibration.

10.1.1 The calibration range covered for routine analysis under RCRA employs standards of 2, 5, 10, , 25, 50, 80, 100 μg/ml for full scan and 0.2, 1, 2.5, 5, 10, and 15 ug/ml for SIM. A minimum of five standards must be run sequentially. The reporting limit is established by the concentration of the lowest standard analyzed during the initial calibration. Lower concentration standard may be needed to meet the reporting limit requirements of state specific regulatory program. The linear range covered by this calibration is the highest concentration standard.

10.1.2 A calibration range must be constructed for each surrogate compound. Accordingly, add appropriate amounts of surrogate spiking solutions to the calibration solution to define a range similar to the target compounds.

10.1.3 Aliquot 1 ml of each calibration standard into a 2 ml crimp top vial.

10.1.4 Prior to analysis, add 10 μl of the applicable (Full acan and/or SIM) internal standard solution (Section 9.2.2) to each standard. This results in a concentration of 40 μg/ml (Full scan) and 4ug/ml (SIM) for each internal standard.

10.1.5 Analyze the standard solutions using the conditions established in Section 11.0. Each analyte is quantitatively determined by internal standard technique using the closest eluting internal standard and the corresponding area of the major ion. See Table 6.

10.1.6 The Response Factor (RF) is defined in Section 13.1. Calculate the mean RF for each target analyte, using minimum of five RF values calculated from the initial calibration curve.

10.1.7 For the initial calibration to be valid, the following criteria must be met.

10.1.7.1 The System Performance Check Compounds (SPCCs) (Table 5) must be checked for a minimum average response factor. The minimum mean response factor for these compounds is 0.05. If the initial calibration criteria for SPCCs are not achieved, perform corrective action before completing the calibration.

10.1.7.2 The % RSD for each individual Calibration Check Compound (CCC) (Table 5) must be less than 30 %. This check is used to identify gross instrument operating problems. If the initial calibration criteria for CCCs are not achieved, perform corrective action before completing the calibration.

10.1.7.3 The percent relative standard deviation (% RSD) (see Section 13.2) of all target analytes must be less than 15 %.

10.1.7.4 If the %RSD of any individual (non CCC) compound is >15%, employ an alternative calibration linearity model. Specifically, linear regression using a least squares approach may be employed.

10.1.7.4.1 If a linear regression is employed, select the linear regression calibration option of the mass spectrometer data system. Do not force the regression line through the origin and do not employ 0,0 as a sixth calibration standard.

10.1.7.4.2 The correlation coefficient (r value) must be ≥0.99 for each compound to be acceptable.

10.1.7.4.3 Perform corrective action and recalibrate if the calibration criteria cannot be achieved.

10.1.7.5 The initial calibration criteria for this method applies to all additional compounds of concern specified by the client.

10.1.7.6 The relative retention times of each target analyte in each calibration standard should agree within 0.06 relative retention time units.

10.2 Second Source Calibration Check Standard.

10.2.1 The calibration is verified with a calibration check standard at 50 µg/ml (Full scan) or 5ug/ml (SIM) from an external source (Section 9.6). It must be analyzed immediately following the initial calibration.

10.2.2 The percent difference (% D) (Section 13.3) for this standard must meet the criteria of 20% for all the target compounds.

10.2.2.1 If % D is greater than 20%, reanalyze the second source check. If the criteria cannot be met upon re-injection, re-prepare the second source solution using a fresh ampoule and repeat the process.

10.2.2.2 If the %D criteria cannot be achieved after re-preparation of the second source, prepare a third source and repeat the process. Make fresh calibration standards using one of the two standard sources that match each other.

10.3 Continuing Calibration Verification Standard.

10.3.1 A calibration verification standard at close mid-level concentration of the initial calibration range at alternating 25 and 50ug/ml for full scan and 2.5ug/ml and 5ug/ml for SIM must be acquired every 12 hrs.

10.3.1.1 Vary the concentration of calibration verification standard on alternate verifications (i.e. every other calibration verification) using an alternative concentration standard. The standard selected must be lower than the midpoint calibration standard.

10.3.2 For the continuing calibration to be valid, all of the following specified criteria must be met.

10.3.2.1 The minimum RF for SPCC compounds must be 0.05. Each SPCC compound in the calibration verification standard must meet its minimum response factor. The percent difference (% D) for CCC compounds must be less than 20%.

10.3.2.1.1 If the CCCs are not part of the target list, then all targeted analytes must meet the 20% D criteria. All non-CCC compounds should also meet the 20% D criteria.

10.3.3 If the first continuing calibration verification does not meet criteria, a second standard may be injected after notify the team leader/manager and checking the system for defects.

10.3.3.1 A continuing calibration check is allowed to be repeated only once; if the second trial fails, a new initial calibration must be performed. In situations where the first check fails to meet the criteria, the instrument logbook should have clear documented notations as to what the problem was and what corrective action was implemented to enable the second check to pass.

10.3.4 If the verification criteria cannot be achieved, a new initial calibration must be performed.

10.3.5 If any of the internal standard areas change by a factor of two (- 50% to + 100%) or the retention time changes by more than 30 seconds from the midpoint standard of the last initial calibration, the mass spectrometer must be inspected for malfunctions and corrections must be made, as appropriate.

10.3.5.1 Reanalyze the continuing calibration standard. New initial calibration is required if reanalyzed standard continues to fail the internal standard requirements.

10.3.5.2 All samples analyzed while the system was out of control must be reanalyzed following corrective action.

11.0 PROCEDURE

11.1 Instrument Conditions.

11.1.1 Recommended instrument conditions are listed in Table 2 and 2a (SIM only). Modifications of parameters specified with an asterisk are allowed as long as criteria of calibration are met. Any modification should be approved by team leader/manger.

11.2 Daily GC/MS Performance Checks.

11.2.1 Mass Spectrometer Tuning. Every 12-hour, inject 1 µl of 50 ng/µl or 2 µl of 25 ng/µl DFTPP solution directly on to the column.

11.2.2 The GC/MS system must be checked to verify that acceptable performance criteria are achieved (see Table 3).

11.2.3 This performance test must be passed before any sample extracts, blanks or standards are analyzed. Evaluate the tune spectrum using three mass scans from the chromatographic peak and a subtraction of instrument background.

11.2.3.1 Select the scans at the peak apex and one to each side of the apex.

11.2.3.2 Calculate an average of the mass abundances from the three scans.

11.2.3.3 Background subtraction is required. Select a single scan in the chromatogram that is absent of any interfering compound peak and no more than 20 scans prior to the elution of DFTPP. The background subtraction should be designed only to eliminate column bleed or instrument background ions. Do not subtract part of the tuning compound peak.

11.2.4 If all the criteria are not achieved, the analyst must retune the mass spectrometer with team leader/manager and repeat the test until all criteria are met.

11.2.4.1 Alternatively, an additional scan on each side of the peak apex may be selected and included in the averaging of the mass scans. This will provide a mass spectrum of five averaged scans centered on the peak apex. NOTE: The selection of additional mass scans for tuning may only be performed with supervisory approval on a case by case basis.

11.2.5 The injection time of the acceptable tune analysis is considered the start of the 12-hour clock.

11.2.6 In order to assess GC column performance and injection port inertness, the DFTPP tune standard also contains appropriate amount of 4,4'-DDT, benzidine and pentachlorophenol.

11.2.6.1 Injection Port Inertness Check.

11.2.6.1.1 The injection port inertness of the GC portion of the GC/MS is evaluated by the percent breakdown of 4,4'-DDT. DDT is easily degraded in the injection port. Breakdown occurs when the injection port liner is contaminated by high boiling residue from sample injection or when the injector contains metal fittings. Check for degradation problems by injecting a GC/MS tune standard

containing 4,4'-DDT every 12 hour, regardless of whether DDT is a target analyte. The degradation of DDT to DDE and DDD should not exceed 20%, in order to proceed with calibration procedures. Refer to Section 13.7 for calculation.

11.2.6.2 Column Performance Check.

11.2.6.2.1 The condition of the GC column is evaluated by the tailing of benzidine and pentachlorophenol every 12 hour. Benzidine and pentachlorophenol should be present at their normal responses, with no visible peak tailing, as demonstrated by the peak tailing factors. The tailing factor criteria for benzidine (base-neutral fraction) must be < 3 and for pentachlorophenol (acid fraction) must be < 5.

11.2.6.3 If degradation is excessive and/or poor chromatography is observed, the injector port may require cleaning. It may also be necessary to break off the first 6-12 in. of the capillary column.

11.3 Initial Calibration

11.3.1 Refer to Section 10.1.

11.4 Second Source Calibration Check

11.4.1 This standard must at least be analyzed when initial calibration provided. Refer to Section 10.2.

11.5 Continuing Calibration Checks

11.5.1 Refer to Section 10.3.

11.6 Sample Analysis.

11.6.1 Allow the sample extract to warm to room temperature. Spike 10 µl of the appropriate internal standard mix (4,000 µg/ml for full scan and 400ug/ml for SIM) into 1 ml sample extract, just prior to analysis. This is equivalent to a concentration of 40 µg/ml (full scan) and 4ug/ml (SIM) of each internal standard.

11.6.2 Inject 1 µl aliquot of the sample extract into the GC/MS system. A splitless injection technology is used.

11.6.3 If the response for any ion of interest exceeds the working range of the GC/MS system, dilute the extract and reanalyze.

11.6.4 When the extracts are not being used for the analyses, store them at -10°C, protected from light, in sealed vials equipped with unpierced PTFE-lined septa.

11.7 Sample Dilution

11.7.1 Establish dilution of sample in order to fall within calibration range or to minimize the matrix interference.

- Utilize screen data (specific project only).
- Utilize acquired sample data.
- Utilize the history program or approval from client/project.
- Sample characteristics (appearance, odor).

11.7.2 If no lower dilution has been reported, the dilution factor chosen should keep the response of the largest peak for a target analyte in the upper half of the initial calibration range of the instrument.

11.7.3 Preparing Dilutions.

11.7.3.1 Prepare sample dilutions quantitatively. Dilute the sample extract with methylene chloride using logical volume to volume ratios, i.e., 1:5, 1:10, 1:50, etc. Large dilutions may require serial dilutions or the use of a Class A 10 ml volumetric flask.

11.7.3.2 Syringe dilutions. – Calibrated syringes are used to prepare dilutions. Add the appropriate amount of methylene chloride to a clean autosampler vial. Add the proper amount of sample using a calibrated syringe of the appropriate volume for the dilution. Add sufficient internal standard to maintain a concentration of 40ug/ml. Cap the vial and gently shake to disperse the sample through the solvent.

11.7.3.3 Volumetric Flask Dilutions – Large dilutions may require the use of a 10 ml Class A Volumetric flask.

11.8 Establishing Search Criteria. Search criteria for each compound listed in the method must be entered into the method quantitation/identification file in the Enviroquant software package. This activity must be performed before attempting qualitative and quantitative analysis on any acquired data file. The search criteria are based on compound retention time and the characteristic ions from the reference mass spectrum. Characteristic ions are defined as the three ions of greatest relative intensity, or any ions over 30% relative intensity, if less than three such ions occur in the reference spectrum. The number of secondary ions displayed for each compound search varies between compounds.

11.8.1 Select the primary ion for the target compound from the characteristic ions in Table 6. If multiple characteristic ions are listed, the first ion is the major (primary) ion. Enter this ion as the search ion. Enter the relative abundance of this ion (100% for base peak ions) and set the relative abundance window at ± 30%.

11.8.1.2 Alternate primary ions may be selected when interferences exist from ion abundance contribution from close eluting compounds.

11.8.2 Enter the remaining ions as secondary ions. Secondary ions are not be used to locate peaks within the search window, but are be used to support the qualitative identification of selected peaks. The number of secondary ions displayed for each compound search varies

between compounds depending on the number of ions in the spectra >30% relative abundance.

11.8.3 Set the relative abundance windows for the secondary ions at ± 30%.

11.8.4 Establish the relative retention window for each compound. Because it is a relative retention window the same width window applies to all compounds on the quantitation list. The window must be established at a minimum of 0.06 relative retention time units.

11.9 Data Interpretation.

11.9.1 Executing Qualitative Searches. The target compounds shall be identified by analyst with competent knowledge in the interpretation of mass spectra by comparison of the sample mass spectrum to the mass spectrum of a standard of the suspected compound.

11.9.1.1 The search procedure will identify peaks within the search window using the primary ion only. Secondary ions and the relative retention are used to determine "the best match". If the best match contains secondary ions outside the relative abundance window, they will be flagged with a # sign.

11.9.2 Qualitative Identification. The qualitative identification of compounds determined by this method is based on retention time and on comparison of the sample mass spectrum, after background correction, with characteristic ions in a reference mass spectrum. Compounds are identified when the following criteria are met.

11.9.2.1 The intensities of the characteristic ions of a compound must maximize in the same scan or within one scan of each other.

11.9.2.2 The sample component must elute at the same relative retention time (RRT) as the daily standard. Criterion is the RRT of sample component must be within ± 0.06 RRT units of the standard.

11.9.2.3 The relative intensities of the characteristic ions agree within 30% of the relative intensities of these ions in the reference spectrum. (Example: For an ion with an abundance of 50% in the reference spectrum, the corresponding abundance in a sample spectrum can range between 20% and 80%.)

11.9.2.3.1 If a chromatographic peak exhibits a spectrum containing an ion with relative abundance outside the relative abundance window is selected for reporting, the analyst must annotate the spectra that the compound qualified based on his/her best judgement. This circumstance will most often occur from coeluting compounds with similar ions or background matrix interferences.

11.9.3 Quantitative Analysis.

11.9.3.1 Once a target compound has been identified, its concentration (Section 13.4) will be based on the integrated area of the quantitation ion, normally the base peak (Table 6). The compound is quantitated by internal standard technique with an average response factor generated from the initial calibration curve.

11.9.3.2 If the sample produces interference for the primary ion, use a secondary ion to quantitate. This may be characterized by an excessive background signal of the same ion, which distorts the peak shape beyond a definitive integration. Also interference could severely inhibit the response of the internal standard ion. The secondary ion must be used to generate a new response factor.

11.10 Library Search for Tentatively Identified Compounds.

11.10.1 If a library search is requested, the analyst should perform a forward library search of the NIST98 mass spectral library to tentatively identify 10 to 15 non-reported compounds (15 for base, 10 for acid, 25 for base/acid fraction).

11.10.2 Guidelines for making tentative identification are listed below.

11.10.2.1 These compounds should have a response greater than 10% of the nearest internal standard. The response is obtained from the integration for peak area of the Total Ion Chromatogram (TIC).

11.10.2.2 The search is to include a spectral printout of the 3 best library matches for a particular substance. The results are to be interpreted by analyst.

11.10.2.3 Molecular ions present in the reference spectrum should be present in the sample spectrum.

11.10.2.4 Relative intensities of major ions in the reference spectrum (ions > 10 % of the most abundant ion) should be present in the sample spectrum.

11.10.2.5 The relative intensities of the major ions should agree within ± 20 %. (Example: For an ion with an abundance of 50% in the standard spectrum, the corresponding sample ion abundance must between 30 and 70%).

11.10.2.6 Ions present in the sample spectrum but not in the reference spectrum should be reviewed for possible background contamination or presence of coeluting compounds.

11.10.2.7 Ions present in the reference spectrum but not in the sample spectrum should be verified by performing further manual background subtraction to eliminate the interference created by coeluting peaks and/or matrix interference.

11.10.3 Quantitation of the tentatively identified compounds is obtained from the total ion chromatogram based on a response factor of 1 and is to be tabulated on the library search summary data sheet.

11.10.4 The resulting concentration should be reported indicating: (1) that the value is estimate, and (2) which internal standard was used to determine concentration. Quantitation is performed on the nearest internal standard.

11.11 Selected Ion Monitoring (SIM) Option

11.11.1 <u>Instrument Set-Up</u>: Modify the method for SIM analysis and define ion groups with retention times, ions and dwell times to include base peak ion for the target compounds of

interest, surrogates, and internal standards (Table 2a, Table 8a) Select a mass dwell time of 50 milliseconds for all compounds.

11.11.2 Calibration: Calibrate the mass spectrometer in the selected ion monitoring mode using 6 calibration standards of 0.2, 1.0, 2.5, 5.0, 10.0 and 15.0 ug/ml. Spike each standard with the SIM specific internal standard solution at 4ug/ml. Calculate individual response factors and response factor RSDs using the procedures and criteria described in Section 10.1.6, 10.1.7.3 and 10.1.7.4.

11.11.3 Initial Calibration Verification. Verify the initial calibration after its completion using a 5.0 ug/ml calibration standard purchased or prepared from a second standards reference materials source. The initial calibration verification must meet the criteria of Section 10.2.2.

11.11.4 Continuing Calibration Verification. Verify the initial calibration every 12 hours using a 5.0 ug/ml calibration. The continuing calibration verification must meet the criteria of Section 10.3.

11.11.5 Sample Extract Analysis: Each extract has been previously spike with the SIM internal standard at 4 ug/ml. Analyze the sample extracts for the compounds of interest using the SIM scan parameters employed for the calibration standards.

11.11.6 Surrogate Standard Calculation.. Report surrogate spike accuracy for the surrogates spiked for the full scan GC/MS analysis at 40 ug/ml.

12.0 QUALITY CONTROL

12.1 QC Requirements Summary.

Daily GC/MS Performance Checks	Beginning of the analytical shift and every 12 hours
Initial Calibration	Whenever needed.
Second Source Calibration Check	Following initial calibration
Continuing Calibration Verification	Every 12 hours.
Method Blank	One per extraction batch*.
Blank Spike	One per extraction batch*.
Matrix Spike	One per extraction batch*.
Matrix Spike Duplicate	One per extraction batch*.
Surrogate	Every sample extract and standard.
Internal Standard	Every sample extract and standard.

*The maximum number of samples per batch is twenty or per project specification.

12.2 Daily GC/MS Performance Checks.

12.2.1 Refer to Section 11.2.

12.3 Initial Calibration.

12.3.1 Refer to Section 10.1.

12.4 Second Source Calibration Check.

12.4.1 Refer to Section 10.2.

12.5 Continuing Calibration Verification.

12.5.1 Refer to section 10.3.

12.6 Method blank.

12.6.1 The method blank is either reagent water or anhydrous sodium sulfate (depending on the sample matrix) which must be extracted with each set of 20 or less samples. For a running batch, a new method blank is required for each different extraction day. The method blank is then extracted and carried through all stages of the sample preparation and measurement.

12.6.2 If the method blank contains a target analyte above its MDL (Appendix I), the entire batch must be re-extracted and re-analyzed.

12.6.3 Surrogate compounds are added to the method blank prior to extraction. If the surrogate accuracy in the method blank does not meet in house criteria (Appendix I), it must be reanalyzed. If the reanalysis confirms the original data, the entire batch should be re-extracted.

12.7 Blank Spike

12.7.1 A blank spike must be extracted with each set of 20 or less samples. For a running batch, a new blank spike is required for each different extraction day. The blank spike consists of an aliquot of a clean (control) matrix similar to the sample matrix and of the same volume. It is spiked with the same analytes at the same concentrations as the matrix spike/matrix spike duplicate.

12.7.1.1 An additional blank spike is prepared for sample batches that contain samples which are analyzed for Polynuclear aromatic hydrocarbons. The concentration of tye bl;ank spike is prepared at

12.7.2 The blank spike recoveries should be assessed using in house limits specified in Appendix I.

12.7.3 If a blank spike is out of control, the following corrective actions must be taken and all the associated samples must be re-extracted and reanalyzed. The exception is if the blank spike recovery is high and no hits reported in associated samples and QC batch. In that case, the sample results can be reported with footnote (remark) and no further action is required.

12.7.3.1 Check to be sure that there are no errors in the calculations, or spike solutions. If errors are found, recalculate the data accordingly.

12.7.3.2 Check instrument performance. If an instrument performance problem is identified, correct the problem and reanalyze the sample batch.

12.7.3.3 If no problem is found, re-extract and reanalyze the sample batch.

12.8 Matrix Spike(MS) / Matrix Spike Duplicate(MSD)

12.8.1 One sample is randomly selected from each extraction batch and spiked in duplicate to assess the performance of the method as applied to a particular matrix and to provide information on the homogeneity of the matrix. Both the MS and MSD are carried through the complete sample preparation, and determinative procedures.

12.8.2 Matrix spikes are prepared by spiking an actual sample at a concentration of 50 µg/l for both base/neutral and acids.

12.8.3 Assess the matrix spike recoveries (% R) (Section 13.5) and relative percent difference (RPD) (Section 13.6) against the control limits in Appendix I.

12.8.4 If the matrix spike accuracy of any individual compound is out of control, the accuracy for the compound in the blank spike must be within control. In such case, matrix interference is assumed and the data is reported with footnote (e.g., spike recovery indicates possible matrix interference). No further corrective action is required.

12.9 Surrogates

12.9.1 All standards, blanks, sample extracts, and matrix spikes contain surrogate compounds which are used to monitor the performance of the extraction and analytical system.

12.9.2 The recoveries (Section 13.5) of the surrogates must be evaluated to determine whether or not they fall within surrogate control limits (Appendix I) developed by the laboratory annually.

12.9.3 If the recovery of any surrogate compound does not meet the control limits, the calculation must be checked for possible error. The surrogate solution should be checked for degradation. Contamination and instrument performance should also be reviewed.

12.9.3.1 Reanalyze the extract if no calculation errors are detected. If the surrogate recoveries for the reanalyzed extract are in control, report the data from the reanalysis only.

12.9.3.2 If the data from the reanalysis is also out of control, re-extract and reanalyze the sample.

12.9.3.3 If, upon reanalysis, the surrogate recoveries are acceptable, report the reanalysis data. If the holding time has expired prior to the reanalysis, report both the original and reanalysis results and note the holding time problem.

12.9.3.4 If the recovery is again not within limits, the problem is considered to be matrix interference. Submit both data sets with the original analysis being reported.

12.9.4 If the sample exhibits matrix interference, defined as excessive signal where target or non-target responses are greater than the response of the internal standards. In this case, reanalysis may not be required following team leader/manager approval; the surrogates will be qualified as outside the limits due to matrix interference. Alternatively, sample may be reanalyzed on dilution, if the reanalysis is again not within the limit, the sample should be reported with a footnote indicating that there were possible matrix interference.

12.10 Internal Standards.

12.10.1 Retention time for all internal standards must be within ± 30 seconds of the corresponding internal standard in the latest continuing calibration or 50 µg/ml standard of initial calibration.

12.10.2 The area (Extracted Ion Current Profile) of the internal standard in all analyses must be within 50 to 200 % of the corresponding area of the latest calibration standard (12 hr. time period).

12.10.3 If the area of internal standard does not meet control limits, the calculations must be checked. If a problem is not discovered, the sample must be reanalyzed.

12.10.4 If the areas are acceptable upon reanalysis, the reanalysis data is reported.

12.10.5 If the areas are unacceptable upon reanalysis, then both sets of data are submitted with the original analysis reported.

13.0 CALCULATION

13.1 Response Factor (RF).

$$RF = \frac{A_s \times C_{is}}{A_{is} \times C_s}$$

where:

A_s = Area of the characteristic ion for the compound being measured.
A_{is} = Area of the characteristic ion for the specific internal standard.
C_s = Concentration of the compound being measured (µg/ml).
C_{is} = Concentration of the specific internal standard (µg/ml).

13.2 Percent Relative Standard Deviation (%RSD).

$$\%RSD = \frac{SD}{RF_{av}} \times 100$$

where:

SD = Standard Deviation.
RF_{av} = Average response factor from initial calibration.

13.3 Percent Difference (%D).

$$\% D = \frac{|RF_{av} - RF_{cv}|}{RF_{av}} \times 100$$

where: RF_{cv} = Response factor from Calibration Verification Standard.

13.4 Concentration (Conc.).

13.4.1 <u>for water:</u>

$$\text{Conc. } (\mu g/l) = \frac{A_s \times C_{is} \times V_f \times D \times 1000}{A_{is} \times RF_{av} \times V_i}$$

13.4.2 <u>for soil/sediment</u> (on a dry weight basis):

$$\text{Conc. } (\mu g/kg) = \frac{A_s \times C_{is} \times V_f \times D \times 1000}{A_{is} \times RF_{av} \times W_s \times S}$$

where:

V_f = Final Volume of total extract (ml).
D = Secondary dilution factor.
V_i = Initial volume of water extracted (ml).
W_s = Weight of sample extracted (g).
S = (100 - % moisture in sample) / 100.

13.5 Percent Recovery (%R).

$$\% R = \frac{\text{Concentration found}}{\text{Concentration spiked}} \times 100$$

13.6 Relative Percent Difference (RPD).

$$RPD = \frac{|MSC - MSDC|}{(1/2)(MSC+MSDC)} \times 100$$

where:

MSC = Matrix Spike Concentration.
MSDC = Matrix Spike Duplicate Concentration.

13.7 Percent Breakdown.

$$\text{\% Breakdown for DDT} = \frac{\text{Total DDT degradation peak area}}{\text{Total DDT peak area}} \times 100$$

where:

Total DDT degradation peak area = DDE + DDD
Total DDT peak area = DDT + DDE + DDD.

13.8 Linear regression by the internal standard technique.

$$C_s = \left(\frac{\frac{A_s}{A_{is}} - b}{a} \right) \times C_{is}$$

Where:
Cs = concentration of target analyte
As = Area of target analyte
Cis = concentration of the internal standard
b = Intercept
a = slope of the line

$$a = \frac{N \Sigma xy - \Sigma x \Sigma y}{N \Sigma x^2 - (\Sigma x)^2}$$

$$b = \frac{\Sigma y - a \Sigma x}{N}$$

N = number of points
x = amount of analyte
y = response of instrument

13.9 Correlation Coefficient

$$r = \frac{\Sigma(x - \bar{x})(y - \bar{y})}{\sqrt{\Sigma(x - \bar{x})^2 \Sigma(y - \bar{y})^2}}$$

Where r = correlation coefficient
x = amount of analyte
y = response of instrument

$\bar{x}$ = average of x values

$\bar{y}$ = average of y values

14.0 DOCUMENTATION

14.1 The Analytical Logbook is a record of the analysis sequence; the logbook must be completed daily. Each instrument will have a separate logbook.

14.1.1 If samples require reanalysis, a brief explanation of the reason must be documented in this log.

14.2 The Standard Preparation Logbook must be completed for all standard preparations. All information requested must be completed, the page must be signed and dated by the respective person.

14.2.1 The Accutest Lot Number must be cross-referenced on the standard vial.

14.3 The Instrument Maintenance Logbook must be completed when any type of maintenance is performed on the instrument. Each instrument has a separate log.

14.4 Any corrections to laboratory data must be done using a single line through the error. The initials of the person and date of correction must appear next to the correction.

14.5 Unused blocks of any form must be X'ed and Z'ed by the analyst before submitting the data for review.

14.6 Supervisory (or peer) personnel must routinely review (at least once per month) all laboratory logbooks to ensure that information is being recorded properly. Additionally, the maintenance of the logbooks and the accuracy of the recorded information should also be verified during this review.

15.0 DATA REVIEW AND REPORTING

15.1 Initial and continuing calibration check. Verify that all calibration and continuing calibration criteria have been achieved. If the criteria had not been achieved, corrective action must be performed to bring the system in control before analyzing any samples.

15.1.1 If samples had been analyzed under non-compliant calibration criteria, all sample extracts must be re-analyzed once the system is brought into control.

15.2 Quality Control Data Review. Review all QC data. If QC criteria were not achieved, perform corrective action before proceeding with analysis.

15.2.1 In some situation, corrective action may demand that the entire sample batch be re-extracted and re-analyzed before processing data.

15.3 Chromatogram Review. The chromatogram of each sample is evaluated for target analytes.

15.3.1 Each sample may require the reporting of different target analytes. Review the login to assure that the correct target compounds are identified.

15.3.2 Manual integration of chromatographic peaks must be identified by the analysts by initialing and dating the changes made to the report.

15.4 Transfer to LIMS. Following the initial screen review, transfer the processed data to the LIMS.

15.4.1 Print the processed data and compare the printed values to the original values to verify transfer accuracy.

15.4.2 If transfer errors occurred, the errors must be corrected before the data is re-submitted.

15.5 Hardcopy Print & Data Package Assembly.

15.5.1 After successful transfer is verified, approve the data and print a hard copy.

15.5.2 Assemble the data package combining the LIMS output and instrumental data.

15.5.3 Pass the entire package forward to the supervisor for final review and release approval.

16.0 POLLUTION PREVENTION & WASTE MANAGEMENT

16.1 Users of this method must perform all procedural steps in a manner that controls the creation and/or escape of wastes or hazardous materials to the environment. The amounts of standards, reagents, and solvents must be limited to the amounts specified in this SOP. All safety practices designed to limit the escape of vapors, liquids or solids to the environment must be followed. All method users must be familiar with the waste management practices described in section 16.2.

16.2 Waste Management. Individuals performing this method must follow established waste management procedures as described in the waste management SOP, ESM003. This document describes the proper disposal of all waste materials generated during the testing of samples as follows:

16.2.1 Non hazardous aqueous wastes.

16.2.2 Hazardous aqueous wastes

16.2.3 Chlorinated organic solvents

16.2.4 Non-chlorinated organic solvents

16.2.5 Hazardous solid wastes

16.2.6 Non-hazardous solid wastes

17.0 ADDITIONAL REFERENCES

17.1 No additional references are required for this SOP.

Table 1 – Target Compounds by SW846 8270C			
Benzenethiol (1)	4-Bromophenyl phenyl ether	Di-n-octyl phthalate	5-Nitro-o-toluidine
Benzoic Acid	Butyl benzyl phthalate	Diethyl phthalate	Naphthalene
2-Chlorophenol	Benzyl Alcohol	Dimethyl phthalate	Nitrobenzene
4-Chloro-3-methyl phenol	1,1'-Biphenyl (1)	2,3-Dichloroaniline (1)	n-Nitrosodimethylamine
2,4-Dichlorophenol	Butyl Stearate (1)	Decane	4-Nitroquinoline 1-Oxide
2,4-Dimethylphenol	2-Chloronaphthalene	Octadecane (1)	N-Nitroso-di-n-propylamine
2,4-Dinitrophenol	4-Chloroaniline	bis(2-Ethylhexyl)phthalate	N-Nitrosodi-n-butylamine
2,6-Dichlorophenol	Carbazole	Ethyl methanesulfonate	N-Nitrosodiethylamine
4,6-Dinitro-2-methylphenol	Caprolactam (1)	Famphur	N-Nitrosodiphenylamine
Dinoseb	Chlorobenzilate	Fluoranthene	N-Nitrosomethylethylamine
2-Methylphenol	Chrysene	Fluorene	N-Nitrosomorpholine
3&4-Methylphenol	Cumene (1)	Hexachlorobenzene	N-Nitrosopiperidine
2-Nitrophenol	bis(2-Chloroethoxy)methane	Hexachlorobutadiene	N-Nitrosopyrrolidine
4-Nitrophenol	bis(2-Chloroethyl)ether	Hexachlorocyclopentadiene	O,O,O-Triethyl phosphorothioat
Pentachlorophenol	bis(2-Chloroisopropyl)ether	Hexachloroethane	2-Picoline
Phenol	4-Chlorophenyl phenyl ether	Hexachlorophene	Parathion
2,3,4,6-Tetrachlorophenol	1,2-Dichlorobenzene	Hexachloropropene	Pentachloroethane (1)
2,4,5-Trichlorophenol	1,2-Diphenylhydrazine	Indene (1)	Pentachlorobenzene
2,4,6-Trichlorophenol	1,3-Dichlorobenzene	Indeno(1,2,3-cd)pyrene	Pentachloronitrobenzene
2-Acetylaminofluorene	1,4-Dichlorobenzene	Isodrin	Phenacetin
4-Aminobiphenyl	2,4-Dinitrotoluene	Isophorone	Phenanthrene
Acenaphthene	2,6-Dinitrotoluene	Isosafrole	Phorate
Acenaphthylene	3,3'-Dichlorobenzidine	Kepone	Pronamide
Acetophenone	3,3'-Dimethylbenzidine	1-Methylnaphthalene	Pyrene
Aniline	1,4-Dioxane (1)	2-Methylnaphthalene	Pyridine
Anthracene	7,12-Dimethylbenz(a)anthracene	3-Methylcholanthrene	p-Phenylenediamine
Aramite	Dimethylnaphthalenes (total) (1)	4,4'-Methylenebis(2-chloroaniline)	Quinoline (1)
Atrazine (1)	Diallate	Methapyrilene	Safrole
alpha-Terpineol	Dibenz(a,h)acridine	Methyl methanesulfonate	1,2,4,5-Tetrachlorobenzene
A,A-Dimethylphenethylamine	Dibenzo(a,h)anthracene	Methyl parathion	1,2,4-Trichlorobenzene
Benzidine	Dibenzofuran	6-Methyl Chrysene (1)	1,2,3-Trichlorobenzene (1)
Benzaldehyde (1)	Dimethoate	1,4-Naphthoquinone	1,3,5-Trichlorobenzene (1)
Benzo(a)anthracene	Diphenylamine	1-Naphthylamine	Thionazin
Benzo(a)pyrene	Disulfoton	2-Naphthylamine	o-Toluidine
Benzo(b)fluoranthene	m-Dinitrobenzene	2-Nitroaniline	sym-Trinitrobenzene
Benzo(g,h,i)perylene	p-(Dimethylamine)azobenzene	3-Nitroaniline	Tetraethyl dithiopyrophosphate
Benzo(k)fluoranthene	Di-n-butyl phthalate	4-Nitroaniline	

(1) NELAC Accreditation is not offered for this compound. Results may not be useable for regulatory purposes in States where this accreditation option is not offered.

Table 2 - RECOMMENDED OPERATING CONDITIONS: Gas Chromatograph/ Mass Spectrometer	
Injection Type	Splitless
Carrier Gas (linear velocity)	Helium at 30 cm/sec*
Mass range	35-500 AMU
Electron Energy	70 volts (nominal)
Scan time	not to exceed 1 sec. per scan
Injection port temperature	200-300 °C
Source temperature	220-270 °C
Transfer line temperature	250-300 °C
Analyzer temperature	220-250 °C
Gas Chromatograph Temperature Program*	
Initial temperature	40-50 °C*
Time 1	2-4 minutes*
Column temperature rate	8-25 degrees/min*
Final temperature	290-320 °C according to column type*
Total run time	*20-40 minutes*

***** Parameter modification allowed for performance optimization as long as QC criteria are achieved.

Table 2a – SIM Group Parameters		
Group No.	**Retention Time (minutes)**	**Ions**
1	0 – 7.8	150, 64, 93, 82, 152, 99, 63, 128, 112, 42, 95
2	7.8 – 11	150, 128, 225, 142, 172, 152, 129, 223, 141, 171, 122, 127, 227, 115, 170
3	11 – 13.8	172, 152, 166, 182, 334, 266, 176, 153, 165, 330, 284, 264, 174, 154, 77, 332, 286, 268
4	13.8 – 18	266, 179, 202, 122, 268, 212, 203, 284, 178, 213, 244, 286
5	18 – 22	244, 229, 167, 122, 226, 202, 228, 149, 203
6	22 – 34.7	264, 149, 253, 278, 263, 150, 250, 139, 265, 252, 276, 138

Table 3 - DFTPP KEY IONS AND ION ABUNDANCE CRITERIA	
Mass	**Ion Abundance Criteria**
51	30-60 of mass 198
68	<2 % of mass 69
70	<2 % of mass 69
127	40-60 % of mass 198
197	<1 % of mass 198
198	Base peak, 100 % relative abundance
199	5-9 % of mass 198
275	10-30 % of mass 198
365	>1 % of mass 198
441	Present but less than mass 443
442	>40 % of mass 198
443	17-23 % of mass 442

Table 4 - INTERNAL STANDARDS	
Internal Standard (Full Scan)	**Prim/Sec. ions**
1,4-Dichlorobenzene-d4	152 / 150, 115
Naphthalene-d8	136 / 68
Acenaphthene-d10	164 / 162, 160
Phenanthrene-d10	188 / 94, 80
Chrysene-d12	240 / 120, 236
Perylene-d12	264 / 260, 265
Internal Standard (SIM)	**Prim/Sec. ions**
1,2-Dichlorobenzene-d4	152/ 150
1-Methylnaphthalene-d10	150/ 152, 122
Fluorene-d10	174/ 176
Fluoranthene-d10	212/ 213
Benzo(a)pyrene- d12	264/ 263, 265

Table 5 - Criteria for CCC and SPCC	
Initial Calibration: CCC % RSD is ≤ 30 %.	Continuing Calibration: CCC % D is ≤ 20 %
Calibration Check Compounds (CCC)	
Base Neutral	**Acid**
1,4-Dichlorobenzene	Phenol
Hexachlorobutadiene	2,4-Dichlorophenol
Acenaphthene	2-Nitrophenol
Fluoranthene	4-Chloro-3-methylphenol
N-Nitrosodiphenylamine	2,4,6-Trichlorophenol
Di-n-octyl phthalate	Pentachlorophenol
Benzo (a) pyrene	
System Performance Check Compounds (SPCC)	
Base Neutral	**Acid**
N-Nitroso-di-n-propylamine	2,4-Dinitrophenol
Hexachlorocyclopentadiene	4-Nitrophenol
Minimum acceptable average relative response factor (RRF) is 0.050 for SPCC.	

Table 6 – Full Scan Semivolatile Internal Standards with Corresponding Analytes Assigned for Quantitation			
1,4-Dichlorobenzene-d4	**Ions**	**Acenaphthene-d10**	**Ions**
Aniline	(93/66,65)	Acenaphthene	(154/153,152)
Benzaldehyde	(105)	Acenaphthylene	(152/151,153)
*Benzenethiol	(110)	*1-Chloronaphthalene	(162/127,164)
Benzyl alcohol	(108/79,77)	2-Chloronaphthalene	(162/127,164)
Bis(2-chloroethyl)ether	(93/63,95)	4-Chlorophenylphenyl ether	(204/206,141)
Bis (2-chloroisopropyl)ether	121	Dibenzofuran	(168/139)
2-Chlorophenol	(128/64,130)	Diethyl phthalate	(149/177,150)
Cumene	(105,120)	Dimethyl phthalate	(163/149,164)
Decane	(43)	*m-Dinitrobenzene	(168)
1,3-Dichlorobenzene	(146/148,111)	2,4-Dinitrophenol	(184/63,154)
1,4-Dichlorobenzene	(146/148,111)	2,4-Dinitrotoluene	(165/63,89)
1,2-Dichlorobenzene	(146/148,111)	2,6-Dinitrotoluene	(165/63,89)
1,4 Dioxane	(88)	Fluorene	(166/165,167)
*Ethyl methanesulfonate	(79/109,97)	Hexachlorocyclopentadiene	(295/237,142)
2-Fluorophenol (SURR.)	(112)	*1,4 – Naphthoquinone	(158)
Hexachloroethane	(117/201,199)	*1- Naphthylamine	(143/115,116)
Indene	(116)	*2- Naphthylamine	(143/115,116)
*Methyl methanesulfonate	(80/79,64)	2-Nitroaniline	(65/92,138)
2-Methylphenol	(108/107,79)	3-Nitroaniline	(138/108,92)
4-Methylphenol	(108/107,79)	4-Nitroaniline	(138/108,92)
*N-Nitrosodiethylamine	(102)	4-Nitrophenol	(139/109,65)
N-Nitrosodimethylamine	(74/42)	* 5 Nitro-o-toluidine	(152)
N-Nitroso-di-n-propylamine	(70/101,130)	Pentachlorobenzene	(250/252,248)
*N-Nitrosomethyethylamine	(42)	*Pentachloronitrobenzene	(237/235,272)
* N-Nitrosomorpholine	(56)	*Phenacetin	(108/109,179)
* N-Nitrosoptrrolidine	(41)	*Phorate	(75)
*O-Toluidine	(106)	*Pronamide	(173/175,145)
* Petachloroethane	(167)	*1,2,4,5-Tetrachlorobenzene	(216/214,218)
Phenol	(94)	*2,3,4,6-Tetrachlorphenol	(232/230,131)
Phenol-d5 (SURR.)	(99)	*Tetraethyldithiopyrophosphate	(322)
*2-Picoline	(93/66,92)	*Thioazin	(143)
Pyridine	(79)	2,4,6-Trichlorophenol	(196/198,200)
		2,4,5-Trichlorophenol	(196/198,200)

Table 6 (cont'd) – Full Scan Semivolatile Internal Standards with Corresponding Analytes Assigned for Quantitation

Naphthalene-d8	**Ions**	**Phenanthrene-d10**	**Ions**
*A,A-Dimethylphenethylamine	(58)	*4-Aminobiphenyl	(169/168,170)
*Acetophenone	(105/77,51)	Anthracene	(178/176,179)
Benzoic acid	(184/92,185)	Atrazine	(58)
Bis(2-chloroethoxy)methane	(93/95,123)	4-Bromophenyl phenyl ether	(248/250,141)
Caprolactam	(55)	Carbazole	(167)
4-Chloroaniline	(127)	*Diallate	(86)
4-Chloro-methylphenol	(107/144)	*Dimethoate	(87)
2,3 Dichloroaniline	(161)	Di-n-Butyl phthalate	(149/150)
2,4-Dichlorophenol	(162/164,98)	4,6-Dinitro-2-methylphenol	(198/51,105)
*2,6-Dichlorophenol	(162/164,98)	*Dinoseb	(211)
Dimethylnaphthalene	(156)	*Diphenylamine	(169/168,167)
2,4-Dimethylphenol	(122/107)	1,2-Diphenylhydrazine	(77/105)
*a,a-Dimethyl-phenethylamine	(58/91,42)	*Disulfoton	(88)
Hexachlorobutadiene	(225/223,227)	Fluoranthene	(202/101,203)
*Hexachloroprene	(213)	2-Fluorobiphenyl (SURR)	(172)
Isophorone	(82/95,138)	Hexachlorobenzene	(284/142,249)
*Isosafrole	(127)	*Isodrin	(193)
1-Methylnaphthalene	(142)	*Methapyriline	(58)
2-Methylnaphthalene	(142/141)	*Methyl Parathion	(125)
Naphthalene	(128/129,127)	N-Nitrosodiphenylamine	(169/168,167)
Nitrobenzene	(77/123,65)	*4-Nitroquinoline 1-oxide	(190)
Nitrobenzene-d5 (SURR.)	(82)	Octadecane	(57)
N-Nitroso-di-n-butylamine	(84/57/41)	*Parathion	(109)
2-Nitrophenol	(139/109,65)	Pentachlorophenol	(266/264,268)
Quinoline	(129)	Phenanthrene	(178/179,176)
*N-Nitrosopiperidine	(42/114,55)	*Pronamide	(173)
*p-Phenylenediamine	(108)	sym- Trinitrobenzene	(213)
*O,O,O-Triethylphosphorthioat	(198)	2,4,6 Tribromophenol (SURR)	(330)
*Safrole	(162)		
alpha –Terpineol	(128)	**Perylene-d12**	**Ions**
1,2,3-Trichlorobenzene	(180/182,145)	Benzo(b)fluoranthene	(252/125)
1,2,4-Trichlorobenzene	(180/182,145)	Benzo(k)fluoranthene	(252/125)
1,3,5-Trichlorobenzene	(180/182,145)	Benzo(g.h.i)perylene	(276/138,277)
		Benzo(a)pyrene	(252/253,125)
Chrysene-d12	**Ions**	*Dibenz(a,j)acridine	(279/280)
2 –Acetylaminofluorene	(181)	Dibenz(a,h)anthracene	(278/139,279)
*Aramite	(194)	*7,12-Dimethylbenz(a)anthracene	(256/241,257)
Benzidine	(184)	Di-n-Octyl Phthalate	(149)
Benzo(a)anthracene	(228/229/226)	Hexachlorophene	(196)
Bis(2-ethylhexyl)phthalate	(149/167,279)	Indeno(1,2,3-d)pyrene	(276)
Butylbenzyl phthalate	(149/91)	*3-Methylchloanthrene	(268/253)
*Chlorobenzilate	(251)	* non-routine target compound	
Chrysene	(228/226,229)		
3,3'-Dichlorobenzidine	(252/254,126)		
*p-Dimethylaminoazobenzene	(120/225,77)		
*3,3 Dimethylbenzidine	(212)		
*Famphur	(218)		
*Kepone	(272)		
* Methyl Chrysene	(242)		
Pyrene	(202/200,203)		
Terphenyl-d14 (SURR.)	(244)		

Table 6a – SIM Semivolatile Internal Standards with Corresponding Analytes Assigned for Quantitation			
1,4-Dichlorobenzene-d4	**Ions**	**Fluoranthene-d10**	**Ions**
2-Fluorophenol (Surr)	(112)	Fluoranthene	202, 101, 203
Phenol-d5 (Surr)	(99)	Pyrene	202, 203
Bis-(2-chloro-ethyl)ether	93, 63, 95	Terphenyl-d14 (Surr)	(244)
Nitrobenzene-d5 (Surr)	(82)	Benzo(a)anthracene	228, 229, 226
		Chrysene	228, 226, 229
1-Methylnaphthalene-d10	**Ions**	Bis(2-ethylhexylphthalate	149, 167, 279
Naphthalene	128, 129, 127		
Hexachlorobutadiene	225, 223, 227	**Benzo(a) pyrene-d12**	**Ions**
2-Methyl Naphthalene	142, 141, 115	Di-n-octyl phthalate	149, 150, 43
2-Fluorobiphenyl (Surr)	(172)	Benzo(b)fluoranthene	252, 253
		Benzo(k)fluoranthene	252, 125
Fluorene-d10	**Ions**	Benzo(a)pyrene	252, 253, 125
Acenaphthylene	152, 151, 153	Indeno(1,2,3-cd)pyrene	276, 277, 138
Acenaphthene	153, 152, 154	Dibenzo(a,h)anthracene	278, 139, 279
Fluorene	166, 165, 167	Benzo(g,h,i)perylene	276, 138, 277
1,2-Diphenylhydrazine	77, 105, 182		
2,4,6-Tribromophenol (Surr)	(330)		
Hexachlorobenzene	284, 286		
Pentachlorophenol	266, 264		
Phenanthrene	178, 179, 176		
Anthracene	178, 176, 179		

Table 7. STANDARD PREPARATION

Table 7A – Intermediate Calibration Standard Solution				
Stock Solution	**Stock Conc., µg/ml**	**Volume Added, µl**	**Final Vol. in $MeCl_2$, ml**	**Final Conc. µg/ml**
Semivolatile Standard Mix # 1	2,000	500	10	100
Semivolatile Standard Mix # 2	2,000	500	10	100
Semivolatile Standard Mix # 4	2,000	500	10	100
Semivolatile Standard Mix # 5	2,000	500	10	100
Semivolatile Standard Mix # 6	2,000	500	10	100
Semivolatile Standard Mix # 7	2,000	500	10	100
PAH Mixture #2	2,000	500	10	100
Semivolatile Standard Mix # 8	2,000	500	10	100
Additional Requested Compound(s) Mix	2,000	500	10	100
Pyridines Mixture	2,000	500	10	100
1,2,3-Trichlorobenzene	1,000	1,000	10	100
1,3,5-Trichlorobenzene	1,000	1,000	10	100
Butyl Stearate	10,000	200	10	200
Pentachlorophenol	1,000	1,000	10	100
B/N Surrogate Standard Mix	5,000	200	10	100
Acid Surrogate Standard Mix	7,500	134	10	100.5

Table 7A – Intermediate Calibration Standard Solution -SIM				
Stock Solution	**Stock Conc., µg/ml**	**Volume Added, µl**	**Final Vol. in $MeCl_2$, ml**	**Final Conc. µg/ml**
Semivolatile Standard Mix # 1	2,000	500	10	100
Semivolatile Standard Mix # 2	2,000	500	10	100
PAH Mixture #2	2,000	500	10	100
Semivolatile Standard Mix # 8 (Acids)	2,000	2,500	10	500
Additional Requested Compound(s) Mix	2,000	500	10	100
B/N Surrogate Standard Mix	5,000	200	10	100
Acid Surrogate Standard Mix (Full Scan)	7500	66.7	10	500

Table 7B – Initial Calibration Standards Preparation Scheme						
Standard Solution	**Intermediate Conc., µg/ml**	**Intermediate added, µl Full Scan**	**Intermediate added, µl SIM**	**Final Volume in $MeCl_2$, ml**	**Final Conc., µg/ml – Full Scan**	**Final Conc., µg/ml – SIM Scan**
STD 1	100	1,000	150	1	100	15/75 (Acids)
STD 2	100	800	100	1	80	10/50 (Acids)
STD 3	100	500	50	1	50	5/25 (Acids)
STD 4	100	250	25	1	25	2.5/12/5 (Acids)
STD 5	100	200	10	1	20	1/5 (Acids)
STD 6	100/10 (SIM)	100	20	1	10	0.2/1 (Acids)
STD 7	100	50	10	1	5	
STD 8	100	20	-	1	2	-

Table 7C – Second Source Calibration Check Standard				
Intermediate	**Intermediate Conc., µg/ml**	**Volume Used, µl (Full/SIM)**	**Final Volume in Acetone, ml**	**Final Conc., µg/ml (Full/SIM)**
Base Neutrals Mixture	100	500/ 50	1	50/ 5
Acid Mixture	100	500/ 50	1	50/ 5

Table 8a –Selected Ion Monitoring: Masses and Dwell Times		
Compound	**Mass Ion (m/z)**	**Dwell Time (ms)**
Acenaphthene	153, 152, 154	50
Acenaphthylene	152, 151, 153	50
Anthracene	178, 176, 179	50
Benzo(a)anthracene	228, 229, 226	50
Benzo(a)pyrene	252, 253, 125	50
Benzo(b)fluoranthene	252, 253	50
Benzo(g,h,i)perylene	276, 138, 277	50
Benzo(k)fluoranthene	252, 125	50
Chrysene	228, 226, 229	50
Dibenzo(a,h)anthracene	278, 139, 279	50
Fluoranthene	202, 101, 203	50
Fluorene	166, 165, 167	50
Indeno(1,2,3-cd)pyrene	276, 277, 138	50
Naphthalene	128, 129, 127	50
Phenanthrene	178, 179, 176	50
Pyrene	202, 203	50
2-Methyl Naphthalene	142, 141, 115	50
Bis-(2-chloro-ethyl)ether	93, 63, 95	50
Pentachlorophenol	266, 264	50
Hexachlorobutadiene	225, 223, 227	50
1,2-Diphenylhydrazine	77, 105, 182	50
Bis(2-ethylhexylphthalate	149, 167, 279	50
Di-n-octyl phthalate	149, 150, 43	50
Hexachlorobenzene	284, 286	50
2-Fluorophenol	112, 64, 63	50
Phenol-d5	99, 42	50
Nitrobenzene-d5	82, 128	50
2-Fluorobiphenyl	172, 171, 170	50
2,4,6-Tribromophenol	330, 332, 334	50
Terphenyl-d14	244, 122	50

Table 9. REPORTING LIMITS

Compound	Water	Soil	Compound	Water	Soil
	µg/l	µg/kg		µg/l	µg/kg
Benzoic Acid	20	667	Carbazole	5	167
2-Chlorophenol	5	167	Chlorobenzilate	5	167
4-Chloro-3-methylphenol	5	167	Chrysene	5	167
2,4-Dichlorophenol	5	167	bis(2-Chloroethoxy)methane	5	167
2,4-Dimethlyphenol	5	167	bis(2-Chloroethyl)ether	5	167
2,4-Dinitrophenol	20	667	Bis(2-Chloroisopropyl)ether	5	167
4,6-Dinitro-o-cresol	20	667	4-Chlorophenyl phenyl ether	5	167
Dinoseb	5	167	1,2-Dichlorobenzene	5	167
2-Methylphenol	5	167	1,3-Dichlorobenzene	5	167
4-Methylphenol	5	167	1,4-Dichlorobenzene	5	167
2-Nitrophenol	5	167	2,4-Dinitrotoluene	5	167
4-Nitrophenol	20	667	2,6-Dinitrotoluene	5	167
Pentachlorophenol	20	667	3,3'-Dichlorobenzidine	5	167
Phenol	5	167	3,3’-Dimethylbenzidine	5	167
2,3,4,6-Tetrachlorophenol	5	167	7,12-Dimethylbenz(a)anthracene	5	167
2,4,5-Trichlorophenol	5	167	Diallate	5	167
2,4,6-Trichlorophenol	5	167	Dibenzo(a,h)anthracene	5	167
2-Acetylaminofluorene	5	167	Dibenzofuran	5	167
4-Aminobiphenyl	5	167	Dimethoate	5	167
Acenaphthene	5	167	Diphenylamine	5	167
Acenaphthylene	5	167	Disulfuton	5	167
Acetophenone	5	167	m-Dinitrobenzene	5	167
Aniline	2	67	p-(Dimethylamine)azobenzene	5	167
Anthracene	5	167	Di-n-butyl phthalate	5	167
Aramite	5	167	Di-n-octyl phthalate	5	167
A,A-Dimethylphenethylamine	5	167	Diethyl phthalate	5	167
Benzo(a)anthracene	5	167	Dimethyl phthalate	5	167
Benzo(a)pyrene	5	167	bis(2-Ethylhexyl)phthalate	5	167
Benzo(b)fluoranthene	5	167	Ethyl methansulfonate	5	167
Benzo(g,h,i)perylene	5	167	Famphur	5	167
Benzo (k)fluoranthene	5	167	Fluoranthene	5	167
4-Bromophenyl phenyl ether	5	167	Fluorene	5	167
Butyl benzyl phthalate	5	167	Hexachlorobenzene	5	167
Benzyl Alcohol	5	167	Hexachlorobutadiene	5	167
2-Chloronaphthalene	5	167	Hexachlorocyclopentadiene	20	667
4-Chloroaniline	5	167	Hexahloroethane	5	167

Compound	Water	Soil	Compound	Water	Soil
	µg/l	µg/kg		µg/l	µg/kg
Hexachlorophene	5	167	N-Nitrosodiethylamine	5	167
Hexachloropropene	5	167	N-Nitrosodiphenylamine	5	167
Indeno(1,2,3-cd)pyrene	5	167	N-Nitrosomethylethylamine	5	167
Isodrin	5	167	N-Nitrosomorpholine	5	167
Isophorone	5	167	N-Nitrosopiperidine	5	167
Isosafrole	5	167	N-Nitrosopyrrolidine	5	167
Kepone	5	167	O,O,O Triethylphosphorothioat	5	167
2-Methylnaphthalene	5	167	2-Picoline	5	167
3-Methylcholanthene	5	167	Parathion	5	167
Methapyrilene	5	167	Pentachlorobenzene	5	167
Methyl Methanesulfonate	5	167	Pentachloronitrobenzene	5	167
Methyl Parathion	5	167	Phenacetin	5	167
1,4 Naphthoquinone	5	167	Phenanthrene	2	67
1-Naphthylamine	5	167	Phorate	5	167
2-Naphthylamine	5	167	Pronamide	5	167
2-Nitroaniline	5	167	Pyrene	2	67
3-Nitroaniline	5	167	Pyridine	2	67
4-Nitroaniline	5	167	p-Phenylenediamine	5	167
5-Nitro-o-toluidine	5	167	Safrole	5	167
Naphthalene	5	167	1,2,4,5 Tetrachlorobenzene	5	167
Nitrobenzene	5	167	1,2,4-Trichlorobenzene	2	67
n-Nitrosodimethylamine	2	67	Thionazin	5	167
4-Nitroquinoline-1-Oxide	10	333	o-Toluidine	5	167
N-Nitroso-di-n-propylamine	2	33	sym-Trinitrobenzene	5	167
N-Nitrosodi-n-butylamine	5	167	Tetraethyl dithiopyrophosphate	5	167

Table 10. Selected Ion Monitoring Reporting Limits

Compound	Water	Soil	Compound	Water	Soil
	µg/l	µg/kg		µg/l	µg/kg
Pentachlorophenol	1.0	33	Fluoranthene	0.2	3.3
Acenaphthene	0.2	6.6	Fluorene	0.2	6.6
Acenaphthylene	0.2	6.6	Hexachlorobenzene	0.2	6.6
Anthracene	0.2	6.6	Hexachlorobutadiene	0.2	6.6
Benzo(a)anthracene	0.2	6.6	Indeno(1,2,3-cd)pyrene	0.2	6.6
Benzo(a)pyrene	0.2	6.6	2-Methylnaphthalene	0.2	6.6
Benzo(b)fluoranthene	0.2	6.6	Naphthalene	0.2	6.6
Benzo(g,h,i)perylene	0.2	6.6	Phenanthrene	0.2	6.6
Benzo (k)fluoranthene	0.2	6.6	Pyrene	0.2	6.6
Chrysene	0.2	6.6	bis(2-Chloroethyl)ether	0.2	6.6
Dibenzo(a,h)anthracene	0.2	6.6	Bis (2-ethylhexyl) phthalate	0.2	6.6

1,2-Diphenylhydrazine	0.2	6.6	Di-n-octyl phthalate	0.2	6.6

APPENDIX J (CD)

Chevron Environmental Management Company

Groundwater Remediation System

Operations, Maintenance, and Monitoring Manual

Former Tappan Terminal Site
Hastings on Hudson, New York

January 2013

Revised September 2013

Anthony M. Roseamelia
Staff Environmental Engineer

William T. McCune
Principal Geologist/Certified Project Manager 2

Groundwater Remediation System

Operations, Maintenance, and Monitoring Manual

Former Tappan Terminal Site
Hastings on Hudson, New York

Prepared for:
Chevron Environmental Management Company

Prepared by:
ARCADIS
6723 Towpath Road
P.O. Box 66
Syracuse
New York 13214-0066
Tel 315.449.3105
Fax 315.446.5807

Our Ref.:
B0046918.0001

Date:
January 2013

This document is intended only for the use of the individual or entity for which it was prepared and may contain information that is privileged, confidential and exempt from disclosure under applicable law. Any dissemination, distribution or copying of this document is strictly prohibited.

Table of Contents

Site Entry Log **vi**

Operations, Maintenance, and Monitoring Site Contacts **vii**

1. Introduction **1**

1.1 Site Description and History 1

1.2 Identified Remedial Areas and Constituents of Concern in Site-Wide Groundwater (AOC 3) 2

1.3 System Operation Objectives 3

1.4 Roles and Responsibilities 3

1.5 Acknowledgements 4

1.6 Operations, Maintenance, and Monitoring Manual Organization 4

2. System Overview **6**

2.1 Extraction Wells 6

2.2 Equipment Enclosure and Solids Settling Tank 6

2.3 Infiltration Trenches and Injection Wells 8

2.3.1 Infiltration Trenches 8

2.3.2 Injection Wells 9

2.4 System Control Overview 9

2.4.1 Extraction Wells 9

2.4.2 Equipment Enclosure and Solids Settling Tank 10

2.4.3 Infiltration Trenches and Injection Wells 13

3. System Startup and Shutdown Procedures **14**

3.1 Pre-Startup Procedure 14

3.2 Initial System Startup Procedure 14

3.3 Routine System Startup Procedure 14

3.4 System Shutdown Procedures 14

4. System Operation, Maintenance, and Monitoring **15**

4.1 System Operation 15

4.1.1 Key Process Variables 15

4.1.2 Site Access 16
4.1.3 Permit to Work Form 16
4.1.4 Confined Space 16
4.1.5 Alarm Response 17
4.1.6 Emergency Response 17
4.2 System Maintenance 18
4.2.1 Routine System Maintenance 18
4.2.2 Non-Routine Maintenance 19
4.2.3 Preventative Maintenance 20
4.2.3.1 Package Air Compressor System 20
4.2.3.2 Oxygen Generator/Receiving Tank 21
4.2.3.3 Flow Totalizer Cleaning 21
4.2.3.4 Solids Removal 21
4.2.3.5 Instrumentation Calibration/Replacement 21
4.3 System Monitoring 22
4.3.1 Daily Monitoring 22
4.3.2 Weekly Monitoring 22
4.3.3 Annual Monitoring 23
4.3.4 Groundwater Monitoring Considerations 23
5. Record Keeping 24
5.1 System Data 24
5.2 Operations, Maintenance, and Monitoring Logs 24
5.3 Sampling Data 24
5.4 Operator Deliverables 25
6. Sampling and Analysis 26
6.1 Baseline Sampling 26
6.2 Routine Sampling 26

6.3 Non-Routine Sampling and Analysis (Sample Collection by Others) 26

6.4 Waste Characterization 27

6.5 Laboratory Requirements 27

7. Waste Management 28

8. Health and Safety 29

8.1 Site-Specific Health and Safety Plan 29

8.2 Specific Activities 29

9. Management of Change 30

10. Training and Awareness 31

11. Compliance Requirements 32

Tables

1 Project Contacts

2 Prioritized Emergency Contact List

3 Preventative Maintenance Tracking Log

4 System Sampling Schedule and Requirements

5 Critical Safety Device, Alarms, and Setpoints

Figures

1 Site Location Map

2 Site Plan

3 Chlorobenzene Hot Spot Location Map

4 System Process Flow Diagram

Appendices

A Equipment Literature

B Record Drawings

C Standard Operating Procedures

Table of Contents

SOP 1: Oxygen Enriched Environment Equipment Enclosure Entry
SOP 2: System Pre-Startup
SOP 3: Initial System Startup
SOP 4: Routine System Startup
SOP 5: System Shutdown
SOP 6: Lock Out/Tag Out
SOP 7: Alarm Testing
SOP 8: Chain of Custody, Handling, Packing, and Shipping
SOP 9: Confined Space Entry
SOP 10: Electrical Safety
SOP 11: Personal Protective Equipment
SOP 12: First Aid
SOP 13: Hazardous Communication
SOP 14: Tailgate Meetings
SOP 15: Stop Work
SOP 16: Field Equipment Decontamination
SOP 17: Excavation and Trenching
SOP 18: Utility Clearance
SOP 19: Hazardous Material Handling
SOP 20: Field Log Book Entries
SOP 21: System Enclosure Entry
SOP 22: Hazardous Atmosphere Equipment Enclosure Entry

D Permit to Work/High Risk Permit to Work Forms

E System OMM Logs/Checklists

F Material Safety Data Sheets

G Management of Change Form Template

H Completed Management of Change Documentation

I OMM Manual Management of Change Form

J System Operator Training Certificates

K USEPA Injection Well Permit

Site Entry Log

All ARCADIS U.S., Inc. (ARCADIS) employees and subcontractors who will be performing work on the former Tappan Terminal Groundwater Remediation System must first acknowledge that they have read this Operations, Maintenance, and Monitoring Manual prior to beginning work. By signing the entry log, you indicate that you have read the OMM Manual and agree to follow the Standard Operating Procedures and ARCADIS health and safety policies described in the Health and Safety Plan.

Date and Time	Name	Company

Operations, Maintenance, and Monitoring Site Contacts

Name	Company and Position	Phone Number
Jason Waldron	ARCADIS, Primary Operator	973.489.2633 (cell)
John Giaimis	ARCADIS, Secondary Operator	201.398.4321 (office) 973.583.8120 (cell)
Anthony Roseamelia	ARCADIS, Engineer	315.671.9449 (office) 315.720.0226 (cell)
Daniel Moran	ARCADIS, Engineer	315.671.9278 (office) 315.525.5927 (cell)
Matthew Shattuck	ARCADIS, Engineer	414.277.6270 (office) 414.339.0542 (cell)
Greg Mason	ARCADIS, Health and Safety Coordinator	859.253.9036 (14) (office) 859.806.0746 (cell)
Jo Ann Robertson	ARCADIS, Task Manager	315.671.9143 (office)
Andrew Korik	ARCADIS, Task Manager	315.671.9323 (office)
William McCune	ARCADIS, Project Manager	315.671.9172 (office) 315.420.4348 (cell)
Mark Stella	Chevron Environmental Management Company, Project Manager	713.432.2643 (office) 281.382.0281 (cell)

1. Introduction

On behalf of Chevron Environmental Management Company (CEMC), ARCADIS U.S., Inc. (ARCADIS) prepared this Operations, Maintenance, and Monitoring Manual (OMM Manual) for the Former Tappan Terminal Site located in Hastings on Hudson, Westchester County, New York (site). This OMM Manual serves as a guide and reference for the operations, maintenance, and monitoring (OMM) of the Groundwater Remediation System (system) by ARCADIS operating personnel and to meet the requirements of CEMC operational excellence (OE) tenets. The system was installed to satisfy the requirements of the New York State Department of Environmental Conservation (NYSDEC) Record of Decision (ROD; NYSDEC 2006). The ROD (NYSDEC 2006) addresses site-wide groundwater (defined as Area of Concern [AOC] 3) at the site (3-60-015).

This OMM Manual will be reviewed and updated annually, if necessary, to validate that the OMM Manual includes the most current operational practices. Updates to this OMM Manual will follow the requirements of the management of change (MOC) process, which is discussed in Section 9.

1.1 Site Description and History

The site is located on 7.7 acres along the Hudson River waterfront (Figure 1). The property of the former Uhlich Color Company (Uhlich), which is located along the railroad tracks, defines the eastern boundary of the site as shown on the Site Plan (Figure 2). Limited access to the property is from Railroad Avenue at the southeast corner of the site and over the Zinsser Bridge, which crosses the railroad tracks. The Zinsser Bridge has fallen into disrepair and is no longer open to vehicular traffic. Both the former Tappan Terminal and Uhlich Site are surrounded by a chain-link fence. An access agreement has been arranged with the adjacent Harbor at Hastings Site to allow vehicular access to the site through the adjacent property.

The site has a long history of manufacturing and chemical use by several owners and occupants. The landmass comprising the site was created by disposal of man-made fill into the Hudson River between 1868 and 1970. This fill material typically consisted of sand and gravel mixed with bricks, concrete, stone, timber, ash, slag, shells, and other debris. Between 1897 and 1955, the site was owned by Zinsser & Company and was used for the manufacture of dyes, pigments, and photographic chemicals. In 1955, the Harshaw Chemical Company purchased the Zinsser Company and continued operations at the site. In 1961, Tappan Tanker Terminal purchased the property and began operating a petroleum distribution facility on the western portion of the site. Beginning in 1964, Paul Uhlich & Company leased, and then purchased, the eastern portion of the site for the manufacture of pigments. This operation later became the Uhlich Color Company. Uhlich was recently acquired by Magruder Color Company and has discontinued

operations at the site. In 1975, Mobil Oil Company (Mobil) purchased the western portion of the site and continued petroleum distribution operations.

Sampling of various media at the site was performed between 1985 and 1989. In 1987, the NYSDEC listed the site as a Class 2 Site in the Registry of Inactive Hazardous Waste Disposal Sites in New York. A Class 2 Site is a site where hazardous waste presents a significant threat to the public health or the environment and action is required.

During a 1992 repair of a sewer pipe at the site, evidence of a petroleum release on both properties was discovered. Petroleum-impacted soil was stockpiled and later sent off site for disposal. The extent of petroleum impacts was investigated between 1992 and 1994. In 1994, an oil remediation plan was approved under the NYSDEC's Spill Response Program and Mobil and Uhlich entered into a Stipulation Agreement to remediate this spill.

In 1996, Mobil entered into a Voluntary Agreement with the NYSDEC to investigate petroleum contamination on the western portion of the site. Because none of the potentially responsible parties agreed to perform a comprehensive investigation of the entire site, the site was referred for a state-funded investigation in 1998. However, after 1998, Mobil conducted focused investigations and technology pilot studies on impacts present on their portion of the site. Uhlich ceased operations at the site in 2002, and most buildings at the site were demolished in early 2003.

In addition to the site operators identified above, several corporate mergers and acquisitions have occurred. The Harshaw Chemical Company was purchased by Kewanee Industries in 1966, which was acquired by the Gulf Oil Corporation in 1977. Gulf Oil Corporation merged with the Chevron Chemical Corporation in 1985. Mobil Oil Corporation merged with Exxon Corporation to form Exxon/Mobil in 1999.

The site is located adjacent to the Harbor at Hastings Site, a Class 2 inactive hazardous waste disposal site that is contaminated with polychlorinated biphenyls, metals, and polycyclic aromatic hydrocarbons.

1.2 Identified Remedial Areas and Constituents of Concern in Site-Wide Groundwater (AOC 3)

The principal source of chlorobenzene appears to have been a former processing area located northwest of former Building 57. The site conceptual model indicates that pigment mixtures containing chlorobenzene released near this area migrated both with groundwater flow toward the southwest and laterally to the north through the subsurface, along a former sanitary sewer line oriented perpendicular to groundwater flow. Dissolved-

phase chlorobenzene in groundwater has been observed to be concentrated at several hot spot locations along the former sanitary sewer line in the immediate vicinity of the former chlorobenzene area, which is located northwest of the source area toward the Hudson River (Figure 3).

1.3 System Operation Objectives

The objective of the system is to accelerate the cleanup of site groundwater. This will occur by enhancing the natural biodegradation of chlorobenzene by stimulating the indigenous biological population with increased levels of dissolved oxygen (DO) in groundwater, in conjunction with monitored natural attenuation (MNA), to meet the groundwater remedial cleanup goals for the site.

The objective of the system is to treat chlorobenzene-contaminated groundwater in the subsurface with in-situ oxygen injection technology. At the system influent, groundwater from the system extraction wells will be monitored for informational purposes to check for diminished chlorobenzene concentrations and system influent characteristics; however, the primary function of the system extraction wells will be to provide water to the system for oxygen injection.

1.4 Roles and Responsibilities

Mark Stella will serve as CEMC's Project Manager (PM) and will direct the technical and administrative aspects of the project. Mr. Stella will be the primary CEMC contact in connection with completing all work associated with the AOC 3 Remedial Design/ Remedial Action Work Plan. Key project personnel and contacts are summarized in the OMM Site Contacts table provided on page vii of this OMM Manual.

The ARCADIS PM is responsible for providing resources and completing project activities in accordance with this OMM Manual and for meeting all regulatory and contractual requirements. The ARCADIS PM is also responsible for verifying that all work at the site is conducted in a safe manner and that the project meets the requirements established by ARCADIS and CEMC.

The ARCADIS Task Managers and Engineers will work directly with the ARCADIS PM, complete tasks assigned, and will manage the routine and non-routine OMM activities at the site.

The ARCADIS System Operators (primary and secondary) will perform the OMM of the system as described herein. The System Operator will perform OMM activities required to maintain normal operation of the system to meet design parameters. System Operators

will document OMM activities in the OMM logs as further discussed below. The System Operators must fully read and understand all components of this OMM Manual. No changes to the system by the operator are authorized without the prior written approval of the PM or Engineer. The PM and/or Engineer will determine if the change warrants following MOC procedures, which are further discussed below.

All OMM must be performed by qualified personnel. The System Operator will be familiar with system components (e.g., process piping, electrical controls and components, pumps). Any OMM conducted by unqualified personnel may result in serious injury, death, property damage, or environmental implications.

All ARCADIS and subcontractor personnel must adhere to the procedures outlined in this OMM Manual during the performance of their work. Each person is responsible for completing tasks safely and initiating stop work authority (SWA) if any unsafe acts or conditions are observed. No person may work in a manner that will conflict with these procedures. Subcontractors or any other site personnel who violate safety procedures can and will be dismissed from the site.

The ARCADIS Health and Safety Coordinator, in conjunction with the Task Managers and Engineers, will manage training requirements, making sure that individuals at the site are trained in accordance with CEMC and ARCADIS training requirements, and will assist with the HASP management and implementation.

1.5 Acknowledgements

All ARCADIS employees and subcontractors who will be performing work on the system must first acknowledge that they have read and understand the OMM Manual and HASP. Documentation that ARCADIS and subcontractors have read and understand this OMM Manual and the HASP, prior to beginning work, will be provided by signing the Site Entry Log, which is provided on page vi of this OMM Manual.

1.6 Operations, Maintenance, and Monitoring Manual Organization

The remainder of this OMM Manual is organized into the following sections:

- Section 2 provides a system overview and describes the system processes, equipment, and controls.
- Section 3 describes the system startup and shutdown procedures.
- Section 4 presents system operation, maintenance, and monitoring requirements.

- Section 5 provides record keeping requirements and System Operator deliverables.
- Section 6 presents sampling and analysis requirements.
- Section 7 describes system waste management responsibilities.
- Section 8 provides health and safety considerations and requirements.
- Section 9 discusses the MOC process.
- Section 10 provides training and awareness considerations and requirements.
- Section 11 presents compliance requirements.

System operation objectives, processes, and equipment are likely to evolve in the future; therefore, this OMM Manual is considered a living document. This OMM Manual will be updated as needed and reviewed annually.

2. System Overview

This section describes individual system components. Equipment literature and an equipment list are provided in Appendix A; system Record Drawings are included as Appendix B.

The general system components include extraction wells, equipment enclosure and solids settling tank, infiltration trenches, and injection wells. A process flow diagram is provided on Figure 4. Each general component of the system is described below.

2.1 Extraction Wells

Two 6-inch-diameter groundwater extraction wells (EW-1 and EW-2) were installed to supply groundwater to the system. Each extraction well is installed to a depth of approximately 19 feet below original site grade (depth of 21 feet after 2-foot cap is installed) and is constructed of 6-inch-diameter steel well casing with a stainless steel screened interval from 12 to 17 feet below the original site grade (14 to 19 feet after 2-foot cap is installed). Each extraction wellhead is enclosed in an open-bottom, 7-foot-tall, 4-foot square concrete vault with a torsion-assisted, H-20-rated lockable hatch. The vaults are included to provide access to instrumentation and electrical conduit for security purposes to prevent damage due to vandalism or inadvertent collision, and for OMM purposes.

Each extraction well is equipped with a 4-inch submersible well pump (P-100 and P-110). The well pump discharge piping is constructed of 2-inch-diameter Standard Dimension Ration (SDR) 11 high-density polyethylene (HDPE) pipe that exits the well casing below grade, within the vault, via a pitless adaptor. Incorporation of the pitless adaptor allows for easy pump removal for maintenance purposes.

2.2 Equipment Enclosure and Solids Settling Tank

Site groundwater from the extraction wells is conveyed below grade through 2-inch SDR 11 HDPE forcemain piping to the equipment enclosure. The forcemain piping transition from below grade to the equipment enclosure is insulated and heat traced to prevent freezing during cold months of operation. Once inside the equipment enclosure, piping transitions to 2-inch Schedule 80 polyvinylchloride (PVC) and the groundwater from each extraction well is directed through a respective flow meter that measures the instantaneous and totalized flow rate from each extraction well. The lines from each extraction well combine into a 3-inch Schedule 80 PVC pipe header, which is directed to a 1,450-gallon equalization tank (T-200).

Groundwater from T-200 is pumped via transfer pump P-200 through the venturi injector, which is used to amend oxygen into the groundwater flow, and then through a flash reactor to promote adequate mixing.

Oxygen is supplied to the venturi injector by the oxygen supply system, which consists of a compressed air supply package system (rotary screw air compressor, air tank, and refrigerated air dryer), an oxygen generator, and an oxygen receiving tank. Solenoid valve SV-900 is installed in the oxygen supply line to the venturi injector. The solenoid valve automatically opens and closes based on system conditions, specifically the operation of transfer pump P-200. The oxygen supply line to the venturi injector is constructed of ¼-inch steel tubing and includes a backup check valve and a flow meter for monitoring oxygen flow to the venturi injector. The oxygen supply system is capable of supplying oxygen to the venturi injector at a rate of up to 100 standard cubic feet per hour (scfh).

Oxygenated groundwater from the venturi injector/flash reactor is conveyed to the exterior of the enclosure via heat-traced/insulated 3-inch Schedule 80 PVC to a heat traced/insulated 5,500-gallon solids settling tank (T-400) for the removal of any large suspended particles that may have precipitated out of solution as a result of groundwater oxygenation.

Removing the bulk of the precipitated solids prior to discharge to the infiltration trenches and injection wells is beneficial to the longevity of the system by avoiding premature fouling and diminished capacity. One primary system influent concern is slightly elevated total dissolved solids (TDSs), specifically dissolved ferrous iron, and the precipitation of iron out of solution (conversion to ferric iron) due to oxygen injection. Precipitated iron can lead to premature fouling of downstream components, including the infiltration trenches and injection wells as well as the discharge piping to each location. The solids settling tank is installed downstream of the oxygen injection system to assist with the removal of precipitated iron and other suspended solids to reduce precipitated solids accumulation in downstream System components. The inlet and outlet fittings of the solids settling tank are configured to promote settling at the inlet and supernatant decant at the outlet by use of purposely orientated “T”s as shown in the Record Drawings included as Appendix B.

Supernatant gravity drains from a decant port near the top of T-400 via heat traced/ insulated 6-inch Schedule 80 PVC, back inside the equipment enclosure, to the top of a 1,450-gallon decant tank (T-300). From the decant tank, water is conveyed through 3-inch Schedule 80 PVC via injection pump P-300 to the discharge manifold. Prior to entering the discharge manifold, oxygenated water passes through a flow meter to

measure the instantaneous and totalized flow injection rate. The 3-inch discharge manifold header is reduced for each discharge location to 1½-inch Schedule 80 PVC.

Each discharge location is equipped with a globe (throttling) valve that is used to adjust the flow to each discharge location dependent upon the rate at which each infiltration trench or injection well location is accepting water. The throttling valves can also be used to target a particular location if needed.

Flow to each of the nine discharge locations (infiltration trenches and injection wells) is routed through a respective inline flow totalizer to record the volume of oxygenated water sent to each discharge location. Each discharge piping transition from within the equipment enclosure to below grade is insulated and heat traced to prevent freezing during cold months of operation.

The equipment enclosure is a 40- by 8-foot modified shipping container equipped with barn-style doors on the northern end and a man door on the western side. The equipment enclosure is also equipped with two electric unit heaters/thermostat, interior and exterior lighting, exhaust fan and louver, electrical receptacles, and a leak detection sump. The equipment enclosure and solids settling tank are placed on a 55- by 10½-foot concrete pad.

2.3 Infiltration Trenches and Injection Wells

From the equipment enclosure, oxygenated groundwater is pumped to five infiltration trenches and four injection wells via 1½-inch SDR 11 HDPE piping. The infiltration trench and injection well components are further discussed below.

2.3.1 Infiltration Trenches

Five infiltration trenches (Trenches 1, 2, 3, 4, and 5) were installed just upgradient from each of the high-concentration chlorobenzene source areas. Infiltration Trenches 1, 2, and 3 are approximately 75 feet long and Trenches 4 and 5 are approximately 50 feet long. The length of each infiltration trench is based on the approximate overall length of the adjacent chlorobenzene plume.

Each infiltration trench includes a 48-inch-diameter prefabricated HDPE manhole; the 1½-inch SDR 11 HDPE discharge piping is routed to this manhole, down to the 4-inch-diameter perforated ridged HDPE pipe at the bottom of the trench. The manhole also houses the 2-inch-diameter trench access well, which will be used for sample collection as required and to monitor for trench fouling based on increased water level in the well. Each trench has clean-out access points on either end to help with trench pipe

cleaning/maintenance as required. Each clean-out access point is installed in a 6-inch by 5-foot (3-foot after cap is installed) lockable well cover with cement base.

2.3.2 Injection Wells

Four injection wells (IW-1, IW-2, IW-3, and IW-4) were installed near Trenches 1 and 2. Two injection wells (IW-1 and IW-2) were installed immediately upgradient of Trench 1 and two injection wells (IW-3 and IW-4) were installed immediately upgradient of Trench 2.

Each injection well is installed to a depth of 18 to 19 feet (20 to 21 feet after 2-foot cap is installed), constructed of 4-inch PVC well casing with a stainless steel screened interval from 11/12 to 16/17 feet below grade (13/14 feet to 18/19 feet after 2-foot cap is installed). Each injection wellhead is enclosed in an open-bottom, 7-foot tall, 4-foot square concrete vault with a torsion-assisted H-20 rated lockable hatch. The 1½-inch HDPE discharge pipe penetrates the wall of the concrete vault, where it transitions to Schedule 80 PVC and is directed down the injection well through a well seal. The vaults are included in the design to provide access to instrumentation conduit, for security purposes to prevent damage due to vandalism or inadvertent collision, and for OMM purposes.

2.4 System Control Overview

All control panels for the system are located within the equipment enclosure. The system is be equipped with a C-More human/machine interface, which allows for real-time remote monitoring and control as well as automatic transmission of system alarm condition notifications to OMM team members via text messages and email. The system controls for each major system component are described below.

2.4.1 Extraction Wells

Each extraction well is equipped with a level transducer, which monitors the groundwater level within the well to protect the submersible well pumps from running dry. When the level in the well drops to the low-low level set point, above the intake of the submersible well pump, the extraction well pump will shut down.

During previous site investigations and during well installation and yield testing, it was observed that the wells on site recharge relatively quickly and should provide a steady supply of groundwater for the system. If the low-low level set point is reached and the extraction well pump is disabled, a high level set point is be programmed to enable the pump when the Hand/Off/Auto control setting of the extraction well pump is set to Auto.

Each of the extraction well influent lines is equipped with a flow meter to monitor influent flow from each extraction well. If a leak in the influent piping or any other malfunction occurs that would cause a low-flow situation, a low-flow set point alarm disables the operation of the respective extraction well pump. The low-flow set point alarm will not be triggered until after the programmed time delay has expired.

2.4.2 Equipment Enclosure and Solids Settling Tank

Equalization tank T-200 is equipped with a level controller with high-high and low-low level alarm set points. The level controller is programmed to work in tandem with the transfer pump P-200 variable frequency drive (VFD) to maintain a specified level set point in T-200. Equalization tank T-200 is also equipped with a low-low and a high-high level float switch. The operation of the extraction well pumps will be disabled by activation of the high-high level set point of the level controller or by the high-high level float switch.

The low-low set point of the controller and low-low level float switch at equalization tank T-200 protects transfer pump P-200 from running dry. Transfer pump P-200 is equipped with a VFD fault alarm to disable the operation of the extraction well pumps when the transfer pump is called to operate and does not respond. A pressure switch is installed in the discharge piping of P-200 to prevent over-pressurization of the system in the event of downstream blockage or inadvertent valve closing. The P-200 discharge piping is also equipped with a flow meter to measure flow from P-200. If a leak in the P-200 discharge piping or any other malfunction occurs that would cause a low-flow situation, a low-flow alarm set point will disable the system. The low-flow set point alarm will not be triggered until after the programmed time delay has expired.

Operation of the solenoid valve in the oxygen supply line (SV-900) to the venturi injector is programmed to open and close based on applicable alarm conditions, specifically the operation of transfer pump P-200. When the solenoid valve closes due to no system flow from P-200, operation of the oxygen generator and air compressor will automatically stop by means of integrated pressure switches associated with the air compressor tank and oxygen receiving tank as designed by the manufacturer.

Oxygen receiving tank T-900 is equipped with a low-pressure switch to monitor both the pressure within T-900 and the oxygen pressure being supplied to the venturi injector. If the low-pressure set point is activated, the extraction well pumps and transfer pump will shut down and valve SV-900 will close. The primary purpose of the low-pressure alarm is to verify that adequate oxygen is being supplied to the groundwater flow to achieve the DO concentration needed in the discharge to the injection locations. The pumps will not operate and the valve will not open until the alarm is acknowledged. In the event of a low-pressure condition in T-900 and as a precautionary measure, the equipment enclosure

oxygen sensor reading will be observed to verify that an oxygen-enriched environment is not present (T-900 is not leaking) prior to acknowledging the alarm. Once the oxygen concentration in the equipment enclosure is verified to be in normal range, the alarm will be acknowledged to allow sufficient pressure to accumulate in the oxygen receiving tank and continued system operation. Repeated occurrences will initiate a temporary shutdown of operations until the cause of the low tank pressure is identified and repairs are made as needed. Standard Operating Procedure (SOP) 1: Oxygen Enriched Environment Equipment Enclosure Entry is provided in Appendix C.

A high-high level float switch is installed in solids settling tank T-400 to shut down the entire system when activated. The float is included as a precaution in the event that flow out of the solids settling tank is restricted in any manner that would cause a high level tank condition. Additionally, a motorized ball valve (XCV-200) is installed within the equipment enclosure in the T-400 influent piping, which will automatically close when the system is not operating to prevent back flow of water from T-400 into the equipment enclosure. The purpose of the motorized valves is to not solely depend upon the check valves of the system piping to prevent backflow from the solids settling tank. Check valves used in this capacity have been observed to fail at other OMM locations.

The motorized valve has a discord alarm to shut down system pumps and to notify System Operators if the valve fails to close or open as programmed. The motorized valve is programmed to open prior to activation of P-200 and to close soon (set on a time delay) after the operation of P-200 is stopped. Additionally, the motorized valve is equipped with battery backup to force the valve to the closed position in the event of power failure.

Decant tank T-300 is equipped with a level controller with high-high and low-low level alarm set points. The level controller is programmed to work in tandem with the injection pump P-300 VFD to maintain a specified level set point in T-300. Decant tank T-300 is also equipped with low-low and high-high level float switches. Activation of the high-high level float switch or the high-high level set point of the level controller will disable the extraction well pumps and transfer pump P-200 and will close valves SV-900 and XCV-200. Activation of the low-low level float switch or the low-low level set point of the level controller will disable injection pump P-300 to protect the pump from running dry. Transfer pump P-300 is equipped with a VFD fault alarm to disable the operation of the extraction well pumps and P-200, close valves SV-900 and XCV-200, and alarm at the programmable logic controller when the injection pump is called to operate and does not respond.

A pressure switch is installed in the discharge piping of P-300 to prevent over-pressurization of the system in the event of downstream blockage or inadvertent valve

closing. The P-300 discharge piping is also equipped with a flow meter to measure instantaneous and total system discharge flow to the infiltration trenches and injection wells. If a leak in the P-300 discharge piping or any other malfunction occurs that would cause a low-flow situation, a low-flow alarm set point will disable the system. The low-flow set point alarm will not be triggered until the programmed time delay has expired.

The tank T-200 and T-300 vent fans provide positive ventilation of the tank headspace to the atmosphere to prevent the potential for hazardous gasses to collect in the tanks. To indicate proper operation of the vent fans, vacuum switches are installed in each of the tank T-200 and T-300 vent lines. The system programming includes an interlock to disable the entire system, with the exception of the tank vent fans, in the event that a fan malfunctions or the vent becomes blocked. It should be noted that operation of the tank T-200 and T-300 vent fans will not be controlled by the PLC, as the fans are on a dedicated circuit and will be operational unless the entire system loses power or a fan malfunctions.

In addition to the vacuum switches indicating operation of tank T-200 and T-300 vent fans, the exhaust fan starter is controlled by the PLC. This allows operators to control the operation of the exhaust fan to evacuate any hazardous gases inside the system enclosure in the event that the system is disabled. Additionally, the exhaust fans are programmed to operate if either of the set points for H_2S or VOCs is reached to evacuate the system enclosure.

The equipment enclosure is equipped with a temperature transmitter, leak detection switch, atmospheric pressure transmitter, oxygen sensor, VOC sensor, hydrogen sulfide (H_2S) sensor, and lower explosive limit (LEL) sensor. The enclosure is also equipped with two warning lights mounted on the exterior of the enclosure to alert the operator if there is a critical alarm active, or if one of the atmospheric sensors is signaling a hazardous atmosphere inside the enclosure. The temperature transmitter monitors the temperature within the equipment enclosure and is programmed to alarm based on a low temperature set point. The leak detection switch is installed in the leak detection sump of the equipment enclosure and will shut down the entire system if activated. The atmospheric pressure transmitter (barometer) measures atmospheric pressure, which is used for calibration and set point determination of the system level transducers.

The oxygen sensor measures the oxygen concentration in the equipment enclosure and is programmed to alarm at a high concentration set point for early determination of an oxygen leak and to assess safe oxygen levels for System Operator breathing space and for equipment enclosure entry. In the event of high oxygen concentration, an alarm will be sent to the O&M team, and both the critical alarm and hazardous atmosphere indication lights will be illuminated. In the event that either light is illuminated, the

operator will stop work , discuss the issues with the O&M team, and follow SOP 21 to ensure a safe entry can be conducted.

An H_2S sensor will be installed in the system enclosure and connected to the existing PLC. The H_2S sensor will be programmed to provide real-time air monitoring via the system remote login. Additionally, in the event of elevated H_2S readings, the sensor is programmed to alarm to the PLC and OMM team. The H_2S sensor will be programmed to illuminate only the Hazardous Atmosphere Indication light.

A volatile organic compound (VOC) sensor will be installed in the system enclosure and connected to the existing PLC. The VOC sensor will be programmed to provide real-time air monitoring via the system remote login. Additionally, in the event of elevated VOC readings, the sensor is programmed to alarm to the PLC and OMM team. The VOC sensor will be programmed to illuminate only the Hazardous Atmosphere Indication light.

An LEL sensor will be installed in the system enclosure and connected to the existing PLC. The LEL sensor will be programmed to provide real-time air monitoring via the system remote login. Additionally, in the event of elevated LEL readings, the sensor is programmed to alarm to the PLC and OMM team, and also disable the entire system with the exception of the Tank T-200 and T-300 vent fans. Since the LEL sensor will be programmed to disable the entire system in the event elevated oxygen concentrations, both the Critical Alarm Indication Light and the Hazardous Atmosphere Indication lights will be illuminated.

2.4.3 Infiltration Trenches and Injection Wells

Each infiltration trench and injection well is equipped with a level transducer to shut down the entire system if a high-high level condition occurs in either or all of the injection wells and/or infiltration trenches.

3. System Startup and Shutdown Procedures

3.1 Pre-Startup Procedure

The activities to be performed prior to system startup are described in SOP 2: System Pre-Startup, which is provided in Appendix C. System pre-startup procedures will be performed prior to initial system startup or prior to a startup of the system after a prolonged shutdown.

3.2 Initial System Startup Procedure

The procedure to be followed for the initial system startup or for startup of the system after a prolonged shutdown is described in SOP 3: Initial System Startup, which is provided in Appendix C.

3.3 Routine System Startup Procedure

The procedure for routine system startup (startups after temporary system shutdowns) is described in SOP 4: Routine System Startup, which is provided in Appendix C. Routine system startup procedures assume that pre-startup and initial system startup requirements have been completed or are still in place.

3.4 System Shutdown Procedures

The procedure for system shutdown is described in SOP 5: System Shutdown, which is provided in Appendix C.

4. System Operation, Maintenance, and Monitoring

This section describes activities required for proper OMM of the system. OMM activities will be performed in accordance with the HASP, which is discussed in Section 8, and with SOPs, which are provided in Appendix C.

4.1 System Operation

Operation of the system is designed to be fully automated with daily remote monitoring/ control requirements and routine weekly OMM visits to the site to perform monitoring/ inspection activities and maintenance activities as required. Separate non-routine site visits are anticipated as well for alarm response and/or to perform non-routine maintenance activities. A Project Contact List, including site contacts and system vendors, suppliers, and contractors is provided in Table 1.

4.1.1 Key Process Variables

Key process variables (KPVs) are established and monitored to verify that system operation is meeting the intended goals and remedial objectives of the system design. The KPVs for the system are:

- Influent flow rate from each extraction well (35 gallons per minute [gpm])
- Combined influent flow rate (70 gpm)
- Oxygen supply flow rate (70 scfh/1.2 standard cubic feet per minute)
- Targeted DO concentration in decant tank (30 milligrams per liter [mg/L], parts per million [ppm])
- Discharge flow rate to each infiltration trench (10 gpm)
- Discharge flow rate to each injection well (5 gpm)

The ratio between groundwater flow and oxygen required to be provided has been established as 1 scfh of oxygen per 1 gpm of groundwater. The 1:1 ratio is an approximation of the breakpoint where the gas/liquid transfer efficiency begins to level off at approximately 30 to 35 mg/L DO concentration.

The system has been sized to allow for 50 gpm from each extraction well (100 gpm combined flow) and 100 scfh of oxygen from the oxygen supply system. However, based on preliminary water yields from the system extraction wells, it is anticipated that the design flows stated above represent what the actual flows for the system will be to maintain steady state operation (limit pump cycling).

4.1.2 Site Access

Limited access to the property is from Railroad Avenue at the southeast corner of the site and over the Zinsser Bridge that crosses the railroad tracks. The Zinsser Bridge has fallen into disrepair and is no longer open to vehicular traffic. Vehicular traffic and equipment deliveries will be routed through the site security gate on River Avenue near the Hastings on Hudson Railroad Station. All ARCADIS personnel and contractors will be required to sign in at the gate upon entry and sign out when exiting each day.

Once through the security gate and signed in, contractors and visitors will be escorted by an ARCADIS representative and will follow a predetermined route designated by ARCADIS. Access agreements have been established with the property owners of the site (Uhlich Property and the Exxon Mobil Property).

The System Enclosure is surrounded by a 85’ x 35’ x 8’ high chain link fencing structure with 3 strands of barbed wire to prevent trespassing into and on top of the enclosure. A 12’ wide gate is installed on the southern end of the fence to provide operator and vehicular access near the solids settling tank. To provide additional security, four surveillance cameras are installed on a pole above the enclosure and provide real-time monitoring capability as well as recording approximately 10 days worth of video.

4.1.3 Permit to Work Form

A Permit to Work (PTW) must be completed by the System Operator or Engineer prior to performing any OMM procedures/activities at the site. All site visitors must sign the PTW, which serves a dual purpose:

- Administrative control to prevent unauthorized work
- Identify all precautions and restrictions necessary to do the work safely

A high-risk PTW must be issued for high-risk work, including but not limited to, excavation activities, electrical and/or hot work, or confined space entry. Copies of the PTW and the High-Risk PTW Form are provided in Appendix D.

4.1.4 Confined Space

All vaults and manholes for the system are considered permit-required confined spaces. Entry, when any body part breaks the plane of the man way, must comply with Occupational Safety and Health Administration (OSHA) regulations and high-risk PTW requirements. Under no condition is an individual to enter a vault or manhole without a

confined space entry permit, proper training, and equipment. SOP 9: Confined Space Entry is included in Appendix C.

4.1.5 Alarm Response

The OMM team is responsible for responding to all alarms associated with the system. As previously mentioned, system alarm conditions will be transmitted via text and email messages to the OMM team. If not on site during the alarm condition, members of the OMM team can remotely access the system controller, monitor and acknowledge alarms, and if needed can start or shut down the system. When remote alarm response is not practical or site conditions need to be verified prior to continuing system operations, the primary or secondary System Operator will be deployed to the site for confirmation. All system alarms will be tested a minimum of once per year.

4.1.6 Emergency Response

For medical emergencies that require the dispatch of an emergency medical team, 911 services can be used from a hard line phone or cell phone; however, if a cell phone is used, direct dialing of the police, fire department, or emergency medical services is understood to have the quickest response time. Direct contact emergency phone numbers are provided below:

Police……..914-478-2344

Fire Department……914-478-0261

Notify site security and OMM management as soon as possible following an emergency response call. A Prioritized Emergency Contact List is provided in Table 2.

4.2 System Maintenance

For proper operation of the system, both routine and non-routine maintenance activities must be conducted. An equipment list and manufacturer literature for all equipment, system pumps, and major instrumentation is provided in Appendix A.

SOP 6: Lock Out/Tag Out must be followed prior to performing any system maintenance. SOP 6 is included in Appendix C.

Prior to initiation of a maintenance activity, a job safety analysis (JSA) will be conducted to evaluate the potential hazards associated with the work to be done. JSAs will be generated by the System Operator and kept on record for future use.

Routine and non-routine maintenance activities for the site must be documented on the Weekly Maintenance Log, which is included in Appendix E. Notify OMM management personnel of any failure of or damage to major equipment.

The estimated duration for system operation is 3 to 5 years and it is anticipated that only minor repairs to system components will be needed during this time period. Preventative maintenance and monitoring/inspection results will indicate when components need to be repaired or replaced. Therefore, no equipment inventory will be kept on site. To track system component replacement and/or regularly defective equipment, an Equipment Replacement Tracking Log will be used. If it is determined that the defective nature of a particular system component is adversely affecting system operation uptime, options to keep it as a stocked item will be considered. A copy of the Equipment Replacement Tracking Log is provided in Appendix E.

Prior to a chemical being brought on site and used for any maintenance purposes, a Material Safety Data Sheet (MSDS) must be provided to the OMM team for review. MSDSs are to be kept in Appendix F of this OMM Manual.

4.2.1 Routine System Maintenance

The System Operator performs routine maintenance and upkeep on the system as required. System deficiencies observed during monitoring/inspection activities will be repaired immediately. System Operators will only self-perform the routine maintenance activities that they are qualified to perform. For routine maintenance tasks that require more in-depth knowledge or are recommended to be performed by an expert, a manufacturer representative or recommended qualified contractor will be deployed to the site to perform the maintenance.

Routine system maintenance includes, but is not limited to, the following activities:

- Maintaining grounds free from clutter and/or hazards
- Maintaining snow removal and upkeep of access roadways (as applicable) and/or walkways (as needed)
- Pump, instrumentation, and valve replacement (per manufacturer's recommendations)
- Pipe and pipe fitting repair/replacement
- Calibration/testing of permanent air monitoring transmitters and sensors

4.2.2 Non-Routine Maintenance

The System Operator performs non-routine maintenance and upkeep on the system as required. System deficiencies observed during monitoring/inspection activities will be repaired immediately. System Operators will only self-perform the non-routine maintenance activities that they are qualified to perform. For non-routine maintenance tasks that require more in-depth knowledge or are recommended to be performed by an expert, a manufacturer representative or recommended qualified contractor will be deployed to the site to perform the maintenance.

Non-routine system maintenance includes, but is not limited to, the following activities:

- Well purging/development/cleaning
- Electrical/system controller component repair/replacement
- Major system component repair (per manufacturer's recommendations)
- Pipe cleaning/flushing
- Infiltration trench cleaning/flushing

The solids settling tank is included in the system design to assist with the removal of precipitated iron and other suspended solids to reduce precipitated solids accumulation in the downstream discharge piping, infiltration trenches, and injection wells. As further discussed in Section 4.2.3, the solids settling tank will be monitored for solids accumulation and the solids will be removed periodically as needed to limit the extent of solids that may carry over into the decant tank and ultimately to the discharge piping, infiltration trenches, and injection wells.

The system design includes discharge piping clean-out access points and pipe clean-out isolation valves in each of the injection well vaults and infiltration trench manholes. If significant fouling of the discharge piping is observed (increased discharge pressures) through routine monitoring, the discharge piping can be cleaned and flushed, and through the use of the pipe clean-out isolation valves, the pipe flushing water/solids flow can be diverted from the injection wells and infiltration trenches to a mobile purge water tank. The mobile purge water tank will be positioned near each vault/manhole with hose connections.

The system design also includes clean-out piping at the ends of each infiltration trench. If significant fouling of the infiltration trenches leading to diminished infiltration rates is observed, cleaning of the infiltration trenches can be performed using a cleaning agent/anti-biofouling agent, potable water flush, and/or mechanical cleaning methods to promote acceptable infiltration rates.

Injection well (and extraction well) maintenance will be performed as needed. Maintenance that may be required includes, but is not limited to, solids removal/purging, well redevelopment, and screen cleaning.

It is anticipated that the use of select concentration hydrogen peroxide (typically 3%) as an anti-biofouling agent for the system discharge components is opportunistic because it offers an accepted and proven practice for anti-biofouling. In addition, the use of select concentration hydrogen peroxide has proven to diminish the concentration of chlorobenzene in groundwater.

If maintenance to the system discharge components is needed, procedures for these activities will be developed prior to starting such work.

4.2.3 Preventative Maintenance

Several system components require regular preventative maintenance to promote continuous system operation. System components that require preventative maintenance, the tasks to be performed, and the frequency at which they will be performed are identified below. A copy of the Preventative Maintenance Tracking Log is included in Table 3.

4.2.3.1 Package Air Compressor System

The package air compressor system preventative maintenance will be performed semiannually. Preventative maintenance that can be performed by the System Operator (e.g., filter change out, oil reservoir filling) will be performed in accordance with the package air compressor system operation and maintenance manual. For maintenance tasks that

require more in-depth knowledge or are recommended to be performed by an expert, a manufacturer representative or recommended qualified contractor will be deployed to the site to perform the maintenance.

4.2.3.2 Oxygen Generator/Receiving Tank

The oxygen generator/receiving tank preventative maintenance will be performed semiannually. Preventative maintenance that can be performed by the System Operator will be performed in accordance with the oxygen generator/receiving tank operation and maintenance manual. For maintenance tasks that require more in-depth knowledge or are recommended to be performed by an expert, a manufacturer representative or recommended qualified contractor will be deployed to the site to perform the maintenance.

4.2.3.3 Flow Totalizer Cleaning

The discharge manifold flow totalizers will be removed, inspected, and cleaned on a biennial basis or as needed. Defective/corroded/fouled internal parts will be replaced (if possible) as needed.

4.2.3.4 Solids Removal

Solids accumulation in the system equalization tank, solids settling tank, and decant tank will be monitored weekly. Solids will be removed from the tanks as needed. It is not anticipated that solids accumulation will be a significant issue in the equalization tank. As designed, the solids settling tank will accumulate solids; it is crucial that the solids are removed prior to solids carry over into the decant tank.

4.2.3.5 Instrumentation Calibration/Replacement

System instrumentation that requires calibration or replacement includes:

- Oxygen sensor, which must be calibrated annually
- H_2S sensor, which must be tested every quarter and calibrated annually or more frequently based on measured span drift and manufacturers recommendations
- VOC sensor, which must be tested every quarter and calibrated annually or more frequently based on measured span drift and manufacturers recommendations
- LEL sensor, which must be tested every quarter and calibrated annually or more frequently based on measured span drift and manufacturers recommendations
- DO probe, which must be replaced every 2 years

Calibration and replacement activities will be performed in accordance with manufacturer specifications.

4.3 System Monitoring

The system operation is monitored to meet the following objectives:

- Verify normal operation within design specifications
- Verify that system components are in good condition and operating normally
- Obtain data that will be used if modifications to the system are required to make operation more efficient
- Obtain data for reporting purposes

Operating personnel are required to perform system monitoring tasks on a specified periodic basis. These tasks must be logged into the specified OMM Logs, which are included in Appendix E. The OMM Logs must be completed as directed below and an electronic scan of the completed logs will be provided to the OMM Engineer by the end of the following week. Any system defects found during monitoring/inspection activities will be repaired immediately in accordance with the requirements described in Section 4.2.

Routine sampling and analysis activities to be conducted during system operation are discussed in Section 6. Waste management activities to be conducted, including disposal, are discussed in Section 7.

4.3.1 Daily Monitoring

Daily system monitoring will consist of remote monitoring and data review and interpretation. Daily system monitoring will be performed by the System Operator or an OMM Engineer and required data and conditions will be recorded in a Remote Monitoring Daily Log (Appendix E).

4.3.2 Weekly Monitoring

Weekly monitoring will be performed by the primary or secondary System Operator during weekly visits to the site. Required data and inspection results will be recorded in the Weekly Monitoring Logs (Appendix E). The weekly site visit will include a download of data from the system controller to be subsequently used for more in-depth system performance evaluation and for reporting purposes. Weekly site visits and therefore, weekly monitoring

requirements, may be changed to biweekly after it has been established that weekly visits are not required based on effective automated system operation and remote monitoring/ control.

4.3.3 Annual Monitoring

OMM personnel will conduct annual system alarm testing to confirm that the system alarms are functioning as programmed and that set points are positioned as needed. A copy of the Annual Alarm Testing Log is provided in Appendix E; SOP 7: Alarm Testing is provided in Appendix C.

The OMM Manual will be reviewed and updated annually, if necessary, to validate that the most current operational practices are included in the manual.

4.3.4 Groundwater Monitoring Considerations

A groundwater monitoring plan has been developed for the site and is included in this section for reference and provided under separate cover. Groundwater monitoring results will be used to evaluate the effectiveness of the system and to determine when operation of the system can be discontinued to evaluate the transition to an MNA approach for the site. The system shutdown criteria are included in the groundwater monitoring plan for the site.

Purge water generated during groundwater sampling can be transferred into the system for return back to the subsurface. If needed, the purge water will be transferred into the solids settling tank. However, monitoring well development water is prohibited from being transferred into the system and must be containerized and shipped off site for disposal.

5. Record Keeping

System OMM records will be maintained as described in this section. All OMM and sampling documentation will be maintained in separate files (hard copy and/or electronic, preferably both) and segregated by calendar weeks within the equipment enclosure. In addition to the system OMM records described below, the following documents must be available on site:

- System OMM Manual
- HASP
- Manufacturer OMM manuals for system equipment

5.1 System Data

System data downloaded from the system controller during the weekly visit will be maintained by the OMM Engineer. The System Operator will send the OMM Engineer the OMM data before the end of the following week. If the data is too large to send via email, the data will be saved to the ARCADIS share drive, if possible, followed by email notification of its location, or the data can be saved to a removable drive and mailed to the OMM Engineer.

5.2 Operations, Maintenance, and Monitoring Logs

Completed system OMM logs will be maintained in chronological order in a file folder on site. The completed OMM logs will be electronically scanned and provided to the OMM Engineer by the end of the following week. The System Operator is responsible for maintaining documentation (field log book) of system shutdowns and restarts, site activities, sampling events, site visitors, waste disposal documentation, and other pertinent information.

5.3 Sampling Data

Preliminary analytical results and final analytical data packages will be sent to the OMM Engineer for evaluation and retention in a sample results file. Quality assurance/quality control and data validation of these samples is not required at this time. To the extent practicable, sample results will be segregated by sample location (i.e., system influent [EW-1 and EW-2] and system effluent). The sampling program associated with performance monitoring of the system is described in Section 6.

5.4 Operator Deliverables

To meet reporting requirements for the performance and operation of the system, the System Operator is tasked with providing the following information to the OMM Engineer on a weekly basis:

- Copies of field log book entries
- Copies of completed OMM logs
- Copy of the system data
- Copies of waste transportation and disposal documentation
- Other pertinent information

6. Sampling and Analysis

This section describes the general procedures for sampling, handling, packing, and shipping samples collected from the system for subsequent laboratory analysis.

6.1 Baseline Sampling

During initial system startup and shake down, baseline influent samples will be collected from the system to evaluate the initial influent concentrations of DO, target compound list (TCL) volatile organic compounds (VOCs), TDSs, total suspended solids (TSSs), and dissolved iron (ferrous iron).

6.2 Routine Sampling

Routine sampling associated with system operation is primarily focused on performance monitoring and understanding the characteristics of the influent and effluent for system fine tuning. Routine sampling will be performed quarterly for the first year of operation. After the system has been fine-tuned, based on consistent influent characteristics, the frequency for routine sampling may be changed to semiannual.

Routine samples will be collected from each extraction well influent line and from the injection pump discharge piping (system effluent). Influent and effluent samples will be analyzed for DO, TCL VOCs, TDSs, TSSs, and iron (dissolved) as well as any other parameter deemed necessary during future operations. Influent DO concentrations will be measured in the field. Using a continuous reading probe and meter, DO will be measured continuously from the contents of the decant tank. The targeted DO concentration in the decant tank is 30 mg/L, ppm. System sampling schedule and requirements are provided in Table 4.

6.3 Non-Routine Sampling and Analysis (Sample Collection by Others)

If a regulatory agency or other third party is granted approval to collect a sample from the system, the System Operator will accompany the agency or third party representative and collect the appropriate split samples. Additionally, the System Operator will request that a copy of the analytical results (including appropriate quality assurance documentation as applicable) be forwarded to the System Operator and OMM Engineer for review and comparison.

6.4 Waste Characterization

Solids that accumulate in the process tanks will be sampled and analyzed for waste characterization/profiling prior to disposal.

6.5 Laboratory Requirements

Analyses of all samples collected from the system will be conducted by TestAmerica Laboratories, Inc. (TestAmerica) unless otherwise approved by the OMM Engineer. TestAmerica, a laboratory certified by the New York State Department of Health, will provide off-site analytical services for system water samples. Contact information for TestAmerica is provided below:

John Schove, Project Manager

10 Hazelwood Drive
Amherst, NY 14228
Tel 716.504.9838 | Fax 716.691.7991

Sample containers, chain of custody forms, and other needed items can be requested from TestAmerica. Basic requirements for completing the chain of custody will be implemented. All sample bottles must be completely filled with little to no headspace. SOP 8: Chain of Custody, Handling, Packing, and Shipping is provided in Appendix C.

7. Waste Management

The primary waste that will be generated by system operation will be the solids that accumulate in the process tanks. The solids will be removed from the tanks as needed. The solids that accumulate in the tanks will be sampled for waste characterization and profiling for disposal purposes prior to deploying a contractor to the site to remove the solids from the tanks.

Personal protective equipment (PPE) used during OMM will be taken with operator and disposed of as general refuse.

It is assumed that little to no waste storage will be required at the site; however, if small amounts of waste must be stored, all state, local, and CEMC guidelines will be met. All waste that is shipped from the site will be disposed of at a CEMC-approved waste disposal facility. The OMM Engineer will identify waste haulers and vacuum truck service providers on a case by case basis.

8. Health and Safety

8.1 Site-Specific Health and Safety Plan

All activities associated with system OMM will be conducted in accordance with the HASP. OMM personnel will review and sign the HASP prior to starting work at the site. A copy of the HASP will be kept on site in the equipment enclosure at all times, in an accessible location.

8.2 Specific Activities

At a minimum, the HASP addresses the following health and safety requirements:

- Key health and safety personnel and their roles and responsibilities
- Project hazards and control measures
- General safety practices
- Personnel training requirements
- Emergency response/contingency plan
- Task/operation health and safety risk analysis
- Air monitoring
- Site-specific lock out/tag out procedures
- PPE
- PPE equipment reassessment program
- Medical surveillance
- Benzene awareness

The HASP has been distributed to the team and a copy is located at the site. JSAs prepared for routine or non-routine tasks are maintained as part of the HASP.

9. Management of Change

The purpose of the MOC procedure is to reduce the potential for safety, environmental, health, reliability, or efficiency incidents associated with system OMM activities. This process is designed to ensure that all change events are systematically reviewed, communicated, approved, and documented. A copy of the CEMC MOC OE Required Process along with the CEMC MOC Report Form, are included as Appendix G. Completed MOC documents will be collected by the OMM Engineer and included in Appendix H of this OMM Manual.

Changes to equipment, raw materials, and processing conditions resulting from the MOC procedure must be documented and/or updated in this OMM Manual using the OMM Manual MOC form (Appendix I). In addition to changes to the OMM Manual resulting from MOC procedure, the OMM Manual must be reviewed annually to validate that the most current operational practices are included in the manual. The OMM Manual MOC form will be completed whenever a change is made to the OMM Manual and will accompany the pages, tables, figures, and/or appendices affected by the change when submitted to the OMM team for inclusion in their individual OMM Manuals. The form will include relevant information to guide individual team members on where to insert the updated portions of the OMM Manual, a brief description of what prompted the change, and the date on which the change was implemented. Any orientation or training for the modified system or procedure must be completed prior to startup.

10. Training and Awareness

All personnel are required to be adequately trained prior to operating the system. Training requirements are listed below:

- 40 Hour Hazwoper training in accordance with OSHA 20 CFR 1910.120
- 8 Hour Refresher Course in accordance with OSHA 20 CFR 1910.120
- Site-Specific Health and Safety Training
- Confined Space Entry Training
- National Fire Protection Association 70E: Standard for Electrical Safety in the Workplace
- 8 Hour Initial Loss Prevention System (LPS) Training and Refreshers
- Site Awareness Training
- Chevron 101
- Smith System Defensive Driver Training

Documentation of completed training is required and copies of the training certificates will be maintained in Appendix J of this OMM Manual.

All training required for System Operators will be completed and renewed as needed. All personnel performing work on site will be required to have received LPS or similar CEMC-approved behavioral-based health and safety program training prior to performing any work on site. In addition to behavioral-based health and safety program training, all contractors will be required to complete the Chevron 101 Training for Subcontractors as well as receive a site orientation briefing. ARCADIS will schedule and coordinate with the subcontractors to schedule the Chevron 101 Training for Subcontractors class prior to initiating OMM activities.

11. Compliance Requirements

The system operates under a United States Environmental Protection Agency Class V Injection Well Permit. A copy of this permit is included as Appendix K.

ARCADIS

Tables

Table 1
Project Contacts

Groundwater Remediation System
Former Tappan Terminal Site
Hastings on Hudson, New York

Organization	Contact	Role	Phone	Cell	Email	Address
RECON	Daniel Derefinko	Mechanical Contractor	281-664-1127	281-250-5202	dan.derefinko@reconservices.com	9977 W. Sam Houston Parkway North, Suite 100 Houston, Texas 77064-7509
D & M Electric	Doug Winston	Electrical Contractor	914-345-2102	914-447-1560	doug@dmelectrical.com	90 South Central Ave, Elmsford, NY 10523
Parratt-Wolff	Sean Pepling	Well Driller/Maintenance Contractor	800-782-7260 315-437-1429		SPepling@pwinc.com	PO Box 56, 5879 Fisher Road East Syracuse, NY 13057
Product Level Control	Bruce Grannes Chuck Cernoch	Remediation System Vendor	952-707-9101 x 27 952-707-9101		bgrannes@productlevel.com ChuckC@productlevel.com	11929 Portland Avenue South Burnsville, MN 55337
Eco-Rental Solutions		Air Monitoring Equipment Vendor	855-ECO-RENT			75 Rockwood St. Rochester, NY 14610
Pine Environmental Services, Inc.		Air Monitoring Equipment Vendor	1-800-301-9663			P.O. Box 943 Hightstown, NJ 08520
Sean's Pool Water		Potable Water Delivery	203-536-2405			P.O. Box 61 Bethlehem, CT 06751
ISCO Industries, LLC	Trip Weck	HDPE Pipe and Manhole Vendor	800-345-4726 x 6619		Trip.Weck@isco-pipe.com	926 Baxter Avenue Box 4545 Louisville, Kentucky 40204
Pumps of Oklahoma	Dick Greenly	Pump Vendor	405-235-2695		RCGreenly@pumpsofoklahoma.com	1220 N.W. 3rd Street P.O. Box 1124 Oklahoma City, OK 73101
FCx Performance	Brian Koroll	Instrumentation Vendor	262-512-4000 x 24227	763-458-8448	bkoroll@FCxPerformance.com	N106 W13131 Bradley Way Germantown, WI 53022
Hach Company	Darin Lienau	Dissolved Oxygen Controller/Probe Vendor	800-227-4224 x 6261		dlienau@hach.com	2207 Collections Center Drive Chicago, IL 60693
RAECO-LIC, LLC	Mary Beth Castle	Oxygen Sensor Vendor	630-757-1779 800-852-9795		marybeth@raeco.com	135 Bernice Dr, Bensenville IL 60106
NorthEastern Reliability/Koester	Jillian Kundin	Solids Settling Tank Vendor		585-507-9457	easternreliability2@gmail.com	2230 Penfield Road Penfield, NY 14526
Maass Midwest Manufacturing Inc.		Pitless Adaptor Vendor	847-669-5135			P.O. Box 547 11283 Dundee Road Huntley, Illinois 60142-0547
ConEd	Barry Decker	Electric Utility		914-925-6129	Deckerb@coned.com	
ARCADIS	Alan Gillespie	Construction Supervisor	859-253-9036 x 12	859-333-7702	alan.gillespie@arcadis-us.com	2464 Fortune Dr. Suite 170 Lexington, KY 40509
ARCADIS	Greg Mason	H&S Coordinator	859-253-9036 x 14	859-806-0746	greg.mason@arcadis-us.com	2464 Fortune Dr. Suite 170 Lexington, KY 40509

Table 1
Project Contacts

Groundwater Remediation System
Former Tappan Terminal Site
Hastings on Hudson, New York

Organization	Contact	Role	Phone	Cell	Email	Address
ARCADIS	Allen Sisson	H&S Supervisor	859-253-9036 x 47	859-327-1650	allen.sisson@arcadis-us.com	2464 Fortune Dr. Suite 170 Lexington, KY 40509
ARCADIS	Bill McCune	Project Manager	315-671-9172	315-420-4348	william.mccune@arcadis-us.com	6723 Towpath Road, P.O. Box 66
ARCADIS	JoAnn Robertson	Task Manager	315-671-9143		joann.robertson@arcadis-us.com	6723 Towpath Road, P.O. Box 66
ARCADIS	Andy Korik	Task Manager	315-671-9323		andrew.korik@arcadis-us.com	6723 Towpath Road, P.O. Box 66
ARCADIS	Anthony Roseamelia	OMM Engineer	315-671-9449	315-720-0226	anthony.roseamelia@arcadis-us.com	6723 Towpath Road, P.O. Box 66
ARCADIS	Dan Moran	OMM Engineer	315-671-9278	315-525-5927	daniel.moran@arcadis-us.com	6723 Towpath Road, P.O. Box 66
Chevron Environmental Management Company	Mark Stella	Client Project Manager	713-432-2643	281-382-0281	MarkStella@chevron.com	4800 Fournace Place E 530A Bellaire, TX 77401
Security Contractor	Dennis Kivel	Security Chief	914-591-7365		denniskivel@yahoo.com	
Village of Hastings on Hudson	Deven Sharma Deputy Charles Minozzi	Building Inspector	914-478-3400 x 613		DSharma@hastingsgov.org	
Village of Hastings on Hudson	Dave Bloomer	Police Chief	914-478-2344		DBloomer@Hastingsgov.org	
Village of Hastings on Hudson	Francis Frobel	Village Manager				
NYSDEC	Bill Ports Dave Herman	NYSDEC Project Manager	518-402-9672		wfports@gw.dec.state.ny.us daherman@gw.dec.state.ny.us	625 Broadway Albany, NY 12233-7014
Haley & Aldrich	Keith Aragona	ARCO (BP) Consultant	734-887-4362		karagona@HaleyAldrich.com	3840 Packard Road, Suite 130 Ann Arbor, MI 48108-2280
ExxonMobil Environmental Service Company	Steve Trifiletti	ExxonMobil Project Manager	718-404-0652		steve.p.trifiletti@exxonmobil.com	38 Varick Street Brooklyn, New York 11222
Roux Associates	Tracy Bispham	ExxonMobil Oversight Consultant	631-232-2600	631-445-4558	tbispham@rouxinc.com	209 Shafter St Islandia, NY 11749
Woodard & Curran	Anne Proctor	ExxonMobil Consultant	203-271-0379		aproctor@woodardcurran.com	1520 Highland Avenue Cheshire, CT 06410

Table 2
Prioritized Emergency Contact List

Groundwater Remediation System
Former Tappan Terminal Site
Hastings on Hudson, New York

Organization	Contact	Phone	Cell	Email
ARCADIS	Anthony Roseamelia	315-671-9449	315-720-0226	anthony.roseamelia@arcadis-us.com
ARCADIS	Dan Moran	315-671-9278	315-525-5927	daniel.moran@arcadis-us.com
ARCADIS	Bill McCune	315-671-9172	315-420-4348	william.mccune@arcadis-us.com
ARCADIS	JoAnn	315-671-9143		joann.robertson@arcadis-us.com
ARCADIS	Andy Korik	315-671-9323		andrew.korik@arcadis-us.com
Chevron Environmental Management Company	Mark Stella	713-432-2643	281-382-0281	MarkStella@chevron.com

Note:
In the event of an alarm notification received by system operation personnel or any emergency situation associated with the system, the system operation personnel will make notification in accordance with the prioritized call list provided above. NOTE: If Anthony Roseamelia is not available, then Dan Moran will be called, and so on down the list until direct contact is made.

Table 3
Preventative Maintenance Tracking Log

Groundwater Remediation System
Former Tappan Terminal Site
Hastings on Hudson, New York

Item Description	Frequency	Initial	Date Performed								
Package Air Compressor System Preventative Maintenance	2/year	6/1/2013									
Oxygen Generator/Receiving Tank Preventative Maintenance	2/year	6/1/2013									
Discharge Manifold Flow Totalizer Cleaning	Every 2 years	1/15/2015									
T-200 Solids Removal	As needed										
T-400 Solids Removal	As needed										
T-300 Solids Removal	As needed										
Oxygen Sensor Calibration	1/year	1/15/2014									
Dissolved Oxygen Probe Replacement	Every 2 years	1/15/2015									
Hydrogen Sulfide Sensor Testing/Calibration	1/Quarter	6/1/2013									
Lower Explosive Limit Sensor Testing/Calibration	1/Quarter	6/1/2013									
Volatile Organic Compound Sensor Testing/Calibration	1/Quarter	6/1/2013									

Table 4
System Sampling Schedule and Requirements

Groundwater Remediation System
Former Tappan Terminal Site
Hastings on Hudson, New York

Location	Sample ID	No. of Samples	Frequency	Analyses	Container Type and Quantity	Preservative	Holding Time
EW-1 Sample Tap	EW-1 Influent	1	Quarterly/ Semiannually[5]	6010B[1] 6010B[1] TCL-8260B[2] 2540C[3] 2540D[3] DO (field measure)[4]	(1) 250 mL polyethylene (1) 250 mL polyethylene (3) 40 mL glass voa vials (1) 500 mL polyethylene (1) 500 mL polyethylene NA	HNO_3, Cool 4°C Cool 4°C HCl, Cool 4°C Cool 4°C Cool 4°C NA	28 days 28 days 14 days 7 days 7 days NA
EW-2 Sample Tap	EW-2 Influent	1					
P-300 Discharge Piping	System Effluent	1					

Notes:
DO = dissolved oxygen
HCl = hydrochloric acid
HNO_3 = nitric acid
L = liter
mL = milliliter
NA = not applicable
TCL = target compound list
°C = degrees Celsius
1. Analyses for 6010B include total and dissolved metals (iron, calcium, and magnesium).
2. Analyses for TCL-8260B include volatile organic compounds.
3. Analyses for 2540C/2540D include total dissolved solids and total suspended solids, respectively.
4. To be measured in the field and recorded on the chain of custody.
5. Routine sampling will be performed quarterly for the first year of operation. After the system has been fine-tuned, the frequency for routine sampling may be changed to semiannually.

Table 5
Critical Alarm and Setpoints
Operations, Maintenance and Monitoring Manual
Former Tappan Terminal
Hastings on Hudson, New York

Alarm	Corresponding Signal	Equipment / Instrument	Setpoint	Normal Operating Range	Maintenance Triggers	Critical Alarm Response
AAH-800	High Oxygen Concentration	AE-800	23.50	19.5-23.5	Alarm on PLC	Enable EF-1, Enable Hazardous Atmosphere Light, Enable Critical Alarm Light
AAH-801	High Hydrogen Sulfide Concentration	AE-801	0.5 ppm	< 0.5 ppm	Alarm on PLC	Enable EF-1, Enable Hazardous Atmosphere Light
AAH-802	High Volatile Organic Compound Concentration	AE-802	0.5 ppm	< 0.5 ppm	Alarm on PLC	Enable EF-1, Enable Hazardous Atmosphere Light
AAH-803	High Lower Explosive Limit Concentration	AE-803	5%	<5%	Alarm on PLC	Enable EF-1, Enable Hazardous Atmosphere Light, Enable Critical Alarm Light
AAHH-803	High High Lower Explosive Limit Concentration	AE-803	10%	<5%	Alarm on PLC	Disable P-100, Disable P-110, Close SV-900, Close XCV-200, Disable P-200, Disable P-300, Enable EF-1, Enable Hazardous Atmosphere Light, Enable Critical Alarm Light
VSL-200	Low Vacuum Vent Fan T-200	VI-200	Variable - Set and verified operation at startup and during annual alarm testing.	Variable - Set and verified operation at startup and during annual alarm testing.	Alarm on PLC	Disable P-100, Disable P-110, Close SV-900, Close XCV-200, Disable P-200, Disable P-300, Enable EF-1, Enable Critical Alarm Light
VSL-300	Low Vacuum Vent Fan T-300	VI-300	Variable - Set and verified operation at startup and during annual alarm testing.	Variable - Set and verified operation at startup and during annual alarm testing.	Alarm on PLC	Disable P-100, Disable P-110, Close SV-900, Close XCV-200, Disable P-200, Disable P-300, Enable EF-1, Enable Critical Alarm Light

ARCADIS

Figures

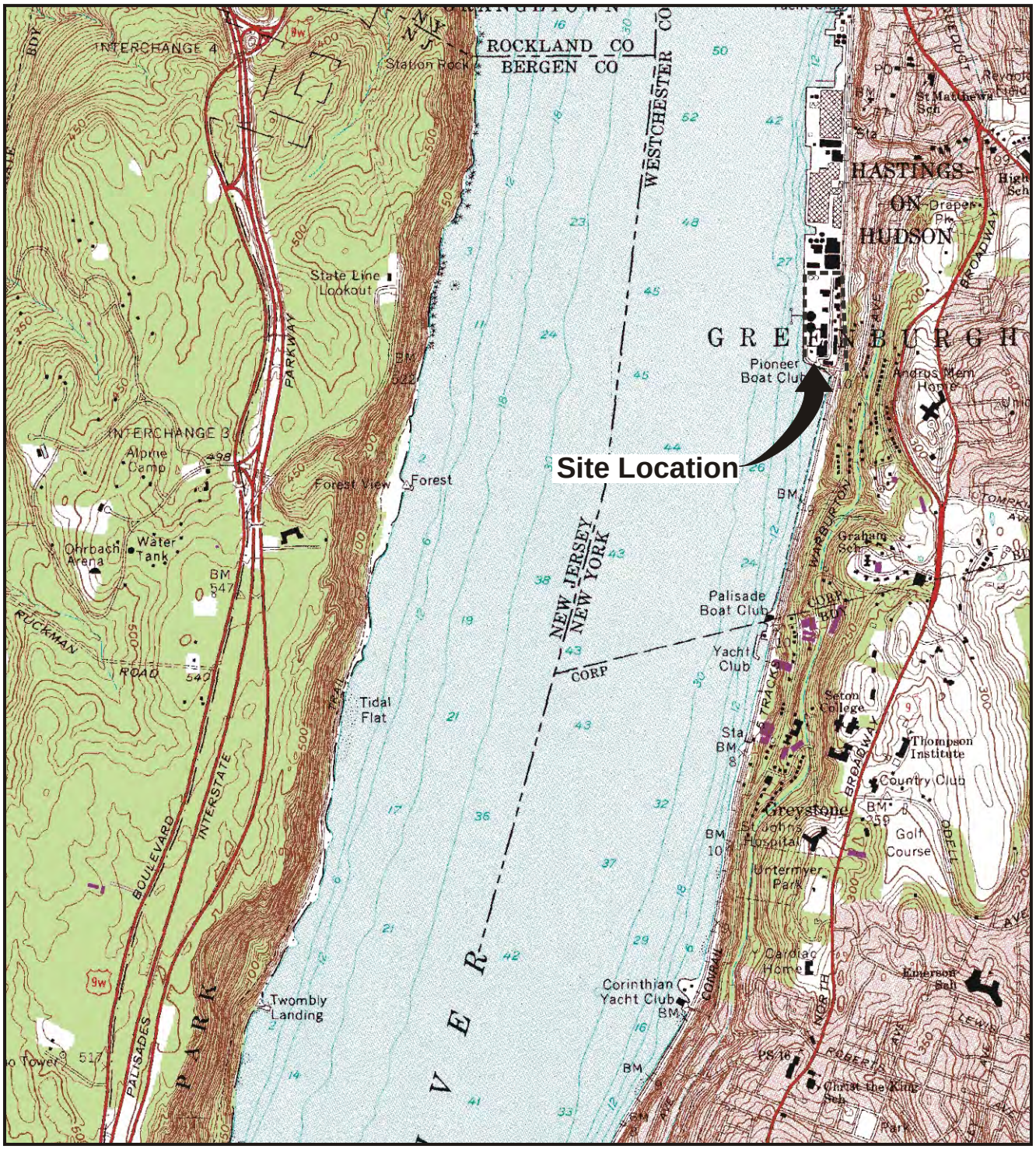

REFERENCE: BASE MAP USGS 7.5 MIN. QUAD., YONKERS, N.Y. - N.J., 1966, PHOTOREVISED 1979.

2000' 0 2000'

Approximate Scale: 1" = 2000'

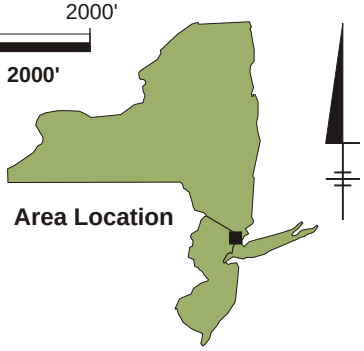

FORMER TAPPAN TERMINAL SITE
HASTINGS-ON-HUDSON, NEW YORK

GROUNDWATER REMEDIATION SYSTEM

SITE LOCATION MAP

ARCADIS

FIGURE
1

10/08/2010 SYRACUSE, NY-ENV/CAD-DHOWES
B0046918/0000/00001/CDR/46918N01.CDR

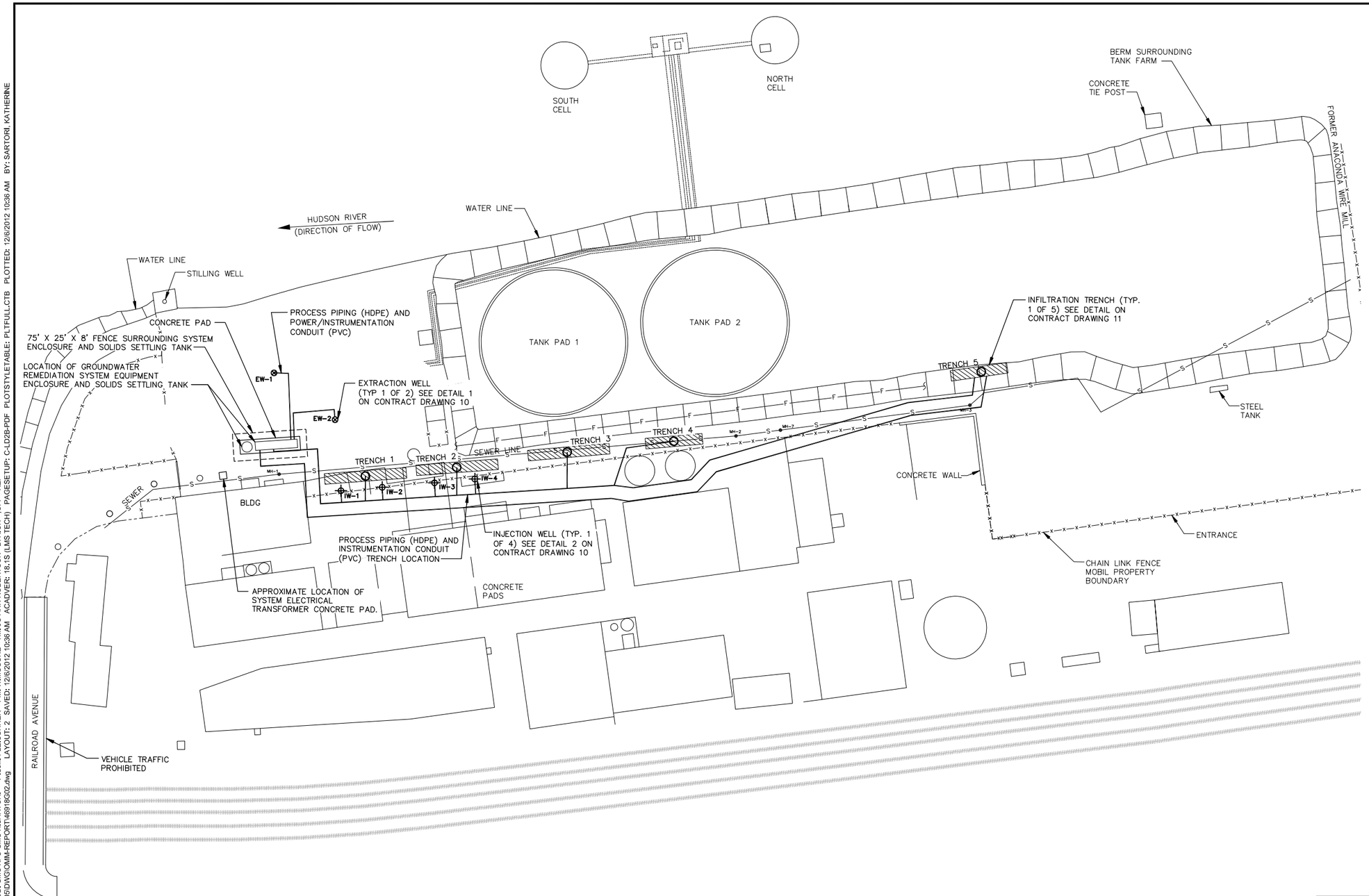

LEGEND:

- MH-7 ● SANITARY SEWER MANHOLE
- —S— SANITARY SEWER
- APPROXIMATE LOCATION OF INFILTRATION TRENCH
- IW-1 INJECTION WELL
- EW-1 EXTRACTION WELL
- —x— EXISTING FENCE
- —F— APPROXIMATE LOCATION OF EXISTING ABANDONED FIRE WATER LINE

NOTES:

1. BASEMAP PROVIDED BY WOODARD & CURRAN, FIGURE 1, TITLED "GROUNDWATER CONTOUR PLAN", DATED JAN 2002.

0 50' 100'
GRAPHIC SCALE

FORMER TAPPAN TERMINAL SITE
HASTINGS ON HUDSON, NEW YORK
GROUNDWATER REMEDIATION SYSTEM

SITE PLAN

ARCADIS

FIGURE
2

CITY: SYRACUSE, NY DIV/GROUP:ENV/CADD DB: GMS KFS GMS K.SARTORI PIC:M. FLEISCHNER PM: W.MCCUNE TM: JO ANN ROBERTSON LYR:ON=*;OFF=*REF*
G:\ENVCAD\SYRACUSE\ACT\B0046918\0001\00005\DWG\MM-REPORT\46918G02.dwg LAYOUT: 2 SAVED: 12/6/2012 10:36 AM ACADVER: 18.1S (LMS TECH) PAGESETUP: C-LD2B-PDF PLOTSTYLETABLE: PLTFULL.CTB PLOTTED: 12/6/2012 10:36 AM BY: SARTORI, KATHERINE
XREFS: 46918X01 46918X00 IMAGES: PROJECTNAME: ---

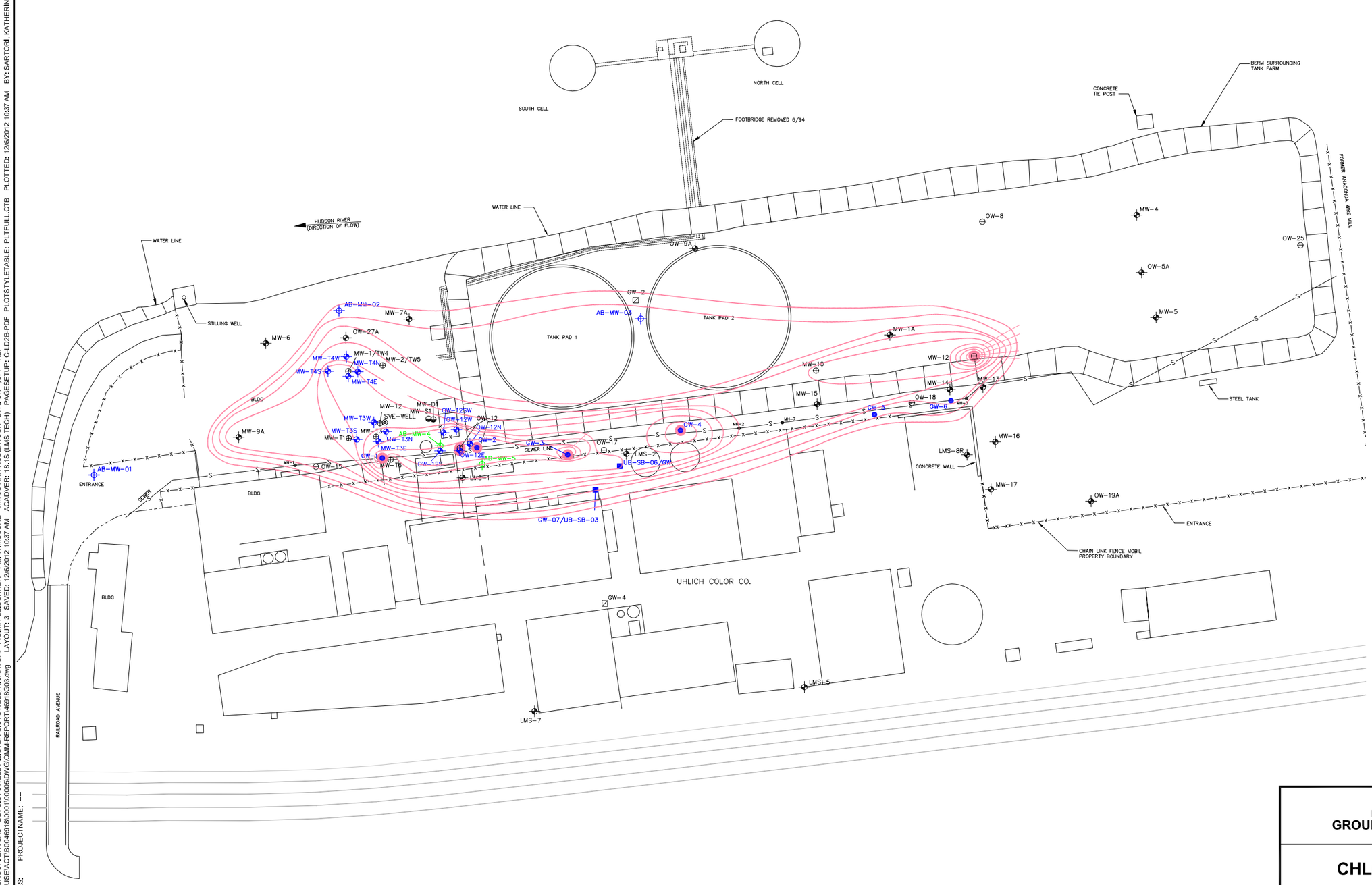

LEGEND:

- PILOT TEST MONITORING WELL (INSTALLED BY ARCADIS)
- MONITORING WELL
- SOIL BORING WITH GROUNDWATER COLLECTED SAMPLES
- SUPPLEMENTAL SOIL BORING WITH GROUNDWATER COLLECTED SAMPLES
- DNAPL MONITORING WELL (INSTALLED BY ARCADIS)
- MW-10 — 4-INCH-DIAMETER NEW MONITOR WELL
- MW-6 — 4-INCH-DIAMETER MONITORING WELL
- OW-1 — 2-INCH-DIAMETER OBSERVATION WELL
- MW-D1 — 6-INCH-DIAMETER TEST WELL
- GW-4 — GROUNDWATER SAMPLE
- MH-7 — SANITARY SEWER MANHOLE
- SB-7 — SUBSURFACE SOIL BORING
- S — SANITARY SEWER
- CHLOROBENZENE ABOVE 5000 ug/L
- CHLOROBENZENE CONTOUR (BASED ON 2008 AND 2009 RESULTS ONLY) (CONCENTRATION IN ug/L)

NOTES:

1. BASEMAP PROVIDED BY WOODARD & CURRAN, FIGURE 1, TITLED "GROUNDWATER CONTOUR PLAN" DATED JAN 2002 AND REVISED BASED ON SURVEY COMPLETED BY ARCADIS IN 2008.

0 50' 100'
GRAPHIC SCALE

FORMER TAPPAN TERMINAL SITE
HASTINGS ON HUDSON, NEW YORK
GROUNDWATER REMEDIATION SYSTEM

CHLOROBENZENE HOTSPOT LOCATION MAP

ARCADIS

FIGURE
3

CITY: SYRACUSE GROUP: ENVCAD DB: G.STOWELL P.LISTER G.STOWELL, K.SARTORI PIC:M. FLEISCHNER PM: W.MCCUNE TM: JO ANN ROBERTSON LYR: ON=*;OFF=*REF
G:\ENVCAD\SYRACUSE\ACT\B0046918\0001\00005\DWG\OMM-REPORT\46918G03.dwg LAYOUT: 3 SAVED: 12/6/2012 10:37 AM ACADVER: 18.1S (LMS TECH) PAGESETUP: C-LD2B-PDF PLOTSTYLETABLE: PLTFULL.CTB PLOTTED: 12/6/2012 10:37 AM BY: SARTORI, KATHERINE
XREFS: 46918X01 46918X00 IMAGES: PROJECTNAME: ---

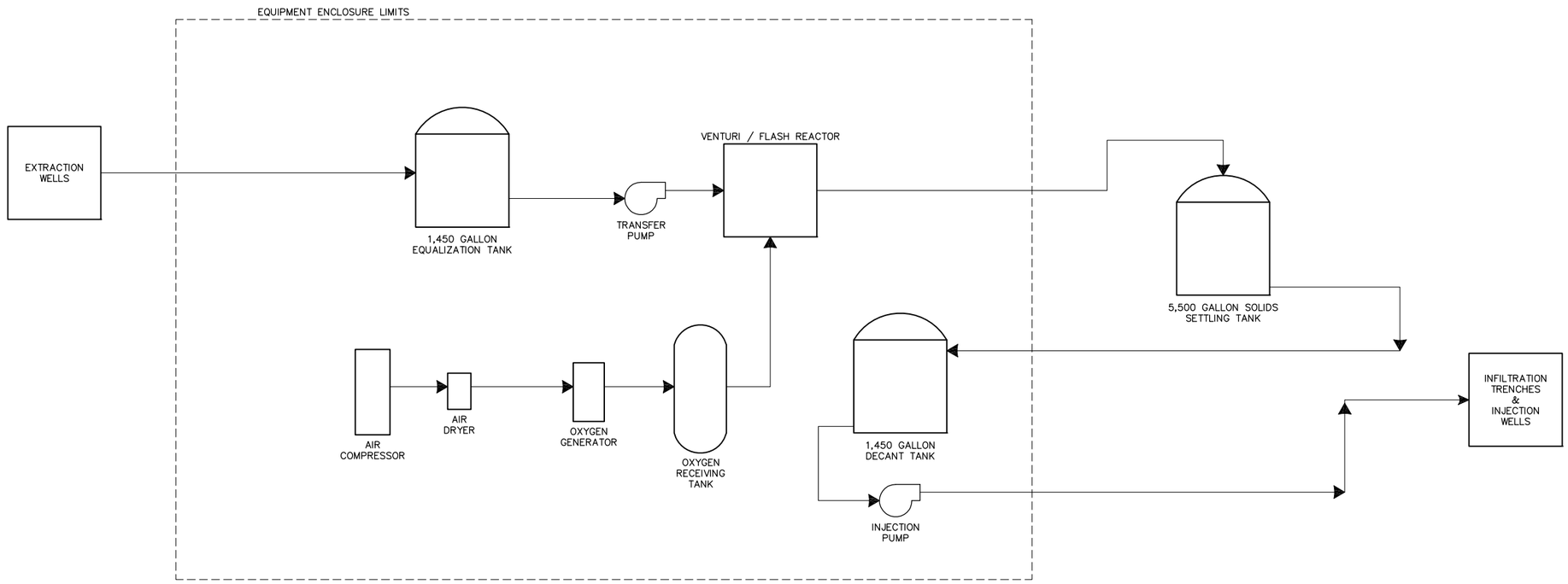

FORMER TAPPAN TERMINAL SITE
HASTINGS ON HUDSON, NEW YORK
GROUNDWATER REMEDIATION SYSTEM

PROCESS FLOW DIAGRAM

ARCADIS

FIGURE
4

CITY: SYRACUSE, NY DIV/GROUP:ENV/CADD DB: GMS KFS GMS K.SARTORI PIC:M. FLEISCHNER PM: W.MCCUNE TM: JO ANN ROBERTSON LYR:ON=*;OFF=*REF*
G:\ENVCAD\SYRACUSE\ACT\B0046918\0001\00005\DWG\OMM-REPORT\46918D04.dwg LAYOUT: 4 SAVED: 12/6/2012 10:34 AM ACADVER: 18.1S (LMS TECH) PAGESETUP: C-LD2B-PDF PLOTSTYLETABLE: PLTFULL.CTB PLOTTED: 12/6/2012 10:35 AM BY: SARTORI, KATHERINE
XREFS: IMAGES: PROJECTNAME: ---
46918X00

Appendix A

Equipment Literature

Groundwater Remediation System
Former Tappan Terminal Site
Hastings on Hudson, New York

Equipment List

ITEM	TAG	QTY	DESCRIPTION	Manufacturer	Vendor / Contact
1	P-100	1	**Extraction Well 1 Pump (P-100)** Model: Grundfos 60S20-4 Type: Submersible Well Pump Material: Teflon fillted pump, Viton Motor, and 30' Teflon Jacketed Cable. Pump Connection: 2" FNPT Power Requirements: 3-phase 460-VAC Motor- Franklin Pollution Recovery Model PRM2046033 Motor Size / FLA / TDH: 2-HP / ~14-amps / 60-ft Flow Requirement: 50 gpm	Grundfos	Pumps of Oklahoma
2	P-110	1	**Extraction Well 2 Pump (P-110)** Model: Grundfos 60S20-4 Type: Submersible Well Pump Material: Teflon fillted pump, Viton Motor, and 30' Teflon Jacketed Cable. Pump Connection: 2" FNPT Power Requirements: 3-phase 460-VAC Motor- Franklin Pollution Recovery Model PRM2046033 Motor Size / FLA / TDH: 2-HP / ~14-amps / 60-ft Flow Requirement: 50 gpm	Grundfos	Pumps of Oklahoma
3	V-101, V-108	2	**Globe Valves** VALVE, GLOBE, FNPT, 2", 200 WOG 125 WSP, BRONZE/BRASS, WATTS-2GLV	Watts	PLC
4	PI-101/102/103/201/301	5	**Pressure Indicator** WIKA MODEL 232.54 0-100 PSI 4 INCH 1/2 L VALVE, BALL, TRUE UNION SOCKET/FNPT, 3/4", SCH 80 PVC/VITON, CEPEX-21980VIT, 89997075	Wika	PLC
5	V-111/112/113/104/105/106	6	**VALVE, BALL** TRUE UNION SOCKET/FNPT, 2", SCH 80 PVC/VITON, CEPEX-21984VIT, 89997200	Cepex	PLC
6	V-114/107	2	**VALVE, SWING CHECK** FNPT, 2", 200 NSWOG 125 SWP, BRASS/BUNA, MATCO-521T08	Matco	PLC
7	P-200	1	**Transfer Pump (P-200)** Model: Goulds 3ST1H5B4 Type: Centrifugal Pump Material: 316SS with teflon seals. Power Requirements: 3-phase 460-VAC Motor Size / FLA / TDH: 3-HP / ~27-amps / 65-ft Flow Requirement: 100-gpm Motor Enclosure: Motor not totally enclosed.	Goulds	Pumps of Oklahoma
8	P-300	1	**Injection Pump (P-300)** Model: Goulds Model 3ST1F5E4 Material: 316SS with teflon seals. Power Requirements: 3-phase 460-VAC Motor Size / FLA / TDH: 1.5-HP / ~27-amps / 25-ft Flow Requirement: 100-gpm Motor Enclosure: Motor not totally enclosed.	Goulds	Pumps of Oklahoma
9	EW-1 and EW-2	2	**Pitless Adapter** Model :S-20, 95202 Viton Seals	Dickens	Maass Midwest
10	T-400	1	**Solids Settling Tank** Model: ASSMAN ICT-5500 Capacity: 5500 gallons Heat Tracing: 80 degree delta T Insulation: Foam	ASSMANN	NorthEastern Reliability/Koester
11	Trench 1, 2, 3, 4, and 5	5	**Prefabricated Infiltration Trench Manhole** Material: HDPE Dimensions: 78" H x 48"6 SDR 32.5 HDPE See Contract Drawing 11	ISCO	ISCO
12	T-200/300	2	**1,450 Gallon Equalization Tank** Model: Poly processing 1001450 Capacity: 1450-Gallon Material: High density polyethylene	Poly Processing	PLC
13	T-500/600	2	**Air Compressor** Model: Kaeser Type: Aircenter packaged rotary screw air compressor with integral refrigerated dryer (460VAC, 60 HZ, 3 Phase), ECO-drain electronic demand drain, sound attenuated enclosure (67 DB(A)), PC-Based sigma control basic system, two-stage4 micron air intake filter, and three-stage separation system, tank-mounted on a steel framw/72-gallon ASME air receiver with a safety relief valve, isolation valves, and optional clean air treatment package Produces: 28.5 corrected SCFM of air at 125 PSIG	Kaeser	PLC/Air Sep
14	Venturi Injector	1	**Venturi Injector** MAZZEI MODEL 2081 PVDF BODY WITH 2" 150# FLANGE INLET & DISCHARGE, 100 GPM AT 50 PSIG INLET, 100 CFH AT 45 PSIG MAX OXYGEN INJECTION	Mazzei	PLC
15	Flash Reactor	1	**Flash Reactor** MAZZEI MODEL FR235-A 2" 150# FLANGE INLET & DISCHARGE.STAINLESS STEEL CONSTRUCTION	Mazzei	PLC
16	T-800/T-900	1	**Oxygen Generator** Model: Airsep AS-D+100 series PSA osygen generator part number AS097-1 Accessories: accessory kits part number KI425-1 and KI474-1 60-Gallon ASME oxygen-cleaned receiver part number TA150-1 Power: 110/120 VAC, 50/60 HZ, 1 Phase Calibration: deliver 100 SCFH of 90 to 95% purity oxygen at a maximum delivery pressure of 45 PSIG	Air Sep	PLC/Air Sep
17	PSL-900	1	**PRESSURE SWITCH** 1.5-150PSIG SINGLE CONTACT ADJUSTABLE RANGE, 300PSIG MAX, NEMA 4 CD1H-A150SS	BARKSDALE	PLC

Groundwater Remediation System
Former Tappan Terminal Site
Hastings on Hudson, New York

Equipment List

18	V-126	1	**PRESSURE REGULATOR** WILKERSON-R18-04-D000 , RELIEVING, 1/2" FNPT, 3-60 PSIG, NO GAUGE, 97 SCFM CAPACITY	WILKERSON	PLC
19	V-128	1	**NEEDLE VALVE** 1/4" 5WLIZ	GRAINGER	PLC
20	AE/AIT-800	1	**Oxygen Sensor** XNX-UTAE-RNNNN, XNX Universal Transmitter 1226-9000, UL/CSA, 3/4, Aluminum, Electrochemical and relays and XNXXS02SS, XNX Sensor Oxygen 0 - 25%	XNX	RAECO
21	PIT-800	1	**Atmospheric Pressure Transmitter (Barometer) and Signal Conditioner** Vaisala PTB110 Barometer with Weidmuller DC/DC signal conditioner (configurable)	Vaisala/Weidmuller	FCx Performance
22	AE/AIT-300	1	**Dissolved Oxygen Probe/Controller** Model: Hach LDO Probe 9020000-SC200 Type: Mounting Conversion Adapter, SC200 Controller with 2 channels	Hach	Hach
23	LT-100/110	2	**Level Transmitter** Model: Geotech 8205102 Type: pressure transducer shall be non-vented, cable shall be 25-feet long Range: 30-PSI	Geotech	Geotech
24	LT-700/704	5	**Level Transducer** Model: Geotech 8205102 Type: pressure transducer shall be non-vented, cable shall be 10-feet long Range: 30-PSI	Geotech	Geotech
25	LT-705/708	4	**Level Transmitter** Model: Geotech 8205102 Type: pressure transducer shall be non-vented, cable shall be 20-feet long Range: 30-PSI	Geotech	Geotech
26	PI-700/708	9	**Pressure Indicator** WIKI MODEL 232.54 0-50 PSI 4 INCH 1/2 L, VALVE, BALL, TRUE UNION SOCKET/FNPT, 3/4", SCH 80 PVC/VITON, CEPEX-21980VIT, 89997075	Wika	PLC
27	PI-900/901	2	**Pressure Indicator** GAUGE, PRESSURE, 0-100 PSI 2 1/2" DIAL 1/4" MNPT LM LIQUID FILLED	Dasco	PLC
28	FIT-100/110/201/700	4	**Flow Indicating Transmitter** BADGER 2" M2000 SERIES MAGMETER, TEFLON LINER, 120 VAC, INTEGRAL TRANSMITTER, LOCAL RATE AND TOTAL DISPLAY, 4-20 MA OUTPUT, PULSE OUTPUT, REMOTE RESET AND GROUNDING RINGS.	BadgerMeter, INC	PLC
29	Discharge Mainfold Ball Valves	9	**VALVE, BALL** TRUE UNION SOCKET/FNPT, 1 1/2", SCH 80, PVC/VITON, CEPEX-21983VIT, 89997150	Cepex	PLC
30	V-710/719	9	**VALVE, GLOBE** 1 1/2" FNPT, 150WOG/100WSP, BRONZE, RED-WHITE FIGURE NO. 210	Red-White	PLC
31	LE/LIT-200/300	2	**Level Indicating Transmitter** WIKA LS -10 LEVEL TRANSMITTER, 4-20mA OUTPUT, 0-100 INCHES WATER COLUMN RANGE, WITH 25 ' CBL	Wika	PLC
32	VFD	2	**Variable Frequency Drive** Model: ABB ACS355 Drive	ABB	Pumps of Oklahoma
33	PS-200/300	2	**Pressure Switch** PRESSURE SWITCH, 0.5-80PSIG SINGLE CONTACT ADJUSTABLE RANGE, 160PSIG MAX, NEMA 4 17-7PH, BARKSDALE-CD1H-A80SS	BARKSDALE	PLC
34	FT-300/380	9	**Flow Totalizer** 1.5" FNPT Badger Flow meters model RCDL c/w RTR Transmitter, 2-120 GPM NORMAL FLOW RANGE, 8E064-00-VB060	BadgerMeter, INC	PLC
35	FM-200	1	**Flow meter** DWYER MODEL IF2702 FLOW METER 3 SCFM	Dwyer	PLC
36	LSHH-200/300/400-LSLL-200/300	5	**Level Switch** LEVEL SWITCH, VERTICAL, SINGLE LEVEL SWITCHING, CABLE RESTRAINT MOUNT, 50' TFFN CORD, ACETAL FLOAT, BRASS BODY PLC-SDA0-SFT275-NC	PLC	PLC
37	SV-900	1	**Solenoid Valve** ASCO-8210G094-120 / 60 SOLENOID VALVE, 2 WAY / 2 POSITION, N.C., 120 VAC, 1/2", 0 PSI CRACKING PRESSURE, 150 PSI MAX AIR, 150 PSI MAX WATER, 180°F MAX, NON-EXP, Standard Red Hat II	ASCO	PLC
38	TIT-800	1	**Temperature Indicating Transmitter** PYROMATION TEMPERATURE SENSOR ASSEMBLY- RTD: +-0.1%, -328-400°F RANGE, 1/4" DIAMETER X 2" LONG STRAIGHT 316 SS SHEATH WITH 1/2" X 1/2" MNPT HEX STEEL HEAD. HEAD: CAST ALUMINUM SCREW COVER. TRANSMITTER:100 OHM PLATINUM UPSCALE BURNOUT TRANSMITTER, 2 WIRE OUTPUT, 0-150°F RANGE	Pyromation	PLC
39	Building Heaters	2	**Unit Heaters** 10,000 WATT FORCED AIR HEATER WITH WALL MOUNT BRACKET, MODEL IUH1048 HEATER, MT BRACKET CWB1	Qmark	PLC
40	Building Exhaust Fan	1	**Exhaust Fan** Direct Drive, Shutter Mounted, Single Speed, Propeller Dia 18 In, CFM @ 0.000-In SP 2590, @ 0.125-In SP 2190, @ 0.250-In SP 1705, Sones @ 0.000-In. SP @ 5 Ft. 14.3, Voltage 115, 60 Hz, Single Phase, Full Load Amps 4.5, HP 1/4, Max Ambient Temp 104 F, Motor Type Shaded Pole, Bearing Type Sleeve, Height 21 1/8 In, Width 21 1/8 In, Max Depth 18 1/4 In, Sq Opening Required 19 In, Propeller Material Stamped Aluminum, Guard Material Steel, Includes Automatic Shutter, GRAINGER 1HLA5	Grainger	PLC

Groundwater Remediation System
Former Tappan Terminal Site
Hastings on Hudson, New York

Equipment List

41	Louver	1	**Vent** 24" X 24" ALUM MOTORIZED LOUVER VENT, McMASTER-2047K5171	McMaster-Carr	PLC
42	Thermostat	1	**THERMOSTAT** LINE VOLTAGE HEATING OR COOLING INDUSTRIAL THERMOSTAT, 5' REMOTE BULB, 0 TO +120°F, SPDT, 120/240VAC 16/12AMPS, NEMA 4X, GRANGER-4MY93	Grainger	PLC
43	LSHH-800	1	**LEVEL SWITCH** VERTICAL, SINGLE LEVEL SWITCHING, CABLE RESTRAINT MOUNT, 50' TFFN CORD, ACETAL FLOAT, BRASS BODY, PLC-SDA0-SFT275-NO	PLC	PLC
44	Pipe Heat Trace		**Heat Trace** Danfoss PX Self-Regulating Cable 088L1453, 120 V, 10W/ft	Danfoss	D & M
45	V-116/117/121/134	4	**VALVE, BALL** TRUE UNION SOCKET/FNPT, 3", SCH 80 PVC/VITON	Cepex	PLC
46	V-119/136	2	**VALVE, SWING CHECK** FNPT, 3", 200 NSWOG 125 SWP, BRASS/BUNA, MATCO	Matco	PLC
47	V-120/122/137	3	**Globe Valves** VALVE, GLOBE, FNPT, 3", 200 WOG 125 WSP, BRONZE/BRASS, WATTS	Watts	PLC
48	XCV-200	1	**Motorized Control Valve** 3" MOTOR DRIVEN BRASS BALL VALVE 110 VAC ELECTRIC ON/OFF ACTUATOR, 8E064-00-VB060	Rubinetterie Bresciane/Valbia	PLC

GRUNDFOS

Company name: -
Created by: -
Phone: -
Fax: -
Date: -

Position	Count	Description	Unit price
	1	**60S20-4** Product No.: 06110004 Multi-stage submersible pump for raw water supply, groundwater lowering and pressure boosting. The pump is suitable for pumping clean, thin, non-agressive liquids without solid particles or fibers. The pump is made entirely of Stainless steel DIN W.-Nr. DIN W.-Nr. 1.4301and suitable for horizontal and vertical installation. The pump is fitted with a built-in non-return valve. **Liquid:** Maximum liquid temperature: 104 °F Liquid temp: 68 °F Density: 998.2 kg/m³ **Technical:** Speed for pump data: 3450 rpm Actual calculated flow: 61.6 US gpm Resulting head of the pump: 92.1 ft **Materials:** Pump: Stainless steel DIN W.-Nr. 1.4301 AISI 304 Impeller: Stainless steel DIN W.-Nr. 1.4301 AISI 304 **Installation:** Pump outlet: 2" NPT Motor diameter: 4 inch **Electrical data:** Power (P2) required by pump: 2.41 HP Main frequency: 60 Hz Start. method: direct-on-line	On request

Position	Count	Description	Unit price
	1	**60S20-4**	On request

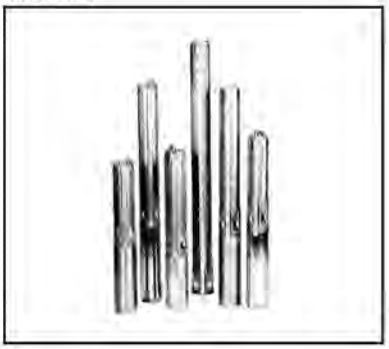

Product photo could vary from the actual product

Product No.: 06110004
Multi-stage submersible pump for raw water supply, groundwater lowering and pressure boosting. The pump is suitable for pumping clean, thin, non-agressive liquids without solid particles or fibers.

The pump is made entirely of Stainless steel DIN W.-Nr. DIN W.-Nr. 1.4301and suitable for horizontal and vertical installation.
The pump is fitted with a built-in non-return valve.

Liquid:

Maximum liquid temperature:	104 °F
Liquid temp:	68 °F
Density:	998.2 kg/m³

Technical:

Speed for pump data:	3450 rpm
Actual calculated flow:	61.6 US gpm
Resulting head of the pump:	92.1 ft

Materials:

Pump:	Stainless steel DIN W.-Nr. 1.4301 AISI 304
Impeller:	Stainless steel DIN W.-Nr. 1.4301 AISI 304

Installation:

Pump outlet:	2" NPT
Motor diameter:	4 inch

Electrical data:

Power (P2) required by pump:	2.41 HP
Main frequency:	60 Hz
Start. method:	direct-on-line

Company name: -
Created by: -
Phone: -
Fax: -
Date: -

06110004 60S20-4 60 Hz

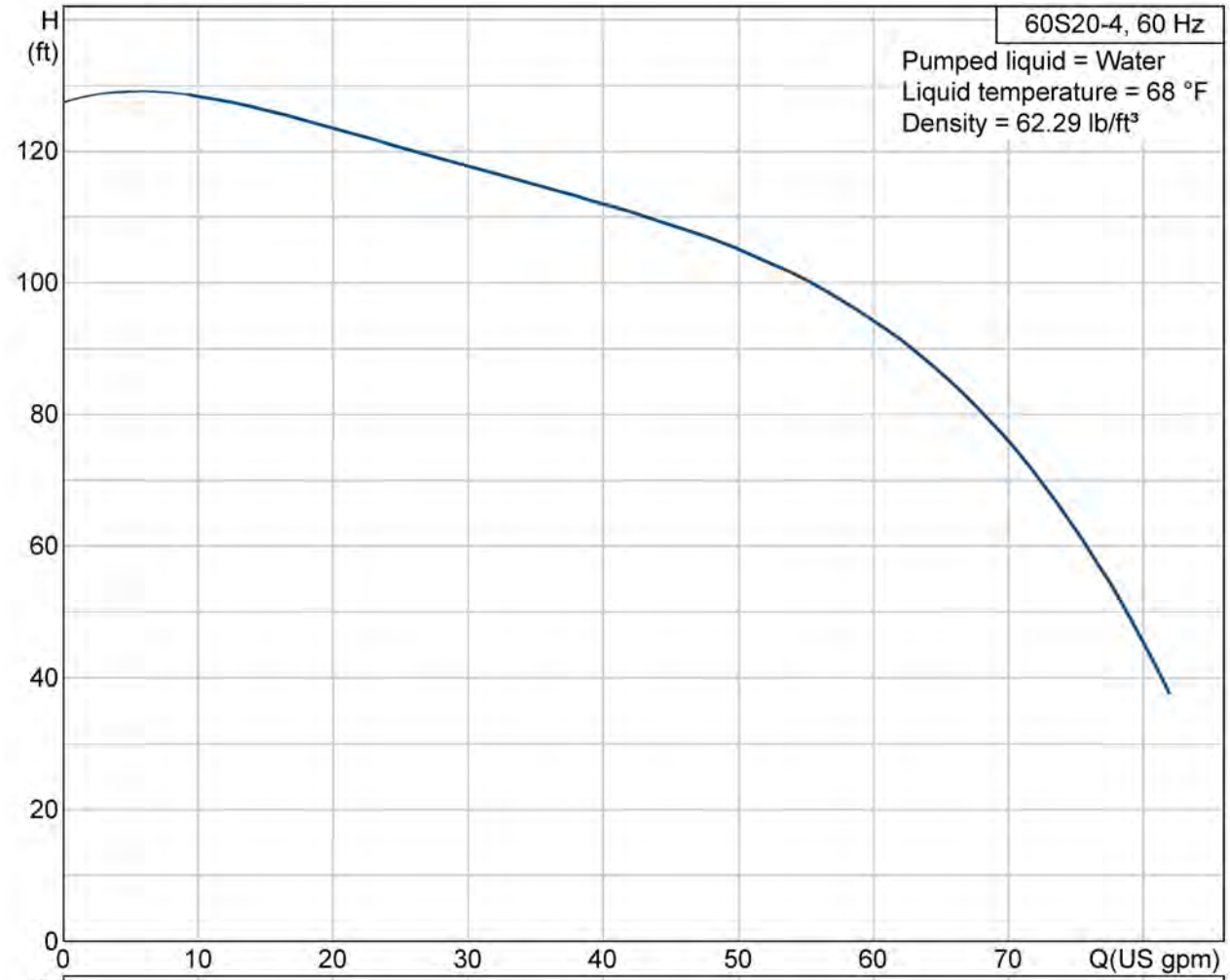

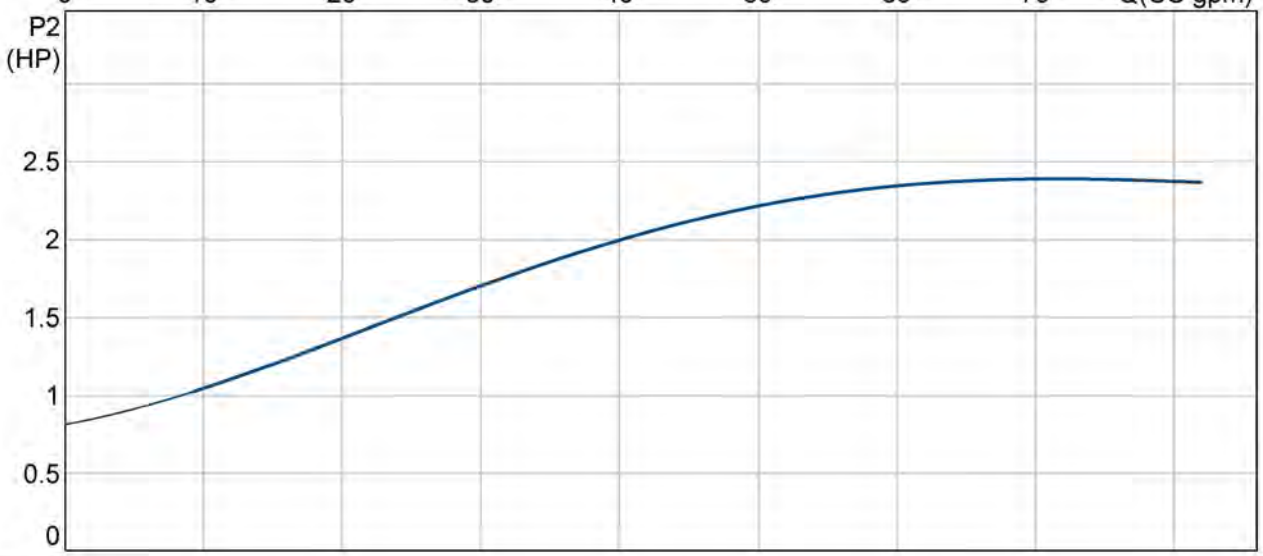

Company name: -
Created by: -
Phone: -
Fax: -
Date: -

Description	Value
Product name:	60S20-4
Product Number:	06110004
EAN number:	5700390254445
Technical:	
Speed for pump data	3450 rpm
Actual calculated flow:	61.6 US gpm
Flow range	9.03 .. 80 US gpm
Max flow:	80 US gpm
Resulting head of the pump:	92.1 ft
Stages:	4
Model:	A
Valve:	pump with built-in non-return valve
Materials:	
Pump:	Stainless steel
	DIN W.-Nr. 1.4301
	AISI 304
Impeller:	Stainless steel
	DIN W.-Nr. 1.4301
	AISI 304
Installation:	
Pump outlet:	2" NPT
Motor diameter:	4 inch
Liquid:	
Maximum liquid temperature:	104 °F
Liquid temp:	68 °F
Density:	998.2 kg/m³
Electrical data:	
Applic. motor:	GRUNDFOS
Power (P2) required by pump	2.41 HP
Main frequency:	60 Hz
Start. method:	direct-on-line
Others:	
Sales region:	Namreg

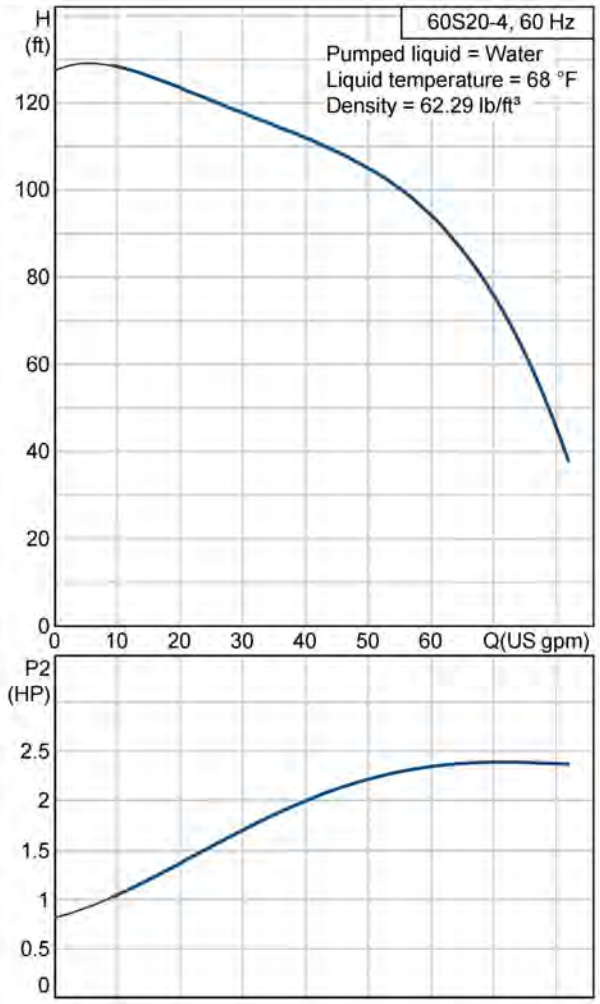

06110004 60S20-4 60 Hz

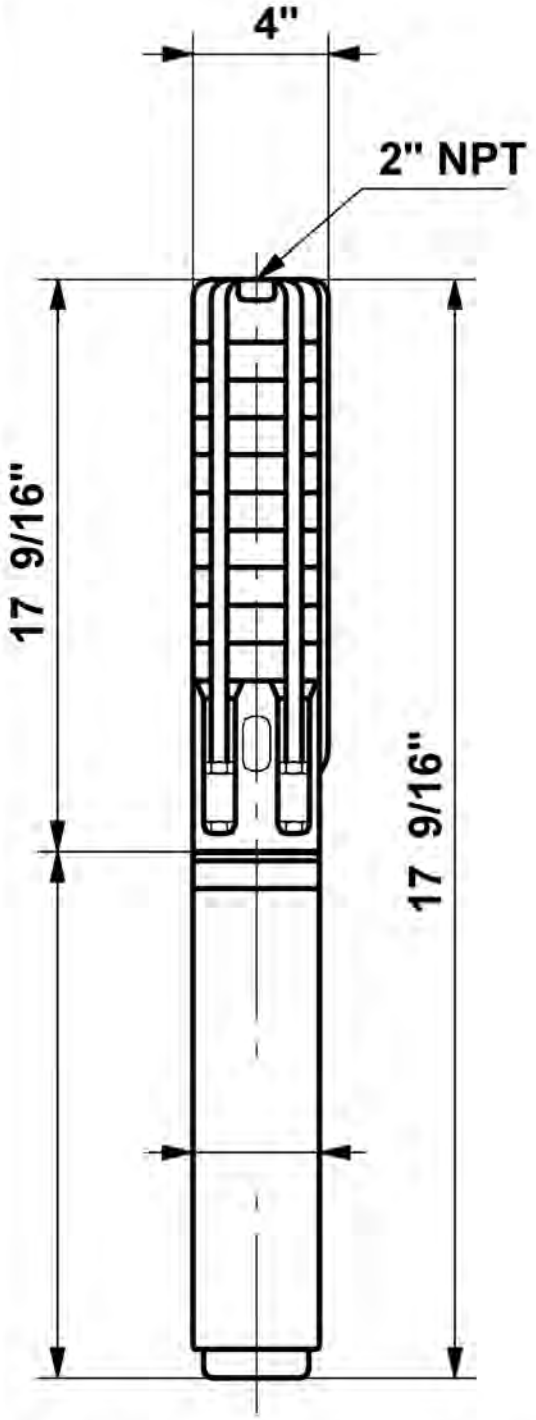

Note! All units are in [mm] unless others are stated.
Disclaimer: This simplified dimensional drawing does not show all details.

GOULDS PUMPS

Submittal Data

NPE Stainless Steel

End Suction Stainless Steel Pumps

MODEL : 3ST1H5B4

Hydraulic Data					Motor Data	NPE	Qty.
Maximum Flow	Flow at Duty Point	Maximum TDH	TDH at Duty Point	$NPSH_R$	Voltage / Phase / Enclosure	Model	
159 US g.p.m.	100 US g.p.m.	78 ft	65 ft	7 ft	208-230V 3PH TEFC	3ST1H5B4	1

Submittal Prepared for:
Engineer:
Submittal Prepared by:
Submittal Date: 2012-02-08

Job:
Contractor:
Company:
Approved by: Date:

Engineering Data

Pump Code: 3ST1H5B4
Pump Size: 1 1/2 x 2 - 6
Pump Max Horsepower: 2.8154 hp
Pump Horsepower at Rating Point: 2.47 hp
Pump Shut Off Head: 78 ft
Motor Speed: 3500 rpm
Max. Temperature: 212 °F
Liquid: Water
Motor Code: E09876S
System Input Power: 3~ 230 V
Motor Rated Horsepower: 3.00 hp
Max. Frequency:60
Electrical Enclosures:TEFC
Motor Standard: NEMA
Suction Flange Standard: NPT
Suction Flange Rating: 125 PSI
Suction Size: 2"
Discharge Flange Standard:NPT
Discharge Flange Rating: 125 PSI
Discharge:1 1/2"
Approximate Net Weight: 48 lb
Impeller Size: $4^5/_8$"
Impeller Construction: Closed
Impeller Type: Radial impeller
Impeller Material:
AISI 316L Stainless Steel
Sense of Rotation: Clockwise from the drive end
Shaft Seal: Carbon/Sil-Carbide/Viton

Standard Equipment / Capability:

High Efficiency Impeller:
Enclosed impeller with unique floating seal ring design maintains maximum efficiencies over the life of the pump without adjustment.
Mechanical Seal:
Standard John Crane Type 21 with carbon versus silicon-carbide faces, Viton elastomers, and 316 stainless metal parts. Optional high temperature and chemical duty seals available.
Motors:
NEMA standard open drip-proof, totally enclosed fan cooled or explosion proof enclosures. Rugged ball bearing design for continuous duty under all operating conditions.
Superior Materials of Construction:
Complete AISI 316L stainless steel liquid handling components and mounting bracket for corrosion resistance, quality appearance, and improved strength and ductility.
Casing and Adapter Features:
Stainless steel construction with NPT threaded, centerline connections, easily accessible vent, prime and drain connections with stainless steel plugs. Optional seal face vent/flush available.

GOULDS PUMPS

Performance Data

NPE Stainless Steel

End Suction Stainless Steel Pumps

MODEL : 3ST1H5B4

Hydraulic Data					Motor Data	NPE	Qty.
Maximum Flow	Flow at Duty Point	Maximum TDH	TDH at Duty Point	$NPSH_R$	Voltage / Phase / Enclosure	Model	
159 US g.p.m.	100 US g.p.m.	78 ft	65 ft	7 ft	208-230V 3PH TEFC	3ST1H5B4	1

Submittal Prepared for:
Engineer:
Submittal Prepared by:
Submittal Date: 2012-02-08

Job:
Contractor:
Company:
Approved by:
Date:

Fluid: Water
Duty Chart: 3500 RPM

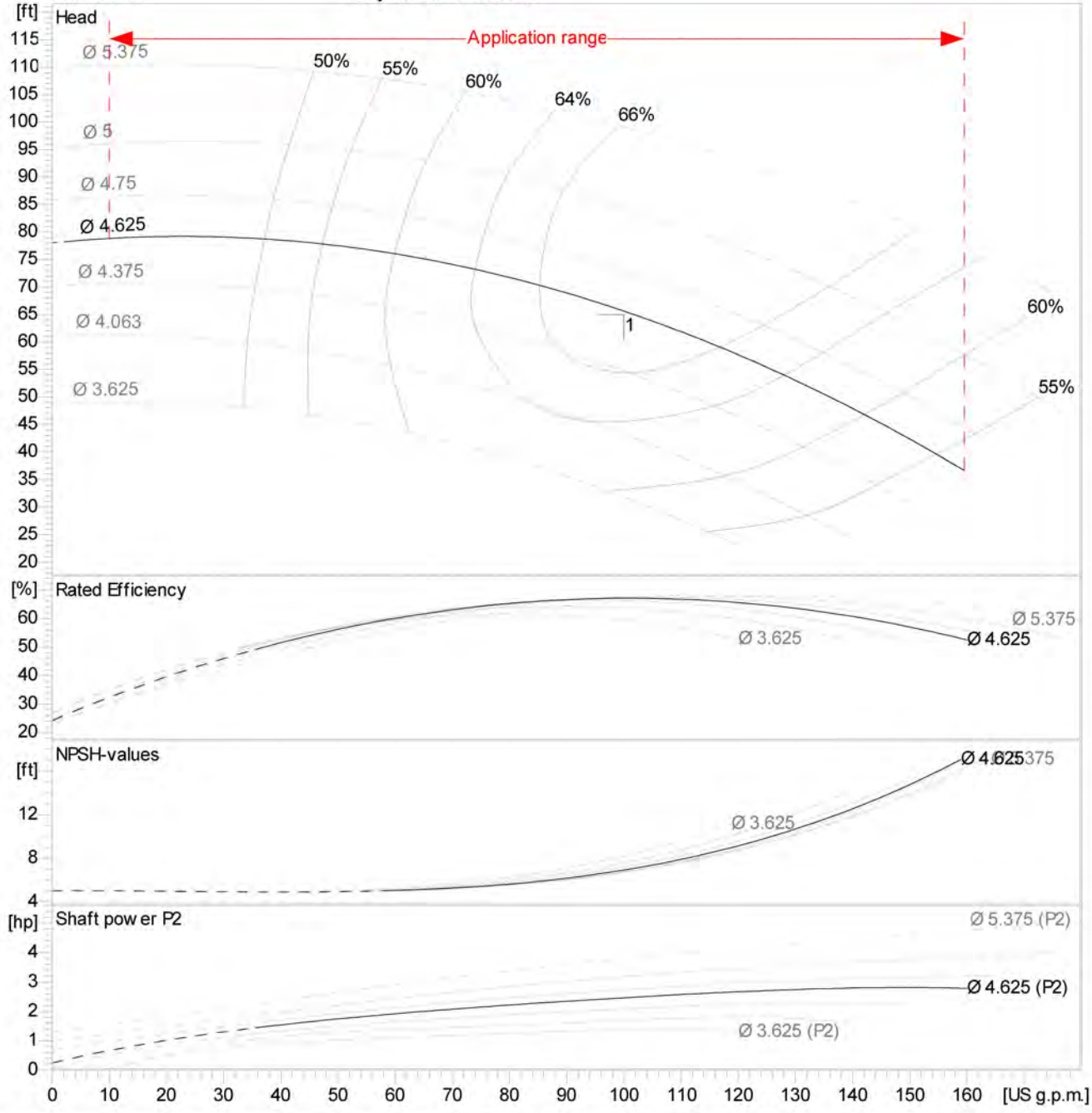

Printed from data file
2012-02-08

GOULDS PUMPS

Submittal Data

NPE Stainless Steel

End Suction Stainless Steel Pumps

MODEL : 3ST1F5E4

Hydraulic Data					Motor Data	NPE	Qty.
Maximum Flow	Flow at Duty Point	Maximum TDH	TDH at Duty Point	$NPSH_R$	Voltage / Phase / Enclosure	Model	
120 US g.p.m.	0 US g.p.m.	49 ft	0 ft		208-230V 3PH TEFC	3ST1F5E4	1

Submittal Prepared for:
Engineer:
Submittal Prepared by:
Submittal Date: 2012-02-08

Job:
Contractor:
Company:
Approved by: Date:

Engineering Data

Pump Code: 3ST1F5E4
Pump Size: 1 1/2 x 2 - 6
Pump Max Horsepower: 1.3926 hp
Pump Horsepower at Rating Point:
Pump Shut Off Head: 49 ft
Motor Speed: 3500 rpm
Max. Temperature: 212 °F
Liquid: Water, pure
Motor Code: E07876S
System Input Power: 3~ 230 V
Motor Rated Horsepower: 1.50 hp
Max. Frequency:60
Electrical Enclosures:TEFC
Motor Standard: NEMA
Suction Flange Standard: NPT
Suction Flange Rating: 125 PSI
Suction Size: 2"
Discharge Flange Standard:NPT
Discharge Flange Rating: 125 PSI
Discharge:1 1/2"
Approximate Net Weight: 31 lb
Impeller Size: $3^5/_8$"
Impeller Construction: Closed
Impeller Type: Radial impeller
Impeller Material:
AISI 316L Stainless Steel
Sense of Rotation: Clockwise from the drive end
Shaft Seal: Carbon/Sil-Carbide/Viton

Standard Equipment / Capability:

High Efficiency Impeller:
Enclosed impeller with unique floating seal ring design maintains maximum efficiencies over the life of the pump without adjustment.
Mechanical Seal:
Standard John Crane Type 21 with carbon versus silicon-carbide faces, Viton elastomers, and 316 stainless metal parts. Optional high temperature and chemical duty seals available.
Motors:
NEMA standard open drip-proof, totally enclosed fan cooled or explosion proof enclosures. Rugged ball bearing design for continuous duty under all operating conditions.
Superior Materials of Construction:
Complete AISI 316L stainless steel liquid handling components and mounting bracket for corrosion resistance, quality appearance, and improved strength and ductility.
Casing and Adapter Features:
Stainless steel construction with NPT threaded, centerline connections, easily accessible vent, prime and drain connections with stainless steel plugs. Optional seal face vent/flush available.

GOULDS PUMPS

Performance Data

NPE Stainless Steel

End Suction Stainless Steel Pumps

MODEL : 3ST1F5E4

Hydraulic Data					Motor Data	NPE	Qty.
Maximum Flow	Flow at Duty Point	Maximum TDH	TDH at Duty Point	$NPSH_R$	Voltage / Phase / Enclosure	Model	
120 US g.p.m.	0 US g.p.m.	49 ft	0 ft		208-230V 3PH TEFC	3ST1F5E4	1

Submittal Prepared for:
Engineer:
Submittal Prepared by:
Submittal Date: 2012-02-08

Job:
Contractor:
Company:
Approved by:
Date:

Fluid: Water, pure
Duty Chart: 3500 RPM

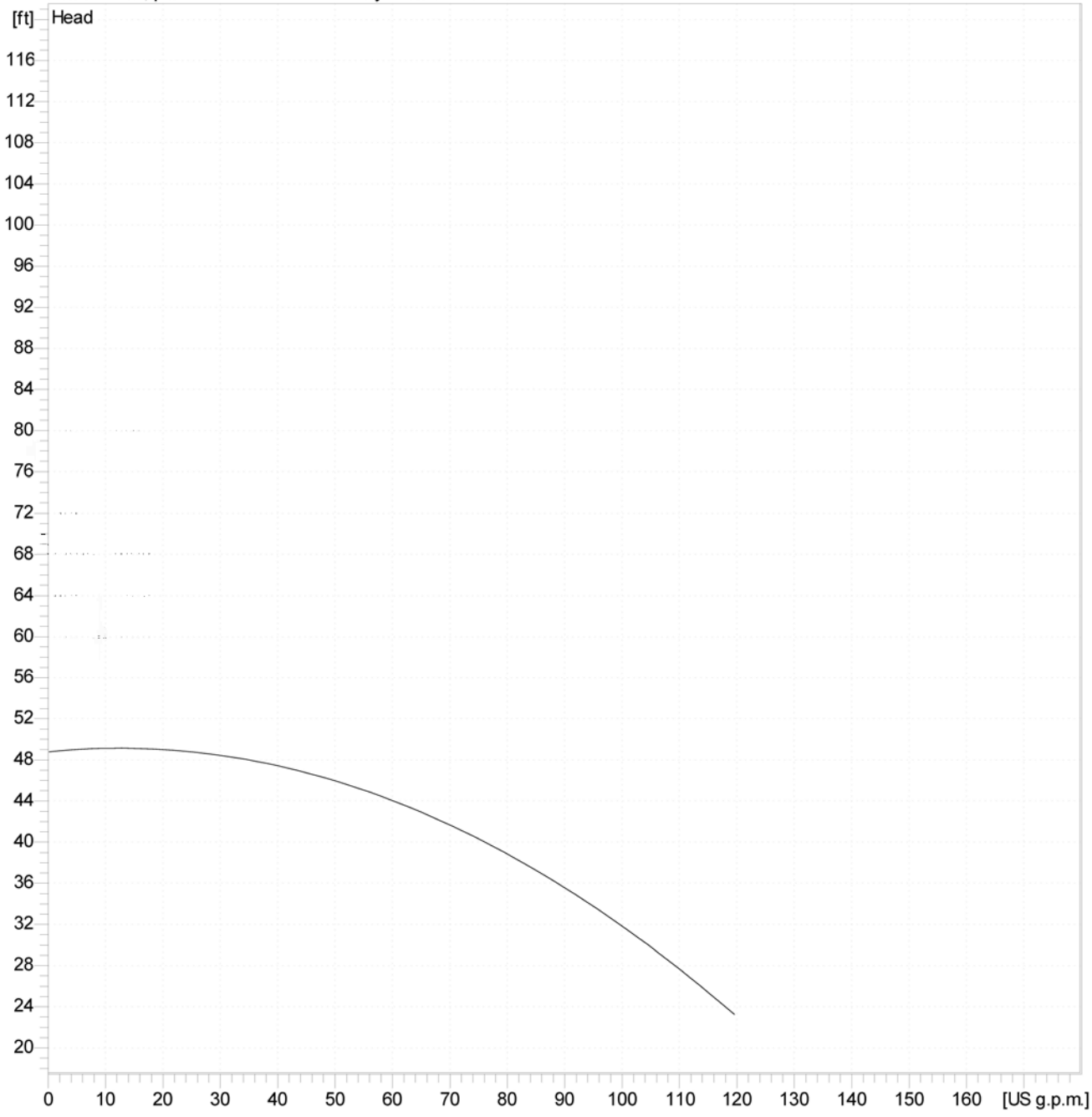

Printed from data file
2012-02-09

GOULDS PUMPS

Unit Dimensions

NPE Stainless Steel

End Suction Stainless Steel Pumps

MODEL : 3ST1F5E4

Hydraulic Data					Motor Data	NPE	Qty.
Maximum Flow	Flow at Duty Point	Maximum TDH	TDH at Duty Point	$NPSH_R$	Voltage / Phase / Enclosure	Model	
120 US g.p.m.	0 US g.p.m.	49 ft	0 ft		208-230V 3PH TEFC	3ST1F5E4	1

Submittal Prepared for:
Engineer:
Submittal Prepared by:
Submittal Date: 2012-02-08

Job:
Contractor:
Company:
Approved by: Date:

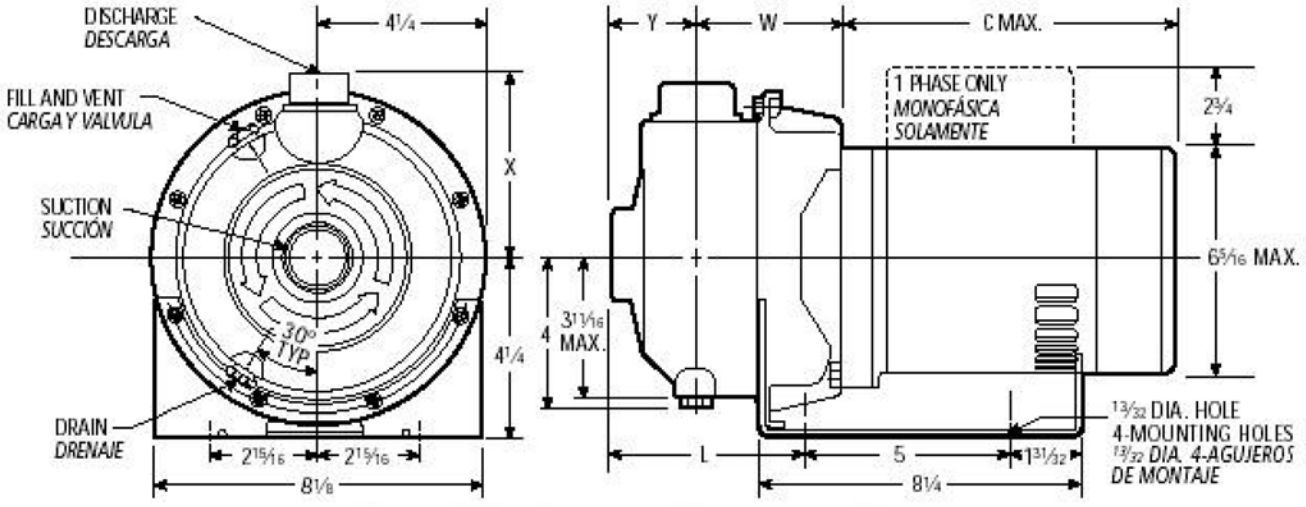

Dimension	Value	Dimension	Value
C	11 7/8		
Cmax	11 5/16		
Discharge	1.5 NPT		
L	5 1/8		
M	7 7/8		
Suction	2 NPT		
W	3 3/4		
X	4 5/8		
Y	2 1/8		

Printed from data file
2012-02-09

dicken™ PITLESS ADAPTERS Made in the USA

Features:

- Precision machined all red brass castings with neoprene O-ring
- Large inner and outer rubber gaskets to seal out surface water contamination
- All Dicken pitless adapters are pressure tested to 150 psi
- Chamfered slide for fast and easy installation
- Wrench grip on ell speeds installation
- A built in lowering eyelet for easier installation
- Water System Council - PAS-97 (04) listed

Part Number	Model	Discharge Pipe (Inches)	Supply Pipe (Inches)	Casing Size (Inches) I.D.	Hole Size Required (Inches)	Shipping Weight (lbs-oz.)	Working Load (lbs)	Quantity /Carton
952156	JR-S-10	1	1	4 1/2 to 12	1 5/8	2 lbs. 5 oz.	1500	12
952158	*JR-S-10-P	1	1	4 1/2 to 12	1 5/8	2 lbs. 5 oz.	1500	12
952110	LD-S-10	1	1	5 to 12	1 3/4	4 lbs. 2 oz.	2000	12
952160	*LD-S-10-P	1	1	5 to 12	1 3/4	4 lbs. 3 oz.	2000	12
952112	LD-S-12	1 1/4	1 1/4	5 to 12	2 1/4	5 lbs. 8 oz.	2000	8
952162	*LD-S-12-P	1 1/4	1 1/4	5 to 12	2 1/4	5 lbs. 9 oz.	2000	8
952010	S-10	1	1	5 to 12	1 3/4	5 lbs.13 oz.	5000	8
952012	S-12	1 1/4	1 1/4	5 to 12	2 1/4	8 lbs. 2 oz.	5000	6
952015	S-15	1 1/2	1 1/2	5 3/16 to 12	2 5/8	10 lbs.12 oz.	5000	6
952016	S-15P	1 1/2	1 1/2	5 3/16 to 12	2 5/8	10 lbs.12 oz.	5000	6
952020	S-20	2	2	5 5/8 to 12	3 1/8	14 lbs. 4 oz.	5000	4
952150	LD-2-X upper LD-2-X lower	1 1/4 1	1 1/4 1	4 1/2 to 12	2 1/4 1 1/4	11 lbs. 9 oz.	2000	6

- Pressurized model available for counties and states where required.
- JR-S-10 may be used on 4" casing with 3" pump.
- NOTE: Part Number 952015 Model S-15 not designed for STR17 5" PVC casing.

CLEARWAY PITLESS ADAPTER Patented

Features:
- Simple slip fit insert
- Easy installation by cutting 2 3/4" hole and clamping on
- Clamp on units for no obstruction in well casing ID

Part Number	Model	Discharge Pipe (Inches)	Supply Pipe (Inches)	Casing Size (Inches) I.D.	Casing Size (Inches) O.D.	Hole Size Required (Inches)	Shipping Weight (lbs-oz.)	Working Load (lbs)	Quantity /Carton
952040	CW-4-10	1	1	4	4 1/2	2 3/4	5 lbs. 1 oz.	2000	6
952050	CW-5-10	1	1	4 1/2 5	5 5 9/16	2 3/4	5 lbs. 0 oz.	2000	6
952060	CW-6-10	1	1	5 5/8 6	6 6 5/8	2 3/4	5 lbs. 14 oz	2000	6
952045	CW-4-10-WA	1	1	4	4 1/2	2 3/4	6 lbs. 0 oz.	2000	6
952047	CW-4.5-10-WA	1	1	4 1/2	5	2 3/4	6 lbs. 8 oz.	2000	6
952055	CW-5-10-WA	1	1	5	5 9/16	2 3/4	6 lbs. 8 oz.	2000	6
952065	CW-4-12-WA	1 1/4	1 1/4	4	4 1/2	2 3/4	6 lbs. 5 oz.	2000	6
952066	CW-4.5-12-WA	1 1/4	1 1/4	4 1/2	5	2 3/4	6 lbs. 12 oz.	2000	6
952067	CW-5-12-WA	1 1/4	1 1/4	5	5 9/16	2 3/4	6 lbs. 5 oz.	2000	6
952058	CW-6-12-WA	1 1/4	1 1/4	6	6 5/8	2 3/4	6 lbs. 15 oz.	2000	6

Features:
- Pressurized for use in Michigan, Illinois
- Designed for 4" or 5" well casing
- Fits Schedule 40 through SDR21
- Unit comes complete with WTTC Michigan/Illinois Approved cap as described on Page 14

Part Number	Model	Discharge Pipe (Inches)	Supply Pipe (Inches)	Casing Size (Inches) I.D.	Casing Size (Inches) O.D.	Hole Size Required (Inches)	Shipping Weight (lbs-oz.)	Working Load (lbs)	Quantity /Carton
952075	CW-4-12 -WA-25P	1 1/4	1 1/4	4	4 1/2	2 3/4	6 lbs. 5 oz.	2000	6
952076	CW-5-12 -WA-25P	1 1/4	1 1/4	5	5 9/16	2 3/4	6 lbs. 5 oz.	2000	8
952077	CW-6-12 -WA-25P	1 1/4	1 1/4	6	6 5/8	2 3/4	6 lbs. 15 oz.	2000	6

Features:
- Pressurized with WTCC cap

Part Number	Model	Discharge Pipe (Inches)	Supply Pipe (Inches)	Casing Size (Inches) I.D.	Casing Size (Inches) O.D.	Shipping Weight (lbs-oz.)	Working Load (lbs)	Quantity /Carton
952043	CW-4-10-WA25P W/4 WTCC CAP	1	1	4	4 1/2	7.3	2000	1
952053	CW-5-10-WA25P W/5 WTCC CAP	1	1	5	5 9/16	9.8	2000	1

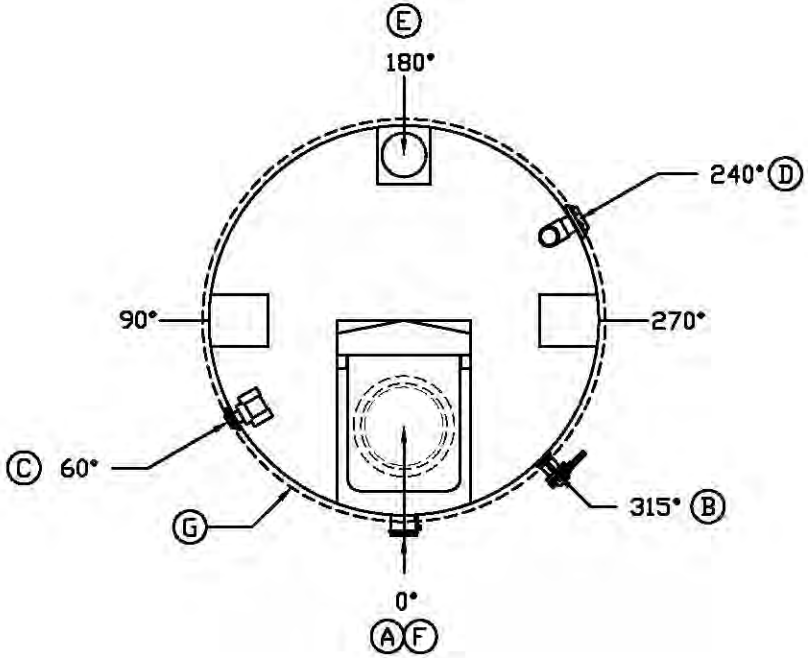

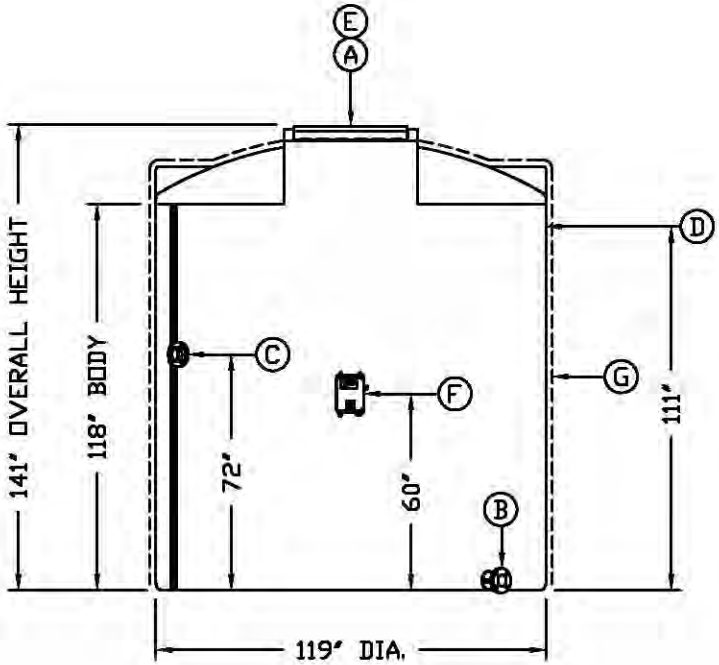

ACCESSORIES					
MK	SIZE	DESCRIPTION	DEG	ELEV	DOME
A	24"	MANWAY W/ POLYETHYLENE HINGED COVER	0°	-	X
B	3"	FDO W/ 316 SS INSERT & XLPE FLANGE ADAPTER, & PVC BUTTERFLY VAVLE & SS BOLT SET	315°	-	-
C	3"	PVC FLANGE FTG. W/ SS-VITON BOLT/ VITON GASKET, & PVC HALF 4" NIPPLE CUT AND WELDED TO BACK OF FLANGE, 3" X 6" SLIP REDUCER & 6" PVC SOLVENT WELDED TEE PLACED HORIZONTALLY	60°	72"	-
D	6"	PVC FLANGE FTG. W/ SS-VITON BOLT/ VITON GASKET, & PVC PIPE WELDED TO BACK OF FLANGE, & PVC SOLVENT WELDED TEE PLACED VERTICALLY	240°	111"	-
E	6"	POLYETHYLENE MUSHROOM VENT ASSY. W/ SS-VITON HARDWARE	180°	-	X
F	-	80° DELTA "T" HEAT TRACING PACKAGE	0°	60"	-
G	-	2" THICK NOMINAL URETHANE FOAM INSULATION W/ GRAY MASTIC COATING	-	-	-

NOTES:
1 LOCATE FITTINGS FROM PLAN VIEW.
2 TANK(S) MUST BE INSTALLED PER ASSMANN CORPORATION USAGE & GUIDELINES.
3 FLEXIBLE EXPANSION JOINTS MUST BE USED ON ALL SIDEWALL CONNECTIONS.
4 TANKS ARE BUILT PER ASTM D 1998.

REV	REVISION DESCRIPTION	REV DATE
C	ADDED BUTTERFLY VAVLE TO MK (B)	10/12/12 MG
B	CHANGED MK (C) TO HAVING A 6" TEE INTERNALLY, CHANGED MK (D) FROM 3" TO 6", & CHANGED MK (E) FROM 4" TO 6"	10/10/12 MG
A	ADDED HALF NIPPLES & THREADED TEE'S TO MK (C), & (D)	9/17/12 MG

GROUND WATER

Assmann CORPORATION OF AMERICA
300 N TAYLOR ROAD
GARRETT, IN 46738
PHONE: (260) 357-3181
FAX: (260) 357-3738

RESIN USED: SCHULINK XL 350 CROSSLINK POLYETHYLENE

TANK DESIGNED SPECIFIC GRAVITY: 1.9 SP.G. MAX

TANK WEIGHT: 1600 LBS.

TANK COLOR: NATURAL

TITLE: ICT 5500 GALLON VERTICAL STORAGE TANK

DRAWN BY: M. GAMBLE | DRAWN DATE: 7/10/12 | SALES ORDER: 62908

DWG NUMBER: P-8439 | REV: C

KOESTER ASSOCIATES, INC.

ALL DIMENSIONS ARE IN INCHES AND ARE ±3%

THIS DRAWING IS INTELLECTUAL PROPERTY OF ISCO INDUSTRIES, LLC ("ISCO"). THIS IS INTENDED FOR THE MANUFACTURE, INSTALLATION, AND IDENTIFICATION OF THE PRODUCT DEPICTED AND SHALL NOT BE CIRCULATED OR REPRODUCED WITHOUT PERMISSION FROM AN AUTHORIZED AGEN OF ISCO. A CONTRACT FOR PERFORMANCE IS VALID ONLY UPON SIGNATURE FROM DULY AUTHORIZED AGENT OF YOUR COMPANY. THIS DRAWING IS A SPECIALTY MANUFACTURED PRODUCT, AND THEREFORE IS NON-RETURNABLE. ISCO COVENANTS THAT THIS PRODUCT IS FIT FOR A PARTICULAR PURPOSE AND HAS IMPLIED WARRANTY OF MERCHANTABILITY. THE USER OF THIS DRAWING ASSUMES AND RELEASES ISCO FROM ANY LIABILITY IN CONNECTION WITH THE PRODUCT.

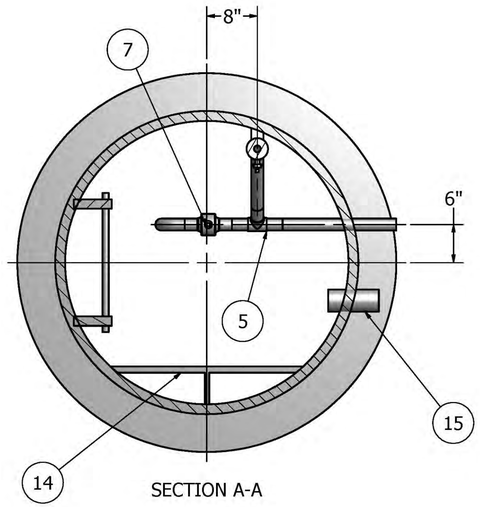

SECTION A-A

PARTS LIST			
ITEM	QTY	PART NUMBER	DESCRIPTION
1	1	29010012	HDPE BOTTOM RING FROM 1" SHEET 60" OD
2	6.5 ft	10483211	48" DR 32.5 HDPE PIPE
3	1	49489999	48" HDPE HINGED LID
4	1	53019999	1-1/2" CARBON STEEL MIPT TRANSITION
5	1	50011116	1-1/2" DR 11 MOLDED TEE
6	1	50011132	1-1/2" DR 11 MOLDED 45 DEGREE ELBOW
7	2	59019999	1-1/2" HDPE BALL VALVE
8	1	50011114	1-1/2" DR 11 MOLDED 90 DEGREE ELBOW
9	8 ft	10011141	1-1/2" DR 11 HDPE PIPE
10	1	53019999	1-1/2" THREADED CAP
11	2	29010012	HDPE PIPE SUPPORTS FROM 1" SHEET
12	6 ft	98000180	MANHOLE LADDER (MEETS OSHA STANDARDS)
13	2	53020092	HDPE LIFTING LUG
14	1	29010012	HDPE MOUNTING STRIP FROM 1" SHEET 3" TALL. STARTS 6" OFF ID OF MANHOLE
15	1 ft	10031712	3" DR 17 HDPE PIPE

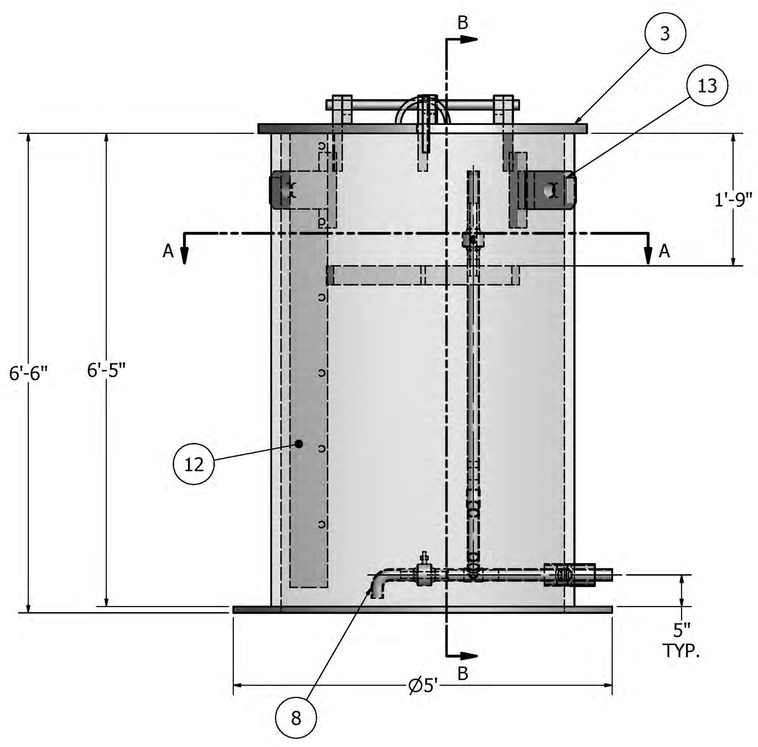

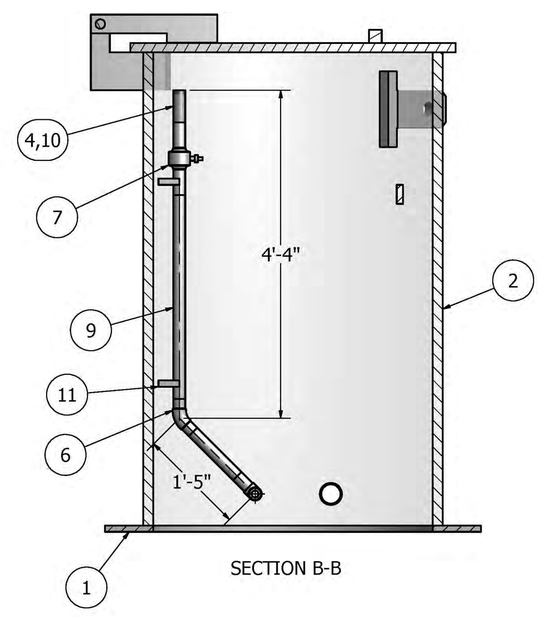

SECTION B-B

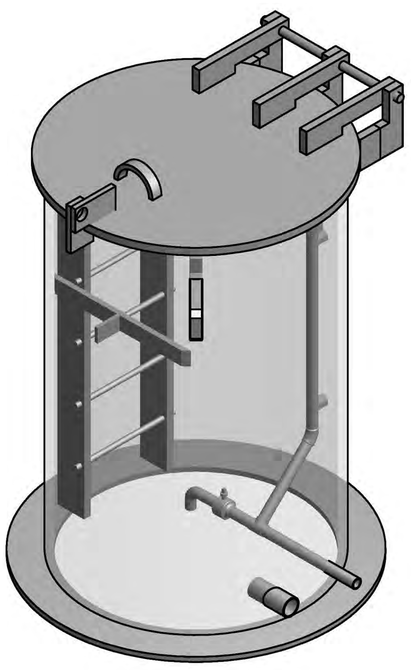

ISCO INDUSTRIES

CUSTOMER NAME: ARCADIS			
DRAWING TITLE: 48" HDPE MANHOLE			
DRAWN: NLA	4/20/2012	SIZE: D	FILE LOCATION: DF/SE/ARCADIS-042012
TERRITORY REPRESENTATIVE: SCOTT EATON			REV #/ DATE: 4(082812)
DRAWING #		SCALE	SHEET 1 OF 1

APPROVED BY: DATE

NON-CONTROLLED COPY

INFORMATION SUBJECT TO CHANGE WITHOUT NOTICE

VERIFY REV LEVEL OF PAPER COPY WITH REV LEVEL ON PPC WEB SITE

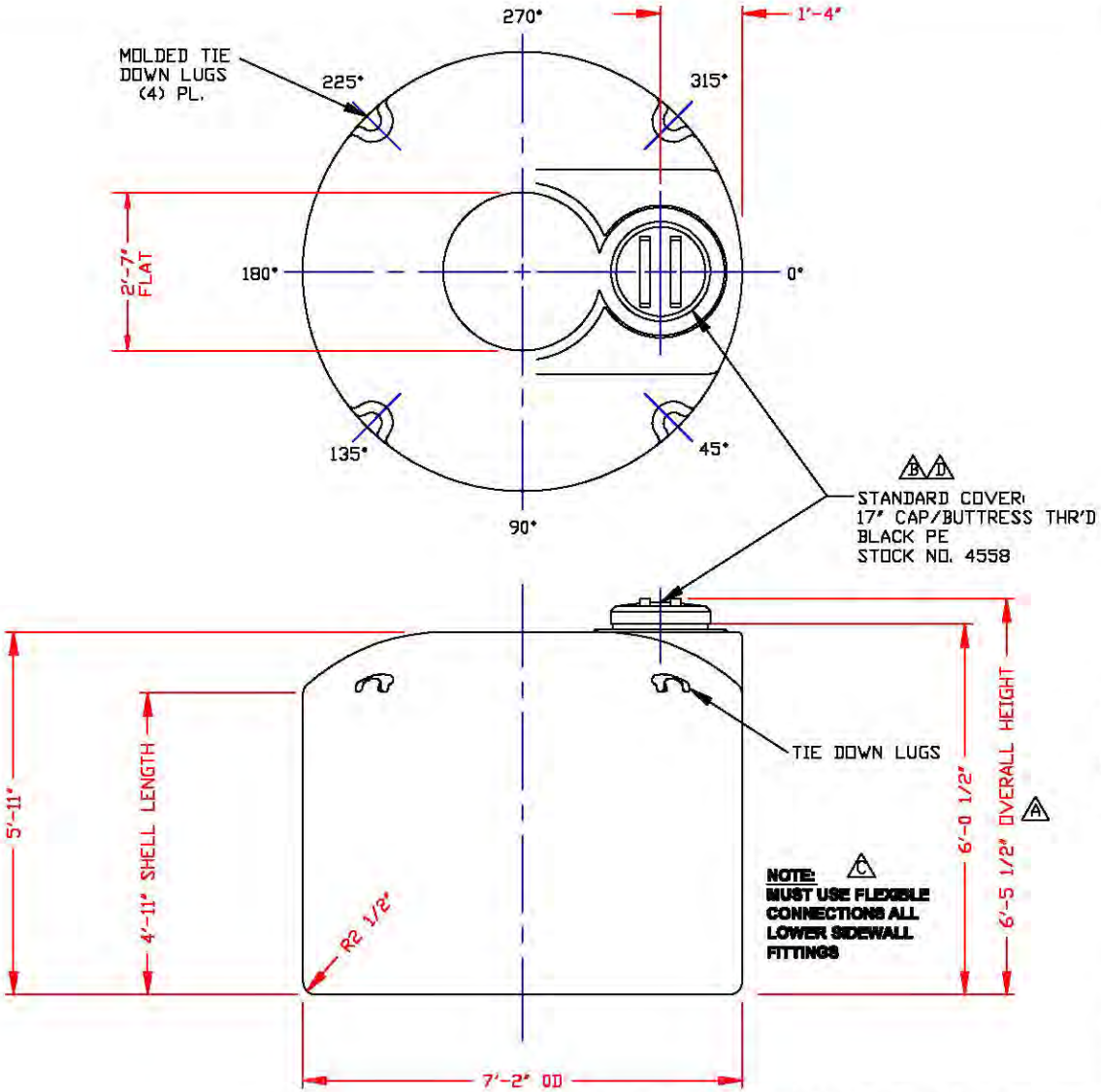

NOZZLE SCHEDULE & ACCESSORIES

SERVICE	MK	STOCK NO.	SIZE	FITTING	DEG	ELEV

NOTES:

1. THIS IS A COMPUTER GENERATED DWG. DO NOT REVISE BY HAND.
2. DIMENSIONS WILL VARY ±3% DUE TO VARIATIONS IN MULTIPLE MOLDS & CONDITONS PREVALENT DURING MANUFACTURE & USAGE.
3. MOLDED IN GALLONAGE MARKERS IN MANWAY AREA IN 100 GALLON INCREMENTS UP TO 1600 GALLONS.

CALCULATED CAPACITIES/ VOLUME IN U.S. GALLONS		
DESIGN CAP	DOME VOL	TOTAL VOL
1464	147	1611

CONFIDENTIAL PROPERTY OF POLY PROCESSING COMPANY NOT FOR REPRINT OR USE WITHOUT PERMISSION

REV			
"D"	REVISED COVER	BY:JB 7/23/09	CK:WM
"C"	ADDED FITTING NOTE	BY:MBW 2/17/03	CK:JB
"B"	REVISED LID	BY:MBW 2/17/03	CK:JB
"A"	ADDED DIMENSION	BY:JB 10/16/02	CK:MBW

DWG TITLE: 1450 GALLON UPRIGHT TANK

SCALE: 1/2"=1'-0"

DATE: 9/22/99

POLYPROCESSING COMPANY LLC

Central Region
P.O. Box 4159 (71819)
2201 Old Sterlington Rd.
Monroe, LA 71203
(318) 343-7369
FAX (318) 343-8798

DR: MB WILKERSON

CK: D. RECTOR

SHEET: 1 OF 1

COMPUTER FILE: 1001450

REV: D

B-5

AS-D+

PSA Oxygen Generator

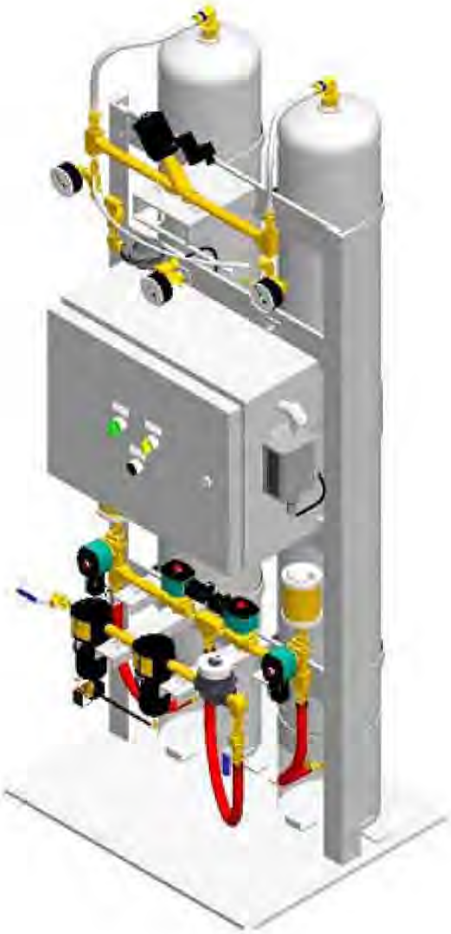

The World's Largest Manufacturer of PSA Oxygen Systems!

Features

- Produces oxygen from compressed air
- Microprocessor controlled
- Low operating cost
- Automatic and unattended operation
- Easy to install and maintain

Typical Applications

- Ozone (Generator) Feed Gas
- Waste/Water Treatment
- Thermal/Chemical Oxidation
- Cutting/Brazing/Soldering
- Environmental Remediation
- Glass Work/Manufacturing/Blowing
- Fish Farming
- Hospital Systems

The Pressure Swing Adsorption (PSA) Oxygen Generating Process

Air contains 21% oxygen, 78% nitrogen, 0.9% argon, and 0.1% other gases. AirSep Oxygen Generating Systems separate oxygen from compressed air through a unique Pressure Swing Adsorption (PSA) process. The PSA process uses molecular sieve (a synthetic zeolite), which attracts (adsorbs) nitrogen from air at high pressure and releases (desorbs) it at low pressure. AirSep Oxygen Generators use two vessels filled with molecular sieve as adsorbers. As compressed feed air flows through one of the vessels, the molecular sieve adsorbs nitrogen. The remaining oxygen passes through the vessel and exits as the product gas. Before the adsorber becomes saturated with nitrogen, the feed air is diverted to the second vessel. At that point, the sieve in the first vessel regenerates by desorbing the nitrogen through depressurization and purging it with oxygen from the second vessel. This process is then repeated in the second vessel to complete a cycle that allows the oxygen generator to deliver a constant flow of product oxygen at 90% minimum purity. Under normal operating conditions, the molecular sieve is completely regenerative and will last indefinitely.

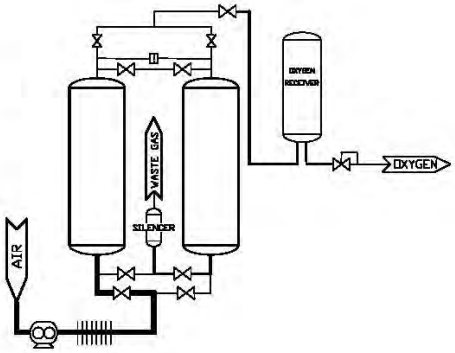

AS-D+

PSA Oxygen Generator

For additional information, call Toll-Free U.S./Canada:
1-800-320-0303

Specifications

Product Characteristics

Product Flow: 80 - 100 SCFH (2.10 - 2.63 Nm^3/hr)[1]
[1]*Factory set to your specific requirements.*
Standard Product Pressure: 45 psig (3.10 barg)[2]
[2]*Pressures up to 65 psig (4.48 barg) available. Refer to chart for air requirement.*
Product Purity: 93% Nominal
Product Dew Point: -100°F (-73°C)

Ambient Operating Conditions

Locate the oxygen generator in a well-ventilated area that is protected from weather elements and remains between 40°F (4°C) and 112°F (44°C)

Feed Air Requirements

Flow Rate: ***Refer to chart.***
Clean and Dry "Plant Air" (Class 5.6.5 per ISO 8573.1)
Pressure: 90 psig (6.21 barg) minimum
Temperature: 122°F (50°C) maximum

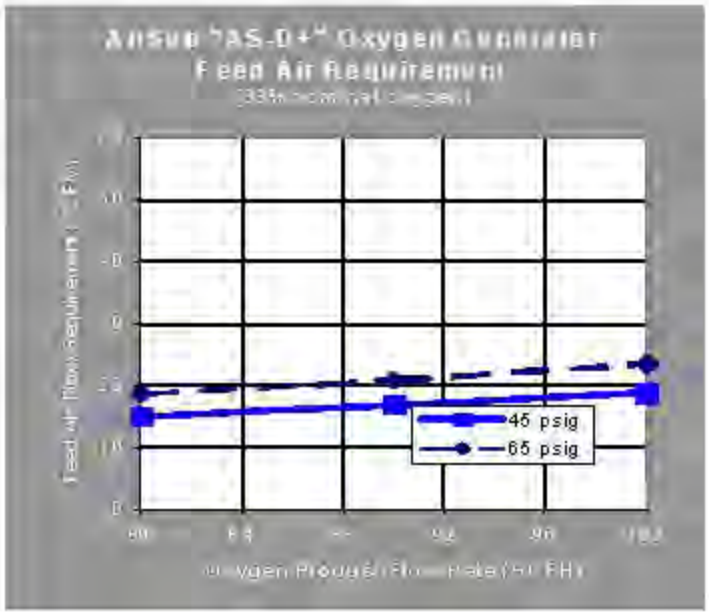

Control Power Requirements

120 V ~ ±10%, 50/60 Hz, Single Phase, 1.0 A
240 V ~ ±10%, 50/60 Hz, Single Phase, 0.5 A

Physical Connections

Compressed Air Inlet: 1/4" NPT x 3/8" NPSM
Product Gas Outlet: 1/4 NPT/B size oxygen adapter

Certifications and Approvals

NRTL certified compliance to UL3101.1, CSA, CE

Warranty: 1 Year Parts and Factory Labor*

Dimensions			Weight
	in	cm	529 lb. (240 kg)
A	70	178	
B	27	69	
C	22	56	

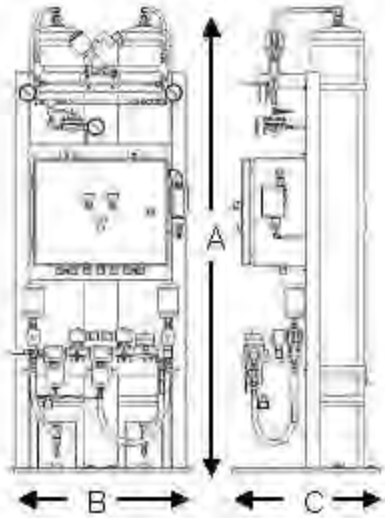

*An unprotected or inadequately ventilated environment, improper feed air quality, or improper control power may cause damage to the oxygen generator not covered under warranty.

AirSep Corporation continually improves its products and reserves the right to change specifications or design without notice.

Commercial Products Division
260 Creekside Drive
Buffalo, NY 14228-2075 U.S.A.
Tel: (716) 691-0202
Fax: (716) 691-1255
URL: http://www.airsepcpd.com
E-mail: cpd@airsep.com

Copyright® 2010, AirSep Corporation

NOTES:

1.) DIMENSIONS SHOWN ARE IN INCHES [MILLIMETERS].

2.) DRAWING DOES NOT SHOW ALL DETAILS.

3.) CONTROL PANEL CONFIGURATION VARIES WITH EACH OPTION.

4.) VOLTAGE ON UNITS WILL EITHER BE 110/120V OR 220/240V.

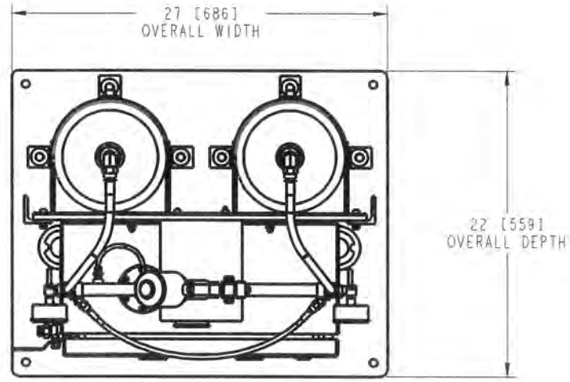

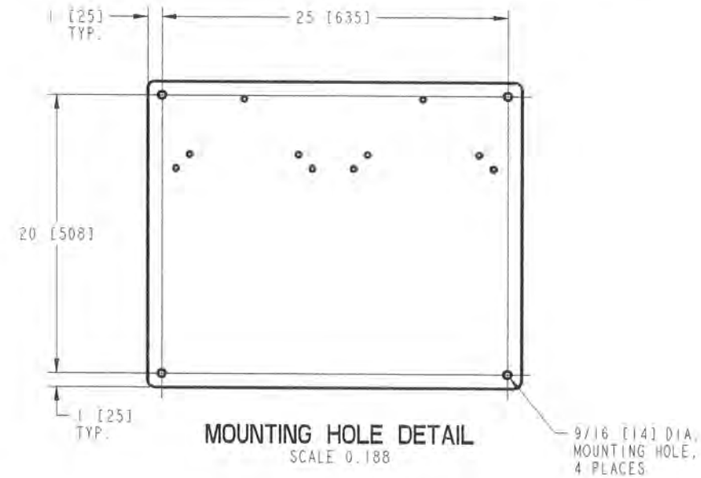

MOUNTING HOLE DETAIL
SCALE 0.188

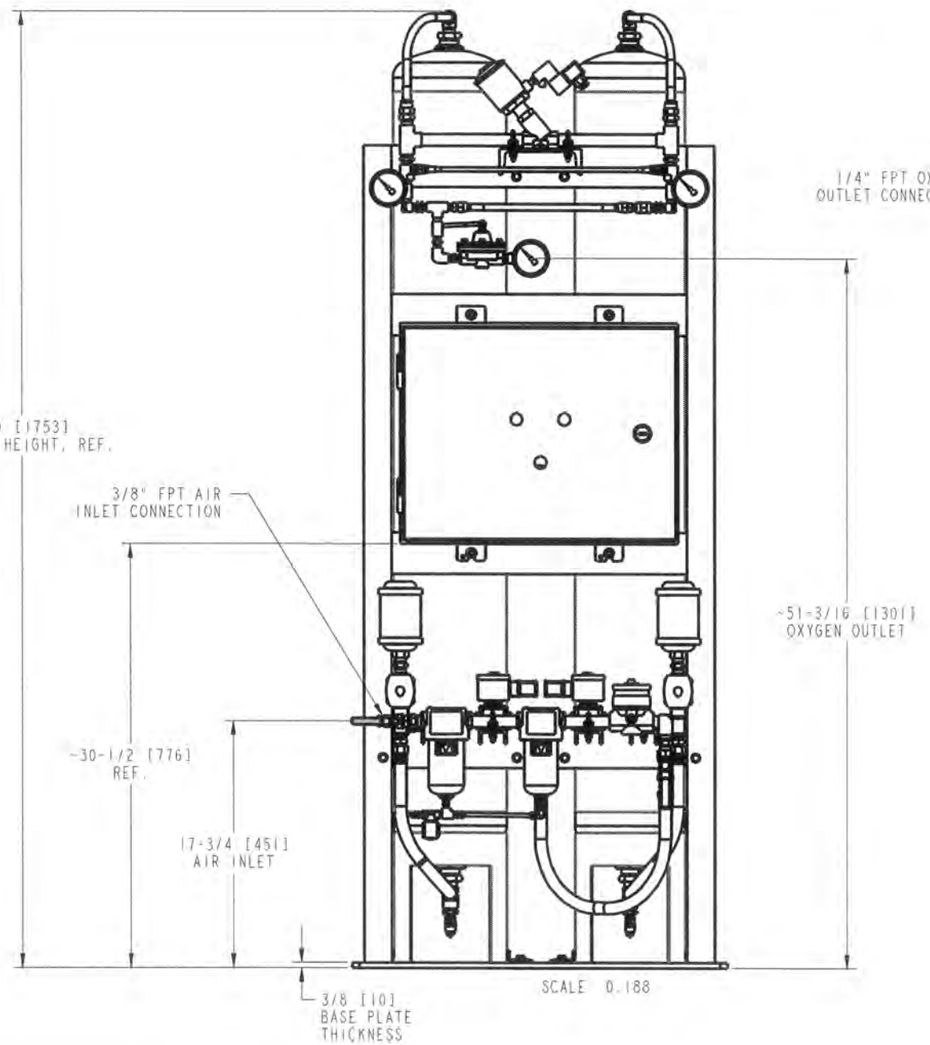

SCALE 0.188

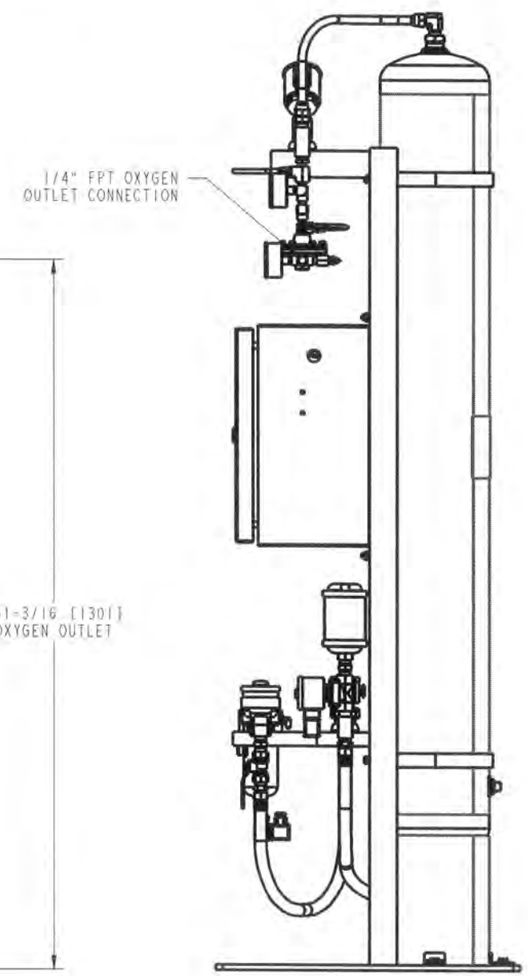

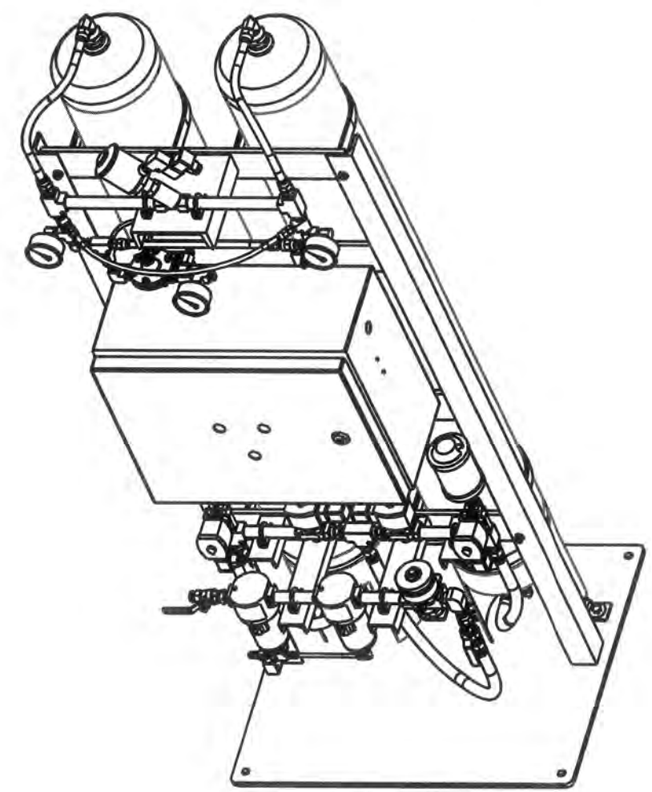

SCALE 0.188

REV	REVISION	ECN #	BY	DATE	APPD
A	RELEASED UNDER ISO	09C-104	S.P.M.		

APPROVAL	DATE
DRAWN S.P.M.	04/15/09
ENGR:	
CHECKED:	
MATERIAL: SEE BOM	

UNLESS OTHERWISE SPECIFIED
- DO NOT SCALE DRAWING
- DIMENSIONS ARE IN INCHES
- DIMENSIONS APPLY AFTER PLATING OR COATING
- THREADS IAW FED-STD-H28
- REMOVE ALL BURRS

TOLERANCES:
- SURFACES +/-.125
- DRILLED HOLES +/- .125
- HOLES Ø .035 MAX
- EDGES BREAK 0.020 MAX
- ANGULARITY +/- 0°30'
- FORMED: ±1°
- CHAMFERS: 1 Ø/2
- X.X ±.1
- X.XX ±.02
- X.XXX ±.005
- FRACTION ±1/32

AIRSEP® CORPORATION
Buffalo, New York 14228

TITLE: AIRSEP, AS-D+, 80-100 SCFH OXYGEN GENERATOR

PART NO	DWG NO	REV
AS097-X	AS-D-PLUS	A
SIZE D	SCALE 1.000	SHEET 1 OF 2

THIS DOCUMENT IS PROPRIETARY INFORMATION. DO NOT COPY, REPRODUCE OR DISTRIBUTE WITHOUT THE EXPRESS WRITTEN CONSENT OF AIRSEP

NOTES:

1.) DIMENSIONS SHOWN ARE IN INCHES [MILLIMETERS].

2.) TEFLON TAPE TO BE APPLIED TO ALL FITTINGS PRIOR TO INSERTION INTO TANK.

3.) 1/4" PLUGS ARE USED FOR SHIPPING PURPOSES ONLY.

4.) TOTAL WEIGHT OF TANK ASSEMBLY IS APPROX. 146 LBS [66 Kg].

5.) PALLET (NOT SHOWN) IS USED FOR SHIPPING PURPOSES ONLY.

BILL OF MATERIAL				QTY
ITEM	DESCRIPTION	A.S. PART NO	U/M	—1
1	FITTING, BRASS, PLUG, 1/4 NPT, HEX HEAD	F0048-2	EA	2
2	FITTING, BRASS, BUSHING, 1 NPT X 1/4 FPT	F0008-1	EA	2
3	TANK, 80 GALLON, 185 PSI, 30 DIA, PAINTED, O2 CLEANED	TA008-1	EA	1
4	PACKAGING, PALLET, 39-1/2"L x 27-1/2"W (SEE NOTE 5)	PA054-1	EA	1

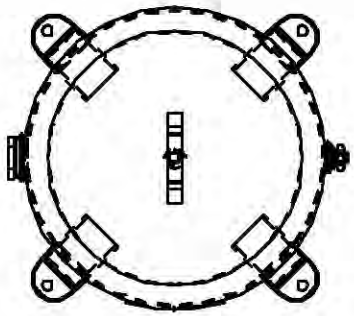

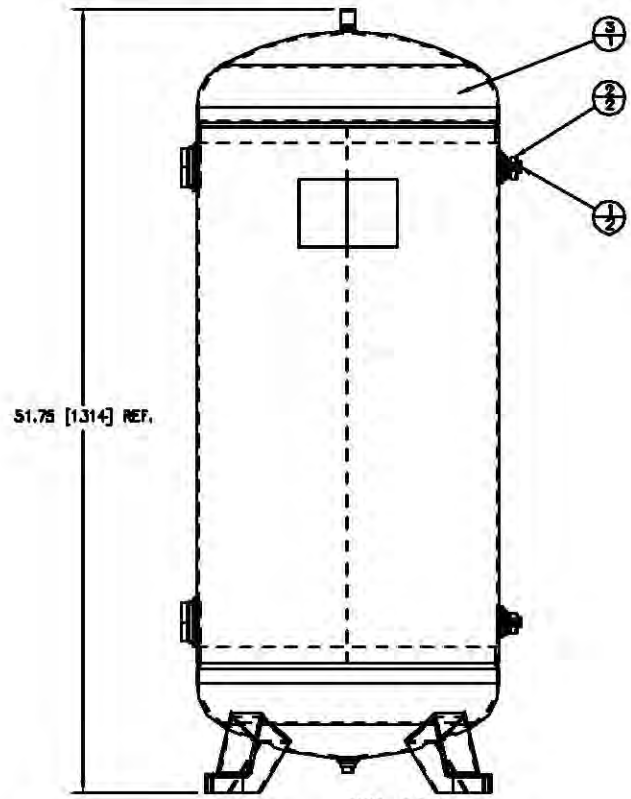

SCALE 0.250

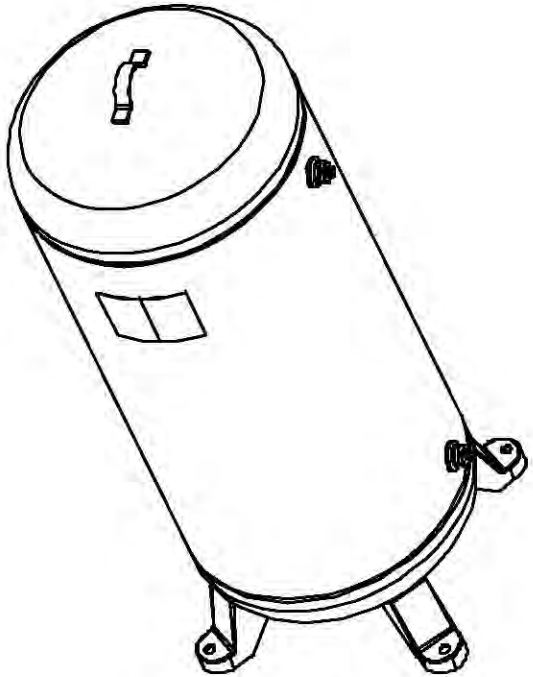

SCALE 0.250

DRAWING SUBJECT TO CHANGE WITHOUT NOTICE

REV	REVISION	ECN #	BY	DATE	APP'D

TANK ASSY, 80 GALLON, WITH 1/4 FPT BUSHINGS	
TA019-1	TA019	B
D	1.000	SHEET 1 OF 1

Oxygen Generator T-800 Tank 1

Oxygen Generator T-800 Tank 2

Oxygen Receiving Tank T-900

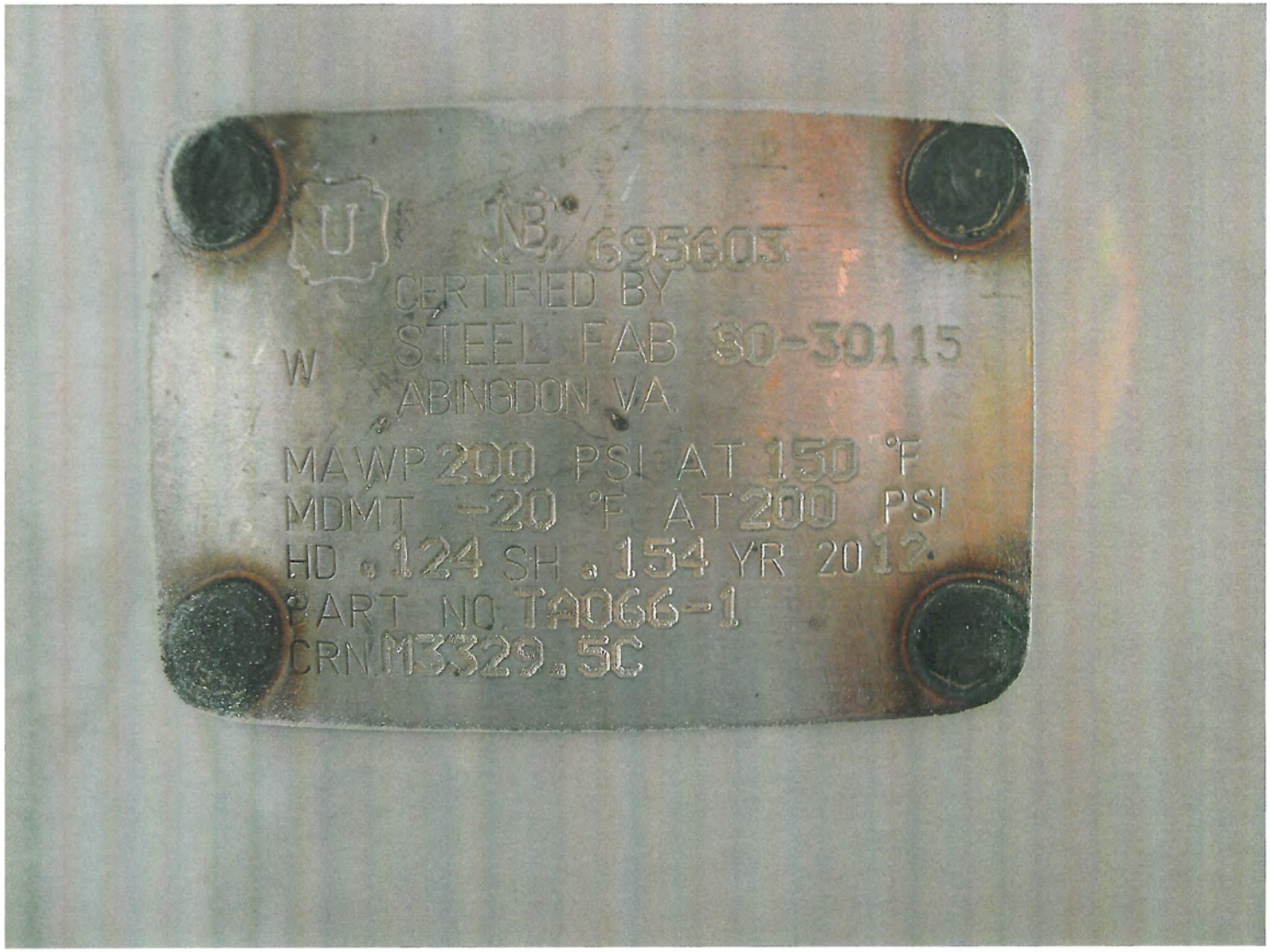

KAESER COMPRESSORS

Built for a lifetime.™

Complete Compressed Air Systems

AIRCENTER™

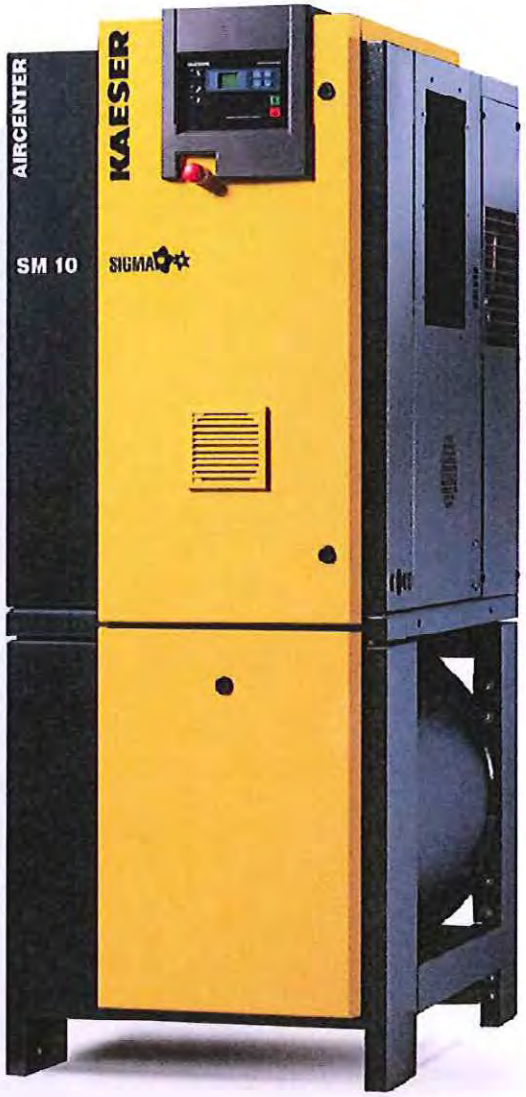

Life Just Got Easier

If you are like most air compressor owners, you need a reliable source of clean, dry air that you do not have to think about on a daily basis. You have enough to do without designing and then installing a new compressed air system. To help keep things simple, Kaeser offers a complete compressed air system: the AirCenter™

The integrated AirCenter design reduces time spent in planning and purchasing your air system. We combine the reliability, energy efficiency and easy-to-service design of our industrial rotary screw compressors with a storage tank, and clean air treatment equipment. AirCenters are completely assembled and their compact design saves you precious floor space. They arrive wired and plumbed for fast and easy installation, saving you a lot of time and expense in installation.

AirCenters are available in simplex and duplex compressor configurations from a single 5 hp to twin 30 hp units, with pressures from 80 to 200 psig, and flows from 12 to 248 cfm. With so many models, we have the AirCenter to meet your specific needs.

No matter what size or configuration, our AirCenters offer tremendous value. The small footprint and super-quiet operation let you place the system almost anywhere, while the energy efficiency, easy maintenance and Kaeser durability offer the lowest possible life cycle cost.

Configurations To Suit Your Space

Duplex in end-to-end configuration for narrow aisles or against a wall

Duplex in corner arrangement

Duplex back-to-back arrangement for room center installation

***NOTE:** These diagrams show AS Series AirCenters. Duplex SK AirCenters may also be configured as shown. Both SK and AS duplex systems include a connection piping kit.*

A Complete System

Kaeser AirCenters are the answer to many challenges. The integrated design makes installation easy and inexpensive. Simply connect the electrics and system piping and you are ready to go. The compressor and dryer are easily accessible for preventive maintenance. The compact design and super-low noise and vibration offer superior flexibility when selecting the installation location. Each system is factory-engineered to ensure all components are properly sized, and Kaeser offers AirCenters in both simplex and duplex configurations. Duplex models offer added energy efficiency by running only the compressor(s) needed to meet the current demand. They also offer back-up capability.

Duplex system

Built for a Lifetime

Kaeser AirCenters match Kaeser's industrial rotary screw compressors and high-efficiency refrigerated dryers with ASME or CRN storage receivers. All these components are mounted on a heavy-gauge frame. The result is a rock-solid package that offers many years of reliable service.

Complete Compressed Air System

Not Shown:

4 Filter located behind dryer

5 Drains for dryer and tank

1 Rotary Screw Compressors

Each Kaeser AirCenter is built around our industrial Sigma rotary screw compressor. These compressors offer the best combination of superb reliability, high air quality, low lifecycle costs. The cabinet design provides quiet operation and easy access for service.

Kaeser's rotary screw compressors feature the proprietary Sigma Profile which produces more air per kilowatt than other rotor designs. You get higher flows with lower energy bills.

2 Refrigerated Air Dryers

Refrigerated air dryers are essential for most applications, and that's why they are standard on all AirCenters. Whether they are integral to the compressor cabinet (as shown above) or deck-mounted next to the compressor, the dryer on a Kaeser AirCenter has been selected to match the output of the compressor. We use smooth-tube heat exchangers with non-fouling surfaces to reduce pressure drop. Dryers have built in moisture separators and automatic condensate drains.

3 Air Receivers

Receiver tanks play a vital role in your air system, and that is why every AirCenter has one. They separate bulk liquids from the air stream, reduce compressor cycling and store air for intermittent volume demands without a drop in system pressure. AirCenter tanks are ASME coded and include a properly sized safety relief valve and pressure gauge.

Optional Clean Air Treatment Package

Compressed air quality is critical for many applications. The optional Clean Air Treatment Package will ensure your system delivers consistently high quality air. It includes both a KOR coalescing oil removal filter and the Eco-Drain automatic condensate drain.

4 Coalescing Air Filter

The Clean Air Treatment Package includes the high performance KOR coalescing filter. KOR filters remove 99.99% of any residual oil liquids and aerosols, resulting in an exceptionally low carry-over of 0.01ppm w/w. They consistently remove particles such as dust, dirt, and rust and meet ISO Class 1 for particles. This level of air quality is suitable for nearly any application, including media blasting, spraying expensive finishes, and operating expensive production machinery. The filter includes an internal drain and differential pressure gauge to indicate when to change the filter element.

5 Electronic Demand Drain

All AirCenters come standard with one Eco-Drain for the dryer (and on the receiver with the optional Clean Air Treatment Package). The Eco-Drain automatically removes liquid contaminants from the tank without wasting valuable compressed air.

Other Options

Kaeser Condensate Filter

The Kaeser Condensate Filter automatically removes lubricant from compressor condensate. This allows for easy and economical disposal of compressed air condensate in an environmentally responsible way. The low-maintenance system requires no electricity for operation.

Energy Saving Dryer

For additional energy savings, some models are available with the Secotec cycling refrigerated dryer.

Variable Frequency Drive

Several models are also available with integral Sigma Frequency Control variable speed drive for the ultimate in energy savings.

Single compressor (Simplex) and dual compressor (Duplex) AirCenters

Model	Compressor Horsepower		Operating Pressure[1] (psig)	Capacity (cfm)[2]	
	Simplex	Duplex		Simplex	Duplex
SX 5 AirCenter[3]	5	2 x 5	125	21	42
			150	17	34
SX 7.5 AirCenter[3]	7.5	2 x 7.5	125	28	56
			150	24	48
SM 7.5 AirCenter[3]	7.5	2 x 7.5	125	32	64
			150	26	52
SM 10 AirCenter[3]	10	2 x 10	125	42	84
			150	35	70
SM 15 AirCenter[3]	15	2 x 15	125	53	106
			150	44	88
SK 15 AirCenter[3]	15	2 x 15	125	71	142
			150	59	118
SK 20 AirCenter[3]	20	2 x 20	125	88	176
			150	77	154
AS 20 AirCenter	20	2 x 20	125	92	184
			150	77	154
AS 25 AirCenter	25	2 x 25	125	111	222
			150	94	188
AS 30 AirCenter	30	2 x 30	125	124	248
			150	104	208
SFC 8 AirCenter	10	N/A	125	48	N/A
			150	41	
SFC 11 AirCenter	15	N/A	125	72	N/A
			150	63	
SFC 15 AirCenter	20	N/A	125	95	N/A
			150	83	
SFC 18S AirCenter	25	N/A	125	113	N/A
			150	97	

[1] Higher pressures available upon request. Please consult factory.
[2] Performance rated in accordance with CAGI/PNEUROP PN2CPTC2 test code.
[3] Available with optional energy-saving Secotec cycling dryer.

Specifications are subject to change without notice.

KAESER COMPRESSORS

Built for a lifetime.™

www.kaeser.com

Kaeser Compressors, Inc.
511 Sigma Drive
Fredericksburg, VA 22408 USA
Telephone: 540-898-5500
Toll Free: 800-777-7873
info.usa@kaeser.com

Kaeser Compressors Canada Inc.
3760 La Verendrye Street
Boisbriand, QC J7H 1R5 CANADA
Telephone: (450) 971-1414
Toll free: (800) 477-1416
info.canada@kaeser.com

Kaeser Compresores de México S de RL de CV
Calle 2 #123
Parque Industrial Jurica
76100 Querétaro, Qro.
Telephone: 01 (442) 218 64 48
sales.mexico@kaeser.com

Kaeser Compresores de Guatemala y Cia. Ltda.
Calz. Atanasio Tzul 21-00, zona 12
El Cortijo II, Bodega 501
01012–Guatemala City
Telephone: +502 2412-6000
info.guatemala@kaeser.com

© 2011 Kaeser Compressors, Inc. All rights reserved. 10/11
USAIRCENTER

INSTALLATION DATA SHEET

KAESER COMPRESSORS

Doc. No.: TI.IDS-033
Version: 2.1

SM -T SERIES

Date: 10-06-10

MODEL	SM 7.5T	SM 10T	SM 15T
COOLING DATA:			
Cooling System Available	A / C	A / C	A / C
Standard Ambient Temp. Range [F]	40 - 115	40 - 115	40 - 115
VENTILATION OF COMPRESSOR ROOM			
Air Inlet opening [sq. ft.] [Z]	2.7	3.2	3.8
OPTIONS:			
Cooling Fan Capacity [cfm] (forced ventilation with exhaust fan)	2,001	2,295	2,707
Internal Cooling Fan Capacity [cfm] (exhaust air used for space heating)	1,707	1,707	1,707
oil & air coolers | motor | dryer	1,001 | 294 | 412	1,001 | 294 | 412	1,295 | 353 | 471
Max. Additional Pressure Drop for Ducts [inch Water Column]	1/8	1/8	1/16
Typical Heat Rejected [BTU / HR]	23,713	32,685	42,619
Recommended Heating Duct (W x H) [in]	9 7/8 x 24 3/4	9 7/8 x 24 3/4	9 8/7 x 24 3/4
	no duct for the dryer	no duct for the dryer	no duct for the dryer
CONNECTIONS [in.]:			
Air Discharge [NPT]	3/4	3/4	3/4
Power Input Conduit Opening(s)	1 5/8	1 5/8	1.5/8
Condensate Drain [NPT]	1/4	1/4	1/4
NOISE LEVEL DATA: [Measured in dB(A) according to ISO 2151 using ISO 9614-2]			
A/C w/Standard Cabinet	66	67	67
ENVELOPE DIMENSIONS & WEIGHT			
Length [in.]	24 3/4	24 3/4	24 3/4
Width [in.]	42 1/4	42 1/4	42 1/4
Height [in.]	43 3/8	43 3/8	43 3/8
Floor Space [sq. ft.]	7.3	7.3	7.3
Weight [lbs]	606	628	650
Estimated Shipping Weight [lb]	657	679	701
ELECTRICAL DATA:			
NEMA Nominal Efficiency [%]	89.5%	89.5%	90.2%
DRYER:			
Fan Motor Enclosure Type	TEAO (Totally Enclosed Air Over) (IP 44)	TEAO (Totally Enclosed Air Over) (IP 44)	TEAO (Totally Enclosed Air Over) (IP 44)
Input kW for Complete Dryer	0.36	0.36	0.45
Full Load Amps [FLA] @208V/3ph/60 Hz	3.5	3.5	4.1
Full Load Amps [FLA] @230V/3ph/60 Hz	3.2	3.2	3.7
Full Load Amps [FLA] @460V/3ph/60 Hz	1.6	1.6	1.9
Full Load Amps [FLA] @575V/3ph/60 Hz	1.3	1.3	1.5
Package Full Load Amps @ 208V/3ph/60 Hz/YD [FLA]	25	33	45
Package Full Load Amps @ 230V/3ph/60 Hz/YD [FLA]	23	31	42
Package Full Load Amps @ 460V/3ph/60 Hz/YD [FLA]	11	15	21
Package Full Load Amps @ 575V/3ph/60 Hz/YD [FLA]	9	13	17
Drive Motor Full Load HP	7.5	10	15
Total Package Full Load HP	7.5	10	15
Drive Motor Insulation Class	F	F	F
Drive Motor Enclosure Type	TEFC	TEFC	TEFC
Control Cabinet Class [NEMA]	12	12	12
Continuous Duty [Hours / Day]	24	24	24
START-UP DATA:			
Drive Motor Overload Set Point [A] @ 208V/3ph/60Hz/YD	14	19	27
Drive Motor Overload Set Point [A] @ 230V/3ph/60Hz/YD	13	18	25
Drive Motor Overload Set Point [A] @ 460V/3ph/60Hz/YD	6	9	13
Drive Motor Overload Set Point [A] @ 575V/3ph/60Hz/YD	5	7	10

Copyright 2010 Kaeser Compressors, Inc.

INSTALLATION DATA SHEET

Doc. No.: TI.IDS-033 Version: 2.1	SM -T SERIES	Date: 10-06-10

MODEL	SM 7.5T	SM 10T	SM 15T
Start Timer Set-Point [sec]	6	6	6
Idle Timer Set-Point [min]	4	4	4
Recommended Disconnect Fuse Size [Amps] @ 208V/3ph/60Hz/YD *	35	45	60
Recommended Disconnect Fuse Size [Amps] @ 230V/3ph/60Hz/YD *	30	45	60
Recommended Disconnect Fuse Size [Amps] @ 460V/3ph/60Hz/YD *	15	20	30
Recommended Disconnect Fuse Size [Amps] @ 575V/3ph/60Hz/YD *	10	15	25
Recommended Disconnect Wire Size [AWG/kcmil] @ 208V/3ph/60Hz/YD **	8	6	4
Recommended Disconnect Wire Size [AWG/kcmil] @ 230V/3ph/60Hz/YD **	8	6	4
Recommended Disconnect Wire Size [AWG/kcmil] @ 460V/3ph/60Hz/YD **	14	12	8
Recommended Disconnect Wire Size [AWG/kcmil] @ 575V/3ph/60Hz/YD **	14	14	10
OIL SYSTEM DATA:			
Oil System Capacity [gal.]	1.1	1.1	1.1
Typical Oil Consumption [fl. oz./100 h]	1.3	1.7	2.2
MAINTENANCE PARTS:			
Air Inlet Filter	6.4212.0	6.4212.0	6.4212.0
Filter Mat	5.3353.0	5.3353.0	5.3353.0
Filter Mat for Control Cabinet	6.3572.0	6.3572.0	6.3572.0
Fluid Filter	6.3462.0	6.3462.0	6.3462.0
Fluid Separator Kit	6.3795.0	6.3795.0	6.3795.0
Maintenance Kit for Optional 5-year Warranty	AN5YRKTSM2	AN5YRKTSM2	AN5YRKTSM2
Maintenance Kit for Optional 5-year Warranty, with food-grade lubricant	AN5YRKTSM2F	AN5YRKTSM2F	AN5YRKTSM2F

1. Electrical data may vary in accordance with motor manufacturer's specifications. Motors are EPACT compliant.
   Main power supply and overcurrent protection must be installed by a qualified electrician in accordance with NEC, OSHA, and any applicable local codes.

* Dual-element time-delay fuse; based on 2008 NEC 240.6, 430.52, and Tables 430.52, 430.248,and 430.250.

** Based on 2008 NEC 110.14(C), 220.3, 310.15, Table 310.16, 430.6, 430.22, 430.24 and Tables 430.248 and 430.250.
Multi-strand copper core wire at 40° C ambient temperature, with 60° temperature rating, and an insulation rating of 90° C.

Copyright 2010 Kaeser Compressors, Inc.

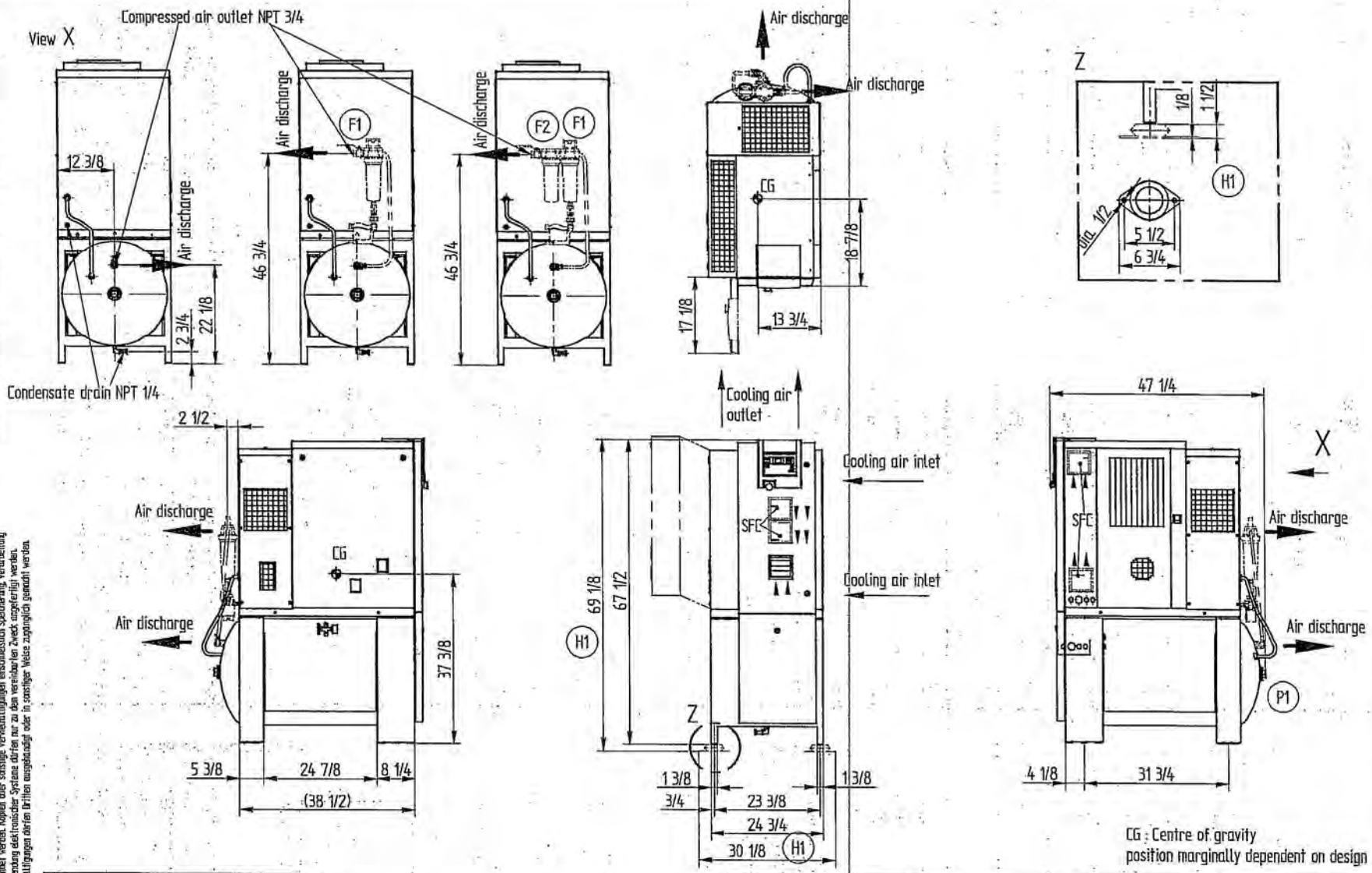

CG : Centre of gravity
position marginally dependent on design

Option	Code
Machine mountings	H1
Air cooling	K1
Buffer tank	P1
mikrofilter	F1
activated carbon filter	F2

All dimensions are in inches!

ATTENTION!
Allow 4" clearance in narrow passages and doorways
Crating has not been considered.

	Tag	Name
Gez.	15.11.06	Dumdey
Gepr.		
Freigeg.	16.11.2006	Schubart, P.
Maßstab		

Aircenter SFC 8 (K1)
Aircenter SM 7.5/10/15

Ersatz für

KAESER KOMPRESSOREN

T10774.00 use

A-Index 05

Die Zeichnung bleibt unser ausschließlicher Eigentum. Sie wird nur zu dem vereinbarten Zweck verwendet und darf zu keinem anderen Zweck verwendet werden. Kopien oder sonstige Vervielfältigungen einschließlich Speicherung, Verarbeitung oder Verbreitung unter Verwendung elektronischer Systeme dürfen nur zu dem vereinbarten Zweck angefertigt werden. Weder Original, noch Vervielfältigungen dürfen Dritten ausgehändigt oder in sonstiger Weise zugänglich gemacht werden.

Entwicklungsbedingte Änderungen vorbehalten. Zeichnung darf nur über CAD geändert werden.

KAESER COMPRESSORS

AIRCENTER SIMPLEX AND DUPLEX CONFIGURATIONS WITH INTEGRAL DRYER (SM – AS)

KAESER MODEL SM-7.5 AIRCENTER , 7.5 HP, 32 CFM-FAD AND 125 PSIG

SPECIFICATIONS

A. Rotary Screw Compressor(s)

1. Air compressor shall be a single-stage, oil-flooded, air-cooled rotary screw compressor completely pre-piped and with pre-wired control panel. Compressor shall be Kaeser Compressors, Inc., model SM-7.5 Aircenter or pre-approved equivalent.

2. Compressor shall be manufactured under strict ISO 9001:2000 quality control standards.

3. Compressor shall be tested as a completely assembled, piped, and wired unit.

4. Total package capacity shall be 32 cfm free air delivery at a discharge pressure of 125 psig. Compressor shall be capable of continuous, full-flow operation 24 hr./day at rated capacity and pressure.

5. Motor voltage shall be 208/230/460 V, 3 phase, 60 Hz with single-point hook-up incorporating the dryer. The compressor package shall be available with a tri-voltage motor which can be re-wired in the field. Control system voltage shall be 115 V, 1 phase, 60 Hz.

6. Standard compressor package shall be suitable for use in a 40°F to 115°F ambient temperature range.

7. Compressor shall have integral refrigerated dryer with moisture separator.

8. Package shall be available with optional Kaeser Oil Removal (KOR) filter and automatic condensate drain.

B. Airend(s)

1. Rotors - Airend rotors shall have a Sigma profile. Rotors shall be precision-machined from cast iron. Airend drive shaft to be tapered for easy removal of airend pulley. All cast parts shall be 100% inspected for compliance with design tolerances in accordance with ISO 9001:2000 quality procedures.

2. Casing - Airend casing shall be cast iron construction.

3. Bearings - Airend rotors shall be supported on both ends by cylindrical roller bearings to carry radial loads. Angular contact ball bearings shall be installed on the discharge end of each rotor to carry thrust loads with minimal friction.

C. Drive Motor(s)

1. Motor shall have TEFC enclosure.
2. Motor winding shall be 100% copper (aluminum not acceptable) and designed for full-voltage starting.
3. Motor service factor shall be a minimum of 1.10.
4. Motor speed shall be 3600 rpm.
5. Motor insulation shall be Class "F" (Class "B" not acceptable).
6. Motor efficiency shall be 89.5 % or higher.

D. Starter(s)

1. Starter(s) shall be magnetic, wye-delta, reduced voltage starter(s), to ensure low starting current and reduce thrust-bearing loads.
2. Starter shall be integrally mounted and wired in the compressor package, and located in control enclosure.

E. Drive(s)

1. Drive shall be multi-ribbed, single belt drive for flexibility and ease of maintenance.
2. Drive shall include automatic V-belt tensioning device with visual adjustment indicator to maintain proper tension on the V-belts, prolong belt life, and maintain efficient power transfer from the motor to the airend.
3. Belt shall be 100% oil-resistant.

F. Control Cabinet(s)

1. Control cabinet shall have NEMA 12 protection.
2. Electrical components shall be UL and/or CSA approved and labeled as required.
3. Electrical schematic diagram shall be included in the service manual for ease of reference.
4. Cabinet backplate shall be galvanized for improved grounding.

G. Compressor Instrument Panel(s)

1. Instrument panel shall consist of a Sigma Control Basic™ system, or an approved equal. Control system shall be suitable for use in a –4°F to +140°F ambient temperature range. Control system shall meet or exceed NEMA 12 standards for environmental protection.

2. The Sigma Control Basic system shall monitor direction of rotation, discharge pressure, emergency stop button, airend discharge temperature, and motor overload relay.

3. Compressor(s) shall shut down in the event of motor overload, high airend temperature, incorrect rotation, or loss of drive.

5. For Duplex configurations, control shall be capable of manually sequencing/ alternating compressors for maximum flow and to allow for even load hours. Compressors shall have optional controls available for automatic sequencing.

H. Compressor Enclosure(s)

1. Compressor shall have steel frame assembly and be completely enclosed, including bottom. All models shall include hinged doors and/or removable access panels for easy access to the compressor for maintenance. All models shall incorporate safety interlock switches on doors for protection of operators and maintenance personnel.

2. Enclosure shall be heavily sound insulated, and compressor shall have a maximum full-load noise level of 66 dB(A) at 3 feet in accordance with CAGI/Pneurop test code. All sound dampening material shall be oil repelling and cleanable.

3. Airend and motor shall be mounted on a steel frame isolated from compressor frame with rubber vibration isolators.

4. Compressor frame shall be isolated from the floor by rubber vibration pads. No special foundation shall be required.

5. All access panels/doors shall have slotted key locks or handles. Door key shall be provided.

6. Ambient cooling air shall enter enclosure after passing through a 40-micron filter mat.

7. Compressor shall be fitted with an air inlet filter rated at 4 microns.

8. Cabinet panels shall have a "Powder-Coat" type paint finish, which shall be durable and scratch-resistant.

9. All access panels/doors shall be gasketed to minimize dust or dirt entering the compressor enclosure.

I. Internal Piping

All major air and oil pipes shall be made of steel and feature flexible Aeroquip connections, with o-ring seals, to reduce the likelihood of cracks and leaks.

J. Lubrication/Cooling System

1. Compressor(s) shall have differential pressure, fluid circulation system. Compressors requiring a pump and/or stop valve are not acceptable.

2. Compressor shall be factory-filled with semi-synthetic or optional full synthetic lubricant.

3. Fluid filter shall be spin-on type capable of removing particles down to 10 microns.

4. Compressor fluid cooler shall have thermostatic control valve to maintain optimum operating temperature.

5. Compressor shall have an ASME separator tank/sump with integral fluid separator element and minimum 217 psig rated working pressure. Separation system shall include three stages - mechanical separation and two-stage coalescing filter. Compressor package shall have a maximum fluid carryover of 2 - 3 ppm. Tank shall also include sump pressure gauge, fill plug, fluid level sight glass(es), and quick disconnects for measuring air pressure differential across filter element. ASME coded safety relief valve(s) shall be installed on fluid separator tank. Separator shall also be equipped with quick disconnect and fluid drain hose for pressurized fluid changes.

6. Fluid coolers and aftercoolers shall be easily accessible for ease of maintenance. Air-cooled aftercooler and fluid cooler shall be integrally mounted to the compressor enclosure. Aftercooler approach temperature shall be less than 6 °F.

7. Fluid cooler shall include drain plugs to ensure complete fluid removal without costly flushing.

K. External Connections

Connections from the compressor to the receiver tank shall be flexible pipe to ensure no transmission of vibration between components.

L. Receiver Tank(s)

1. Air receiver tank shall be 80 gallons.

2. Air receiver tank shall have a maximum pressure rating of 230 psig.

3. Air receiver tank shall meet all applicable ASME specifications and codes.

4. Air receiver tank shall be fitted with liquid-filled pressure gauge, and manual drain. Automatic electric drain shall be available as an option. Air receiver tank shall be fitted with a pressure relief valve.

5. Pressure safety valve shall be sized to prevent over-pressurization of air receiver tank beyond its specified ASME rating.

M. Refrigerated Air Dryer(s)

1. Dryer shall be fully integrated to the compressor package and be capable of providing a 38°F pressure dew point.

2. Dryer fan motor shall be TEAO (Totally Enclosed Air Over) and rated IP44.

3. Dryer shall be rated for 230 psig maximum working pressure with a pressure drop not to exceed 3.2 psid.

4. Refrigerant type shall be R134a or approved equivalent.

5. Moisture separator and electronic demand condensate drain trap shall be mounted internal to the package.

6. Dryer shall include stainless steel plate-type heat exchangers, for high efficiency and low pressure drop.

N. Compressor Control

1. Compressor shall have load/unload controls with automatic dual control as standard. Switchable Modulation control shall be an acceptable option. Compressor shall automatically load after starting if system demands it. Compressor shall have time delay relay to shut down the compressor after running unloaded for a pre-determined period to avoid excessive motor starting.

2. Compressor shall cut in at 110 psig and cut out at 125 psig.

O. Testing and Inspection

1. Parts must be inspected as part of strict ISO 9001:2000 quality control program.

2. Each compressor shall be run and tested for leaks, pressure, temperature, rotation, and full-load amp draw.

P. Warranty

Compressor package shall be warranted free of defects in material and workmanship for a minimum period of 12 months. Compressor airend assembly, drive motor, and magnetic motor contactor(s) shall be warranted free of defects in material and workmanship for a minimum period of 2 years without restrictions based on the purchase of special lubricants or maintenance kits.

Q. Optional Limited Warranty

In addition to the standard limited warranty, the compressor airend assembly and drive motor shall be warranted free of defects in material and workmanship for a minimum period of 66 months from the date of shipment or 60 months from the date of start-up whichever occurs first. The following restrictions shall apply:

- Warranty shall apply to standard rotary screw compressors only.
- Warranty shall apply to compressor packages with a full-load operating pressure less than 145 psig.
- Customer shall return a completed warranty card at compressor startup.
- Customer shall use genuine Kaeser S-460 full synthetic lubricant only.
- Customer shall purchase one annual maintenance kit at time of purchase.
- Customer shall purchase one kit per year for the life of the warranty.
- Any additional maintenance or repair parts purchased during warranty period shall be genuine Kaeser parts only.
- Initial fluid change shall be after first 2000 hours or one year whichever occurs first.
- Fluid shall be changed annually after initial change, regardless of hours.

R. Start-Up Service

Start-up service shall be provided by factory-trained technicians at no charge to ensure equipment is running properly and adjusted to factory specifications. Maintenance instructions shall be discussed with customer to ensure they understand routine maintenance procedures. The maintenance training shall be conducted at the time of equipment start-up.

© 2008 Kaeser Compressors, Inc. All rights reserved. Specifications are subject to change without notice.
Kaeser Compressors, Inc. ▪ P.O. Box 946 ▪ Fredericksburg, Virginia 22404 ▪ (540) 898-5500 ▪ Fax (540) 898-5520 ▪ www.kaeser.com

Dialmatic
Housed Diaphragm Models
With Adjustment Dials
Water-tight Housing (NEMA 4)
Tamper-proof External Adjustment

OPERATING CHARACTERISTICS • ORDERING DATA

PRESSURE SWITCHES - All values given in P.S.I. (Gauge) except as noted "H_2O

Proof (Test) Pressure	Adjustable Range Decreasing Min.	Decreasing Max.	Increasing Min.	Increasing Max.	Approximate Actuation Value (Differential)	Wetted Material	Catalog Number CD1H	CD2H
83.30 H_2O	0.50	34.60	1.90	36.00	0.60 to 1.40	17-7PH	CD1H-H2SS	CD2H-H2SS
10.00	0.30	2.85	0.18	3.00	0.07 to 0.15	17-7PH	CD1H-A3SS	CD2H-A3SS
60.00	0.40	17.74	0.66	18.00	0.12 to 0.26	17-7PH	CD1H-H18SS	CD2H-H18SS
160.00	0.50	76.60	3.90	80.00	1.60 to 3.40	17-7PH	CD1H-A80SS	CD2H-A80SS
300.00	1.50	144.00	7.50	150.00	2.30 to 6.00	17-7PH	CD1H-A150SS	CD2H-A150SS
Approximate shipping weight: 1.75 lbs.								

PRESSURE:
CD1H SINGLE SETTING
CD2H DUAL CONTROL

VACUUM:
VCD1H SINGLE SETTING
VCD2H DUAL CONTROL

VACUUM SWITCHES - All values given in inches of mercury (Gauge)

Proof (Test) Vacuum	Proof (Test) Pressure	Adjustable Range Dec. Vacuum Min.	Dec. Vacuum Max.	Incr. Vacuum Min.	Incr. Vacuum Max.	Approximate Actuation Value (Differential)	Wetted Material	Catalog Number VCD1H	VCD2H
6.00 "Hg	10 PSI	0.06	5.72	0.34	6.00	0.14 to 0.28	17-7PH	VCD1H-A3SS	VCD2H-A3SS
30.00 "Hg	60 PSI	0.80	29.20	1.60	30.00	0.40 to 0.80	17-7PH	VCD1H-H18SS	VCD2H-H18SS
Approximate shipping weight: 1.75 lbs.									

17-7PH Stainless Steel

DETAIL DATA

ELECTRICAL CHARACTERISTICS: All models incorporate Underwriters' Laboratories, Inc. listed single pole double throw snap-action switching elements. Electrical rating (continuous inductive) 10 amps 125 or 250 volts AC, 3 amps 480 volts AC. Automatically reset by snap-action of switch. For more details and other switch classes, see pages 34-36.

ELECTRICAL CONNECTION:
Switches may be wired 'normally open' or 'normally closed' to free leads approximately 18" long.

PRESSURE (VACUUM) **CONNECTION:** ¼" npt internal thread. ½" npt available stainless steel only add – P2 to catalog number when ordering.

ADJUSTMENT:
Turn self locking adjustment screw counterclockwise to increase pressure setting or clockwise to increase vacuum settings.
All dials are calibrated for increasing settings.

OPTIONAL MODIFICATIONS: Stripped (no housing). To specify, change "H" to "S" in part number. Example: CD1S-H18. Consult factory for price and delivery.

WIRE CODING — PRESSURE
Circuit #1: Common — Purple
Normally Closed — Blue
Normally Open — Red
Circuit #2: Common — Brown
Normally Closed — Orange
Normally Open — Yellow

WIRE CODING — VACUUM
Circuit #1: Common — Purple
Normally Closed — Red
Normally Open — Blue
Circuit #2: Common — Brown
Normally Closed — Yellow
Normally Open — Orange

All models are Underwriters' Laboratories listed in the Electrical Construction Materials Directory under Industrial Control Equipment, Float and Pressure Operated (NKPZ), File E42816, and Canadian Standards Association listed under Guide 380-W-1.16, Class 3231, File 22355.

CD1H

CD2H

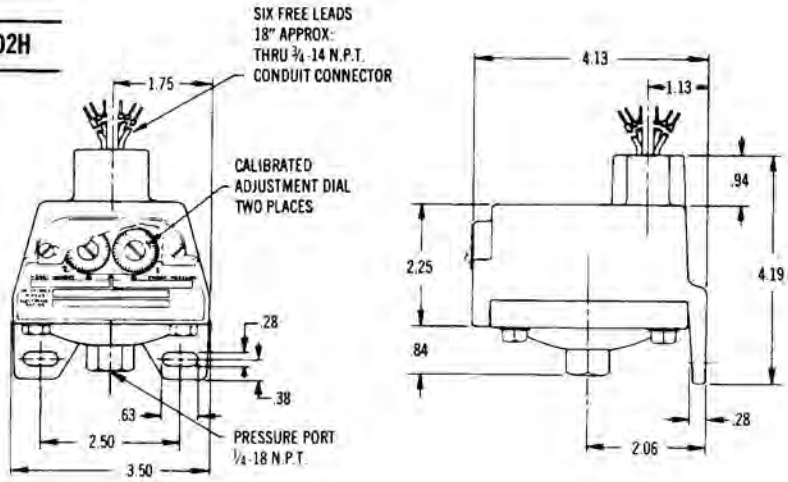

Regulator R18

= "Most Popular"

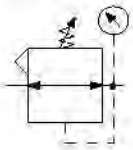

Relieving

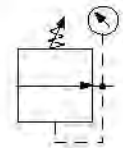

Non-Relieving

R18-02-F0G0

Specifications

Flow Capacity*	1/4	82 SCFM (38,7 dm³/s)
	3/8	97 SCFM (45,7 dm³/s)
	1/2	97 SCFM (45,7 dm³/s)
Operating Temperature		32° to 150°F (0° to 65,5°C)
Maximum Supply Pressure		300 PSIG (21 bar)
Adjusting Range Pressure		0-30 PSIG (0-2,1 bar) 0-60 PSIG (0-4,1 bar) 0-125 PSIG (0-8,6 bar) 0-250 PSIG (0-17,2 bar)
Port Size	NPT / BSPP-G	1/4, 3/8, 1/2
Gauge Port (2 ea.)	NPT / BSPP-G	1/4
Weight	lb. (kg)	1.16 (0,5)

* Inlet pressure 100 PSIG (6,9 bar). Secondary pressure 90 PSIG (6,2 bar).

Features

- Balanced Valve Design
- Spring-loaded Diaphragm
- 4 Adjusting Pressure Ranges Available
- 1/2" NPT / BSPP-G Over-port
- Reverse-flow Available
- 2 Gauge Ports

Materials of Construction

Body		Zinc
Adjustment Knob		Acetal
Body Cap		ABS
Bonnet		33% glass-filled nylon
Diaphragm Assembly		Nitrile / Zinc
Bottom Plug		33% Glass-filled Nylon
Valve Assembly		Brass / Nitrile
Springs	Main Regulating Valve	Steel S.S.
Seals		Nitrile
Panel Nut		Acetal

⚠ WARNING

Product rupture can cause serious injury.
Do not connect regulator to bottled gas.
Do not exceed maximum primary pressure rating.

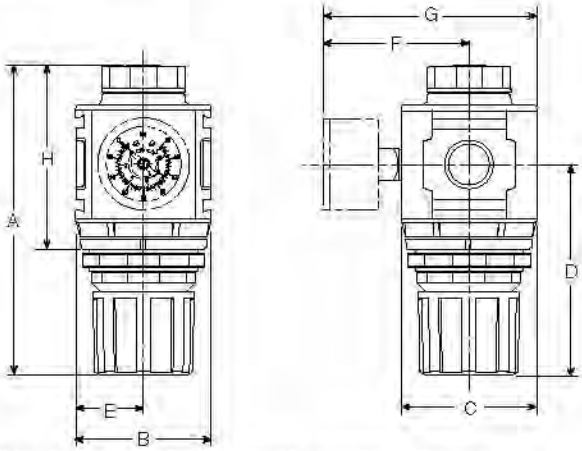

NOTE: 2" Dia. (51 mm) hole required for panel nut mounting.

CAUTION:

REGULATOR PRESSURE ADJUSTMENT – The working range of knob adjustment is designed to permit outlet pressures within their full range. Pressure adjustment beyond this range is also possible because the knob is not a limiting device. This is a common characteristic of most industrial regulators, and limiting devices may be obtained only by special design.

For best performance, regulated pressure should always be set by increasing the pressure up to the desired setting.

Dimensions

Models Inches (mm)	A	B	C	D	E	F	G	H
Standard Unit R18-XX-F000	5.4 (136)	2.36 (60)	2.36 (60)	3.66 (93)	1.2 (30)	— —	— —	3.1 (78.7)
With Gauge R18-XX-F0G0	5.4 (136)	2.36 (60)	2.36 (60)	3.66 (93)	1.2 (30)	2.57 (65)	3.74 (94)	3.1 (78.7)

= "Most Popular"

Replacement Kits

Diaphragm Assembly, Relieving RRP-96-656
Diaphragm Assembly, Non-relieving RRP-96-657
Valve Assembly RRP-96-658
Spring, Regulating 0 to 30 PSIG (0 to 2.1 bar) RRP-96-659
Spring, Regulating 0 to 60 PSIG (0 to 4,1 bar) RRP-96-660
Spring, Regulating 0 to 125 PSIG (0 to 8,6 bar) RRP-96-661
Spring, Regulating 0 to 250 PSIG (0 to 17,2 bar) .. RRP-96-662
Adjusting knob RRP-16-340-000

Accessories

Gauge, Pressure, 0 to 30 PSIG,
1-1/2" Dial Face, 1/4 NPT CBM RRP-96-663
Gauge, Pressure, 0 to 60 PSIG,
1-1/2" Dial Face, 1/4 NPT CBM RRP-96-664
Gauge, Pressure, 0 to 160 PSIG,
1-1/2" Dial Face, 1/4 NPT CBM RRP-96-665
Gauge, Pressure, 0 to 300 PSIG,
1-1/2" Dial Face, 1/4 NPT CBM RRP-96-666
Gauge, Pressure, 0 to 2,1 bar,
1-1/2" Dial Face, G 1/4 CBM RRP-96-667
Gauge, Pressure, 0 to 4,1 bar,
1-1/2" Dial Face, G 1/4 CBM RRP-96-668
Gauge, Pressure, 0 to 11 bar,
1-1/2" Dial Face, G 1/4 CBM RRP-96-669
Gauge, Pressure, 0 to 21 bar,
1-1/2" Dial Face, G 1/4 CBM RRP-96-670
Wall Mounting Bracket, L-Type GPA-96-606
Wall Mounting Bracket, T-Type GPA-96-602
Tamper Resistant Kit RRP-96-671
Panel Mount Nut, Aluminum RRP-96-673
Panel Mount Nut, Plastic RRP-96-675

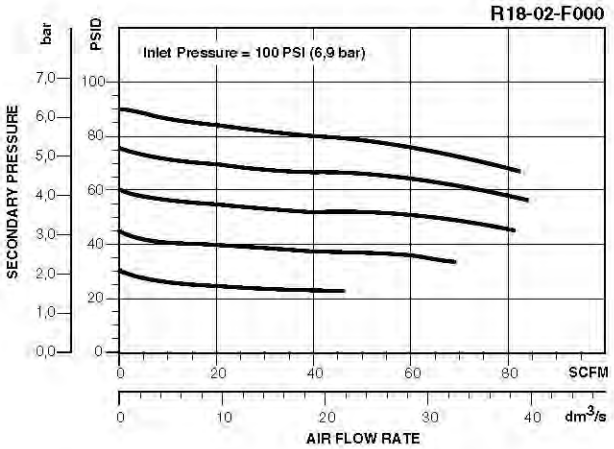

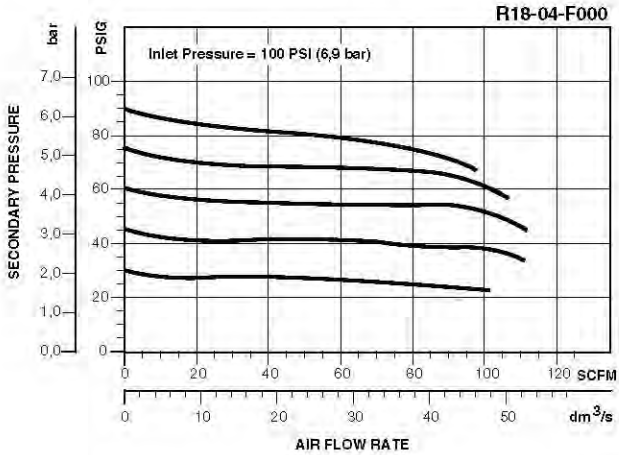

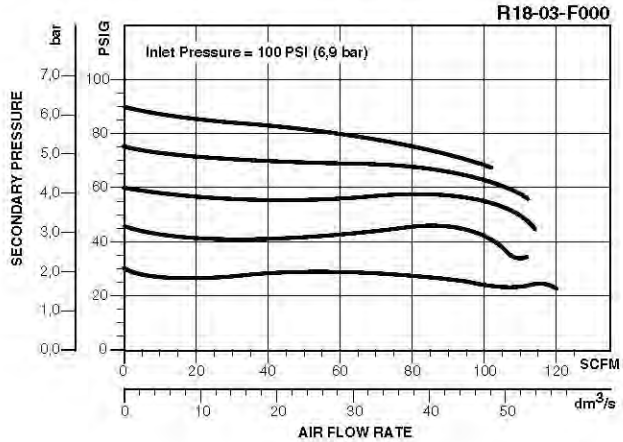

Ordering Information

Model Type	Port Size	With Gauge 5 to125 PSIG (0,4 to 8,6 bar)	With Gauge 10 to 250 PSIG (0,7 to 17,2 bar)	With Gauge 3 to 60 PSIG (0,2 to 4,1 bar)	Without Gauge 5 to 125 PSIG (0,4 to 8,6 bar)	Without Gauge 10 to 250 PSIG (0,7 to 17,2 bar)	Without Gauge 3 to 60 PSIG (0,2 to 4,1 bar)
Relieving	1/4	R18-02-F0G0	R18-02-G0G0	R18-02-D0G0	R18-02-F000	R18-02-G000	R18-02-D000
	3/8	R18-03-F0G0	R18-03-G0G0	R18-03-D0G0	R18-03-F000	R18-03-G000	R18-03-D000
	1/2	R18-04-F0G0	R18-04-G0G0	R18-04-D0G0	R18-04-F000	R18-04-G000	R18-04-D000
Non-relieving	1/4	R18-02-R0G0	R18-02-S0G0	R18-02-W0G0	R18-02-R000	R18-02-S000	R18-02-W000
	3/8	R18-03-R0G0	R18-03-S0G0	R18-03-W0G0	R18-03-R000	R18-03-S000	R18-03-W000
	1/2	R18-04-R0G0	R18-04-S0G0	R18-04-W0G0	R18-04-R000	R18-04-S000	R18-04-W000

Options - To order an option supplied with the unit model, add the appropriate coded suffix letter in the designated position of the model number. For additional information on accessories and repair kits refer to the Table of Contents.

Features

- Wide range of pressure ratings, sizes, and resilient materials provide long service life and low internal leakage
- High Flow Valves for liquid, corrosive, and air/inert gas service
- Industrial applications include:
  - Car wash
  - Laundry equipment
  - Air compressors
  - Industrial water control
  - Pumps

Construction

Valve Parts in Contact with Fluids		
Body	Brass	304 Stainless Steel
Seals and Discs	NBR or PTFE	
Disc-Holder	PA	
Core Tube	305 Stainless Steel	
Core and Plugnut	430F Stainless Steel	
Springs	302 Stainless Steel	
Shading Coil	Copper	Silver

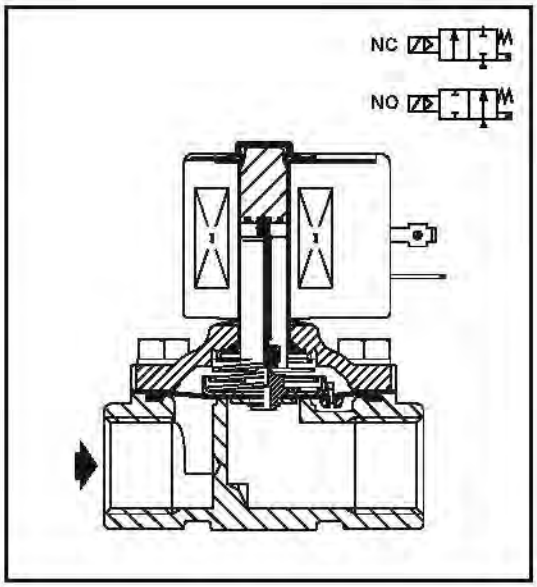

Electrical

Standard Coil and Class of Insulation	Watt Rating and Power Consumption				Spare Coil Part Number			
		AC			General Purpose		Explosionproof	
	DC Watts	Watts	VA Holding	VA Inrush	AC	DC	AC	DC
F	-	6.1	16	40	238210	-	238214	-
F	11.6	10.1	25	70	238610	238710	238614	238714
F	16.8	16.1	35	180	272610	97617	272614	97617
F	-	17.1	40	93	238610	-	238614	-
F	-	20	43	240	99257	-	99257	-
F	-	20.1	48	240	272610	-	272614	-
H	30.6	-	-	-	-	74073	-	74073
H	40.6	-	-	-	-	238910	-	238914

Standard Voltages: 24, 120, 240, 480 volts AC, 60 Hz (or 110, 220 volts AC, 50 Hz). 6, 12, 24, 120, 240 volts DC. Must be specified when ordering.
Other voltages available when required.

Solenoid Enclosures

Standard: RedHat II - Watertight, Types 1, 2, 3, 3S, 4, and 4X; RedHat - Type 1

Optional: RedHat II - Explosionproof and Watertight, Types 3, 3S, 4, 4X, 6, 6P, 7, and 9; Red-Hat - Explosionproof and Watertight, Types 3, 4, 4X, 7, and 9.

(To order, add prefix "EF" to catalog number, except Catalog Numbers 8210B057, 8210B058, and 8210B059, which are not available with Explosionproof enclosures.)

See Optional Features Section for other available options.

Nominal Ambient Temp. Ranges

RedHat II/
RedHat AC: 32°F to 125°F (0°C to 52°C)

RedHat II DC: 32°F to 104°F (0°C to 40°C)
RedHat DC: 32°F to 77°F (0°C to 25°C)
(104°F/40°C occasionally)

Refer to Engineering Section for details.

Approvals

CSA certified. RedHat II meets applicable CE directives.
Refer to Engineering Section for details.

Specifications (English units)

Pipe Size (ins.)	Orifice Size (ins.)	Cv Flow Factor	Operating Pressure Differential (psi)							Max. Fluid Temp. °F		Brass Body			Stainless Steel Body			Watt Rating/ Class of Coil Insulation ⑦	
				Max. AC			Max. DC												
			Min.	Air-Inert Gas	Water	Light Oil @ 300 SSU	Air-Inert Gas	Water	Light Oil @ 300 SSU	AC	DC	Catalog Number	Const. Ref. ④	UL ⑤ Listing	Catalog Number	Const. Ref. ④	UL ⑤ Listing	AC	DC
NORMALLY CLOSED (Closed when de-energized), NBR or PTFE ② Seating																			
3/8	3/8	1.5	①	150	125	-	40	40	-	180	150	8210G073 ③	1P	●	8210G036 ③	1P	●	6.1/F	11.6/F
3/8	5/8	3	0	150	150	-	40	40	-	180	150	8210G093	5D	○	-	-	-	10.1/F	11.6/F
3/8	5/8	3	5	200	150	135	125	100	100	180	150	8210G001	6D	○	-	-	-	6.1/F	11.6/F
3/8	5/8	3	5	300	300	300	-	-	-	175	-	8210G006	5D	○	-	-	-	17.1/F	-
1/2	7/16	2.2	①	150	125	-	40	40	-	180	150	8210G015 ③	2P	●	8210G037 ③	2P	●	6.1/F	11.6/F
1/2	5/8	4	0	150	150	-	40	40	-	180	150	8210G094	5D	○	-	-	-	10.1/F	11.6/F
1/2	5/8	4	0	150	150	125	40	40	-	175	150	-	-	-	8210G087	7D	●	17.1/F	11.6/F
1/2	5/8	4	5	200	150	135	125	100	100	180	150	8210G002	6D	○	-	-	-	6.1/F	11.6/F
1/2	5/8	4	5	300	300	300	-	-	-	175	-	8210G007	5D	○	-	-	-	17.1/F	-
1/2	3/4	4	5	-	300	-	-	300	-	180	125	8210G227	5D	○	-	-	-	17.1/F	40.6/H
3/4	5/8	4.5	0	150	150	125	40	40	-	175	150	-	-	-	8210G088	7D	●	17.1/F	11.6/F
3/4	3/4	5	5	125	125	125	100	90	75	180	150	8210G009	9D	○	-	-	-	6.1/F	11.6/F
3/4	3/4	5	0	150	150	-	40	40	-	180	150	8210G095	8D	○	-	-	-	10.1/F	11.6/F
3/4	3/4	6.5	5	250	150	100	125	125	125	180	150	8210G003	11D	○	-	-	-	6.1/F	11.6/F
3/4	3/4	6	0	-	-	-	200	180	180	-	77	8210B026 ② ‡	10P	-	-	-	-	-	30.6/H
3/4	3/4	6	0	350	300	200	-	-	-	200	-	8210G026 ② ‡	40P	●	-	-	-	16.1F	-
1	1	13	0	-	-	-	100	100	80	-	77	8210B054 ‡	31D	-	8210D089	15D	-	-	30.6/H
1	1	13	0	150	125	125	-	-	-	180	-	8210G054	41D	●	8210G089	45D	●	16.1/F	-
1	1	13	5	150	150	100	125	125	125	180	150	8210G004	12D	○	-	-	-	6.1/F	11.6/F
1	1	13.5	0	300	225	115	-	-	-	200	-	8210G027 ‡	42P	●	-	-	-	20.1/F	-
1	1	13.5	10	300	300	300	-	-	-	175	-	8210G078 ②	13P	-	-	-	-	17.1/F	-
1 1/4	1 1/8	15	0	-	-	-	100	100	80	-	77	8210B055 ‡	32D	-	-	-	-	-	30.6/H
1 1/4	1 1/8	15	0	150	125	125	-	-	-	180	-	8210G055	43D	●	-	-	-	16.1/F	-
1 1/4	1 1/8	15	5	150	150	100	125	125	125	180	150	8210G008	16D	○	-	-	-	6.1/F	11.6/F
1 1/2	1 1/4	22.5	0	-	-	-	100	100	80	-	77	8210B056 ‡	33D	-	-	-	-	-	30.6/H
1 1/2	1 1/4	22.5	0	150	125	125	-	-	-	180	-	8210G056	44D	●	-	-	-	16.1/F	-
1 1/2	1 1/4	22.5	5	150	150	100	125	125	125	180	150	8210G022	18D	●	-	-	-	6.1/F	11.6/F
2	1 3/4	43	5	150	125	90	50	50	50	180	150	8210G100	20P	●	-	-	-	6.1/F	11.6/F
2 1/2	1 3/4	45	5	150	125	90	50	50	50	180	150	8210G101	21P	●	-	-	-	6.1/F	11.6/F
NORMALLY OPEN (Open when de-energized), NBR Seating (PA Disc-Holder, except as noted)																			
3/8	5/8	3	0	150	150	125	125	125	80	180	150	8210G033	23D	●	-	-	-	10.1/F	11.6/F
3/8	5/8	3	5	250	200	200	250	200	200	180	180	8210G011 ⑥ ⑨	39D	●	-	-	-	10.1/F	11.6/F
1/2	5/8	4	0	150	150	125	125	125	80	180	150	8210G034	23D	●	-	-	-	10.1/F	11.6/F
1/2	5/8	3	0	150	150	100	125	125	80	180	150	-	-	-	8210G030	37D	●	10.1/F	11.6/F
1/2	5/8	4	5	250	200	200	250	200	200	180	180	8210G012 ⑥ ⑨	39D	●	-	-	-	10.1/F	11.6/F
3/4	3/4	5.5	0	150	150	125	125	125	80	180	150	8210G035	25D	●	-	-	-	10.1/F	11.6/F
3/4	5/8	3	0	150	150	100	125	125	80	180	150	-	-	-	8210G038	38D	●	10.1/F	11.6/F
3/4	3/4	6.5	5	-	-	-	250	200	200	-	180	8210C013	24D	●	-	-	-	-	16.8/F
3/4	3/4	6.5	5	250	200	200	-	-	-	180	-	8210G013	46D	●	-	-	-	16.1/F	-
1	1	13	0	125	125	125	-	-	-	180	-	8210B057 ⑥ ⑩	34D	●	-	-	-	20/F	-
1	1	13	5	-	-	-	125	125	125	-	180	8210D014	26D	●	-	-	-	-	16.8/F
1	1	13	5	150	150	125	-	-	-	180	-	8210G014	47D	●	-	-	-	16.1/F	-
1 1/4	1 1/8	15	0	125	125	125	-	-	-	180	-	8210B058 ⑥ ⑩	35D	●	-	-	-	20/F	-
1 1/4	1 1/8	15	5	-	-	-	125	125	125	-	180	8210D018	28D	●	-	-	-	-	16.8/F
1 1/4	1 1/8	15	5	150	150	125	-	-	-	180	-	8210G018	48D	●	-	-	-	16.1/F	-
1 1/2	1 1/4	22.5	0	125	125	125	-	-	-	180	-	8210B059 ⑥ ⑩	36D	●	-	-	-	20/F	-
1 1/2	1 1/4	22.5	5	-	-	-	125	125	125	-	180	8210D032	29D	●	-	-	-	-	16.8/F
1 1/2	1 1/4	22.5	5	150	150	125	-	-	-	180	-	8210G032	49D	●	-	-	-	16.1/F	-
2	1 3/4	43	5	-	-	-	125	125	125	-	150	8210 103	30P	●	-	-	-	-	16.8/F
2	1 3/4	43	5	125	125	125	-	-	-	180	-	8210G103	50P	●	-	-	-	16.1/F	-
2 1/2	1 3/4	45	5	-	-	-	125	125	125	-	150	8210 104	27P	●	-	-	-	-	16.8/F
2 1/2	1 3/4	45	5	125	125	125	-	-	-	180	-	8210G104	51P	●	-			16.1/F	-

① 5 psi on Air; 1 psi on Water.
② Valve provided with PTFE main disc.
③ Valve includes Ultem (G.E. trademark) piston.
④ Letter "D" denotes diaphragm construction; "P" denotes piston construction.
⑤ ○ Safety Shutoff Valve; ● General Purpose Valve.
Refer to Engineering Section (Approvals) for details.
⑥ Valves not available with Explosionproof enclosures.
⑦ On 50 hertz service, the watt rating for the 6.1/F solenoid is 8.1 watts.
⑧ AC construction also has PA seating.
⑨ No disc-holder.
⑩ Stainless steel disc-holder.
‡ Must have solenoid mounted vertical and upright.

Dimensions: inches (mm)

Const. Ref.		H	K	L	P	W
1*	ins.	3.85	3.00	1.91	3.41	1.69
	mm	98	76	49	87	43
2*	ins.	4.17	3.25	2.28	3.63	1.69
	mm	106	83	58	92	43
5	ins.	3.84	2.31	2.75	3.28	2.28
	mm	98	59	70	83	58
6*	ins.	3.38	1.94	2.75	2.80	2.28
	mm	86	49	70	71	58
7	ins.	4.19	2.50	2.81	3.47	2.39
	mm	106	64	71	88	61
8	ins.	4.13	2.47	2.81	3.44	2.29
	mm	105	63	71	87	58
9*	ins.	3.66	2.10	2.81	2.96	2.28
	mm	93	53	71	75	58
10*	ins.	5.25	X	2.81	4.59	2.31
	mm	133	X	71	117	59
11*	ins.	4.16	2.66	3.84	3.52	2.75
	mm	106	68	98	89	70
12	ins.	5.64	3.15	3.75	4.01	3.36
	mm	143	80	95	102	85
13	ins.	4.44	3.22	3.75	4.19	5.81
	mm	113	82	95	106	147
15*	ins.	5.34	X	3.75	4.47	3.84
	mm	136	X	95	114	98
16	ins.	5.64	3.15	3.66	4.01	3.56
	mm	143	80	93	102	90
18	ins.	6.11	3.30	4.38	4.16	3.92
	mm	155	84	111	106	100
20*	ins.	7.33	3.71	5.06	4.57	4.87
	mm	186	94	129	116	124
21*	ins.	7.33	3.71	5.50	4.57	4.87
	mm	186	94	140	116	124
23	ins.	4.35	2.65	2.75	3.79	2.28
	mm	110	67	70	96	58
24	ins.	5.06	X	3.78	4.44	2.75
	mm	129	X	96	113	70
25	ins.	4.64	2.81	2.81	3.94	2.28
	mm	118	71	71	100	58
26	ins.	6.53	X	3.75	4.91	3.19
	mm	166	X	95	125	81
27	ins.	8.22	X	5.50	5.47	4.87
	mm	209	X	140	139	124
28	ins.	6.53	X	3.66	4.91	3.19
	mm	166	X	93	125	81
29	ins.	7.03	X	4.38	5.06	4.40
	mm	179	X	111	129	112

* DC dimensions slightly larger.
IMPORTANT: Valves may be mounted in any position, except as noted in specifications table.

Const. Ref. 1, 2

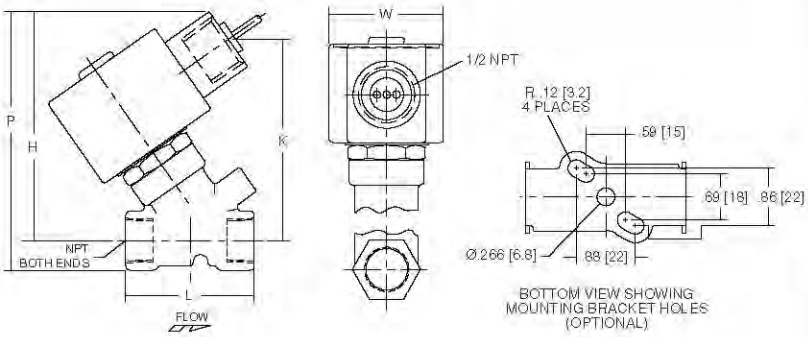

Const. Ref. 13

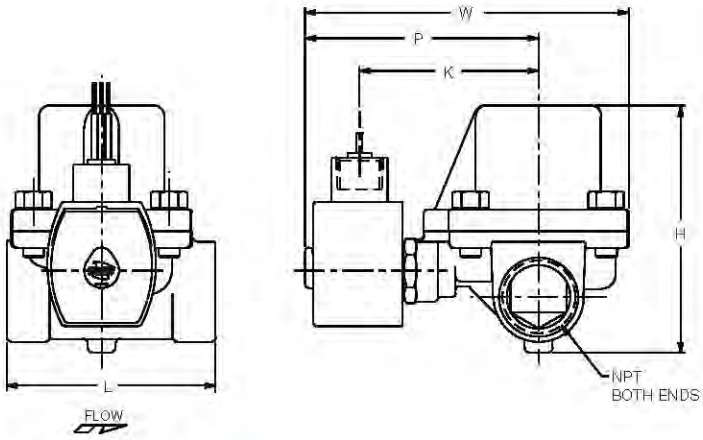

Const. Ref. 5-9, 11, 20, 21, 23 , 25, 37,38

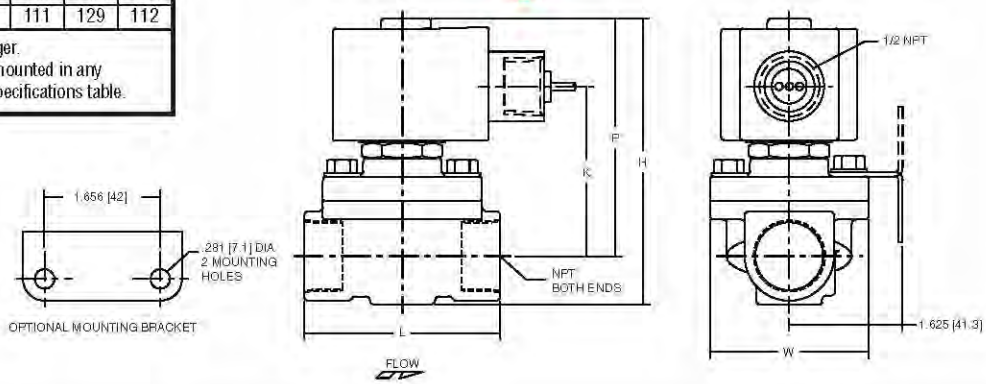

RUBINETTERIE BRESCIANE

SERIES 250N - 253N
DIRECT MOUNT 2 WAY BALL VALVE

Brass ball valve, female/female, with ISO 5211 pad for actuator.
- Full port from 1/4" to 4".
- Pressure rating 600 WOG - 150 WSP.
- Temperature to 366°F.
- Blow out proof stem, chrome plated brass ball.
- P.T.F.E. seats with O-RING backing for low operating torque.
- P.T.F.E. seats and double O-RING stem packing.
- 100% electronically tested in the open and closed position at 80 PSI.

250N - WITH BRASS BALL AND STEM SIZE UP TO 4".
253N - WITH STAINLESS STEEL BALL AND STEM SIZE UP TO 2".

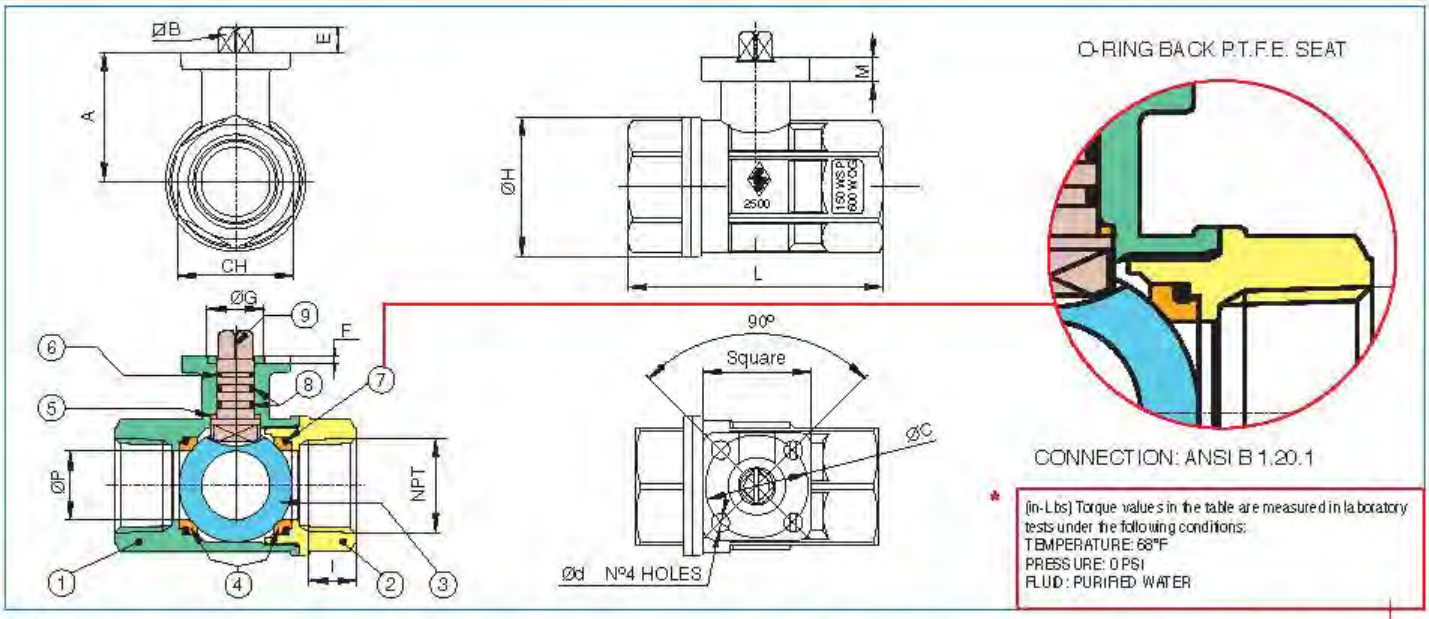

N.POS	PART NAME	MATERIAL	N.POS
1	BODY	BRASS CW617N UNI EN 12165	1
2	END CONNECTION	BRASS CW617N UNI EN 12165	1
3	BALL	BRASS CW617N UNI EN 12165	1
4	BALL SEAT	P.T.F.E	2
5	THRUST WASHER	P.T.F.E	1
6	STEM SEAL	P.T.F.E	1
7	O-RING	FKM (Viton®)	2
8	O-RING	FKM (Viton®)	2
9	STEM	BRASS CW614N UNI EN 12164	1

SIZE	Square	A	ØB	ØC	Ød	E	F	ØG	ØH	I	L	CH	M	ØP	PSI	Lbs	* in-Lbs
1/4"	1.49	1.28	0.35	1.42 (ISO F03)	0.24	0.35	0.08	0.98	1.32	0.39	2.64	1.06	0.22	0.39	600	0.82	53.10
3/8"	1.49	1.28	0.35	1.42 (ISO F03)	0.24	0.35	0.08	0.98	1.32	0.40	2.64	1.06	0.22	0.39	600	0.79	53.10
1/2"	1.49	1.28	0.35	1.42 (ISO F03)	0.24	0.35	0.08	0.98	1.32	0.53	2.64	1.06	0.22	0.56	600	0.66	53.10
3/4"	1.49	1.36	0.35	1.42 (ISO F03)	0.24	0.35	0.08	0.98	1.57	0.55	3.00	1.26	0.22	0.75	600	0.91	53.10
1"	1.49	1.79	0.35	1.42 (ISO F03)	0.24	0.35	0.12	0.98	1.93	0.66	3.35	1.61	0.24	0.95	600	1.55	53.10
1"1/4	1.49	1.93	0.35	1.42 (ISO F03)	0.24	0.35	0.12	0.98	2.30	0.68	3.66	1.97	0.24	1.18	600	2.14	53.10
1"1/2	1.96	2.52	0.43	1.97 (ISO F05)	0.27	0.43	0.12	1.38	2.87	0.68	4.13	2.16	0.39	1.49	600	3.71	150.45
2"	1.96	2.88	0.43	1.97 (ISO F05)	0.27	0.43	0.12	1.38	3.60	0.70	4.80	2.75	0.31	1.97	600	5.52	150.45
2"1/2	2.75	3.48	0.55	2.76 (ISO F07)	0.35	0.59	0.12	2.16	4.51	0.93	6.10	3.54	0.35	2.52	600	8.83	274.35
3"	2.75	3.85	0.55	2.76 (ISO F07)	0.35	0.59	0.12	2.16	5.35	1.01	6.89	4.13	0.35	3.00	600	13.29	274.35
4"	2.75	4.59	0.67	2.76 (ISO F07)	0.35	0.69	0.12	2.16	6.53	1.09	8.03	5.12	0.33	3.74	600	21.54	646.05

Type 4X Indoor Use Only Enclosure.

NEW – DESIGN PROTECTED

GENERAL SPECIFICATIONS

VALBIA electric actuators are designed for the automation of ball and butterfly valves for the industrial, commercial and OEM markets. As a result of years of intensive R+D, advanced high-tech electrical component design and precise gearing VALBIA electric actuators offer the best in performance and long term reliability.

The range has been manufactured with the following features:

- The actuator housing is made from a V0 self-extinguish class techno-polymer material.
- The kinematics is made by two steel and techno-polymer gear wheels, sustained by hardened steel pinions, mounted on self-lubricating bushings (excluding Mod. VB015), and inserted in a rugged die-cast aluminium structure.
- The direct connection part of the actuators to the valves, is made via a painted die-cast aluminium plate, with a dual drilled ISO 5211 interface.
- The electronic circuit automatically adjusts the motor speed, (depending on the torque variations), to keep the cycle time constant.
- All actuators are provided with an electronic system and torque limiter.
- A standard heater is activated once the actuator is powered, and when the temperature inside the housing drops below 77° F to prevent condensation.
- Two auxillary limit switches are standard.
- Optional 4-20 mA 0-10v modulating boards and battery back-up protection are available.

MODEL		VB015	VB030	VB060	VB110	VB190	VB270	VB350
MAX WORKING TORQUE (in-Lbs)		133	266	530	975	1680	2390	3100
VOLTAGE (V)	LOW VOLTAGE	12V AC/DC	12V DC	12V DC	12V DC	12V DC	12V DC	12V DC
		24V AC/DC	24V AC/DC	24V AC/DC	24V AC/DC	24V AC/DC	24V AC/DC	24V AC/DC
	HIGH VOLTAGE MULTITENSION	100-240V AC	100-240V AC	100-240V AC	100-240V AC	100-240V AC	100-240V AC	100-240V AC
WORKING TIME (sec)		10	8	9	27	27	50	50
TORQUE LIMITER		STD	STD	STD	STD	STD	STD	STD
DUTY RATING		50%	75%	75%	75%	75%	75%	75%
PROTECTION		IP65 ** NEMA 4 X	IP65-67 NEMA 4 X	IP65-67 NEMA 4 X	IP65-67 NEMA 4 X	IP65-67 NEMA 4 X	IP65-67 NEMA 4 X	IP65-67 NEMA 4 X
ROTATION		90°	90°	90°	90°	90°	90°	90°
UPON REQUEST		180°	180° or 270°	180° or 270°	180° or 270°	180° or 270°	180° or 270°	180° or 270°
MANUAL INTERVENTION		STD	STD	STD	STD	STD	STD	STD
POSITION INDICATOR		STD	STD	STD	STD	STD	STD	STD
WORKING TEMPERATURE		-4°F + 131°F	-4°F + 131°F	-4°F + 131°F	-4°F + 131°F	-4°F + 131°F	-4°F + 131°F	-4°F + 131°F
HEATER		STD	STD	STD	STD	STD	STD	STD
ADDITIONAL FREE LIMIT SWITCHES		n°2 STD	n°2 STD	n°2 STD	n°2 STD	n°2 STD	n°2 STD	n°2 STD
DRILLING ISO 5211 PAD		F03 - F05 *	F03 - F05 *	F05 - F07	F07 - F10	F07 - F10	F07 - F10	F07 - F10
SQUARE DRIVE		0.43	0.43	0.55	0.67	0.67	0.87	0.87
SQUARE UPON REQUEST		0.35	0.35-0.55	0.43-0.67	0.55-0.87	0.55-0.87	0.67	0.67
SAFETY BLOCK		NOT AVAILABLE	UPON REQUEST	UPON REQUEST	UPON REQUEST	UPON REQUEST	UPON REQUEST	UPON REQUEST
			NOT AVAILABLE FOR MOD 12V					
POSITIONER (4~20mA or 0~10 VDC)		NOT AVAILABLE	UPON REQUEST	UPON REQUEST	UPON REQUEST	UPON REQUEST	UPON REQUEST	UPON REQUEST
LINEAR POTENTIOMETER (5K Ω 1W)		NOT AVAILABLE	UPON REQUEST	UPON REQUEST	UPON REQUEST	UPON REQUEST	UPON REQUEST	UPON REQUEST
ELECTRICAL CONNECTIONS		PG11	PG11	PG11	PG11	PG11	PG11	PG11
WEIGHT (LBS)		3.09	5.07	7.28	10.80	10.80	13.23	13.23

* upon request F04 only

** UL pending

ELECTRIC ACTUATOR POWER CONSUMPTION

MODEL		VB015		VB030		VB060		VB110		VB190		VB270		VB350	
VERSION H	NOMINAL VOLTAGE	110V AC	230V AC	100-240V AC											
	ABSORBED CURRENT	75mA	25mA	0.3-0.2A		0.6-0.3A									
	ABSORBED POWER	6.6 VA	6 VA	30-48VA		60-72 VA									
VERSION L	NOMINAL VOLTAGE	12V AC/DC	24V AC/DC	12V DC	24V AC/DC	12V DC	24V AC/DC	12V DC	24V AC/DC	12V DC	24V AC/DC	12V DC	24V AC/DC	12V DC	24V AC/DC
	ABSORBED CURRENT	1.2A	0.6A	2.0A	1.0A	3.6A	1.8A	2.0A	1.0A	3.6A	1.8A	3.6A	1.8A	3.6A	1.8A
	ABSORBED POWER	15 VA		24 VA		44 VA		24 VA		44 VA		44 VA		44 VA	
	FREQUENCY	50/60 HZ													

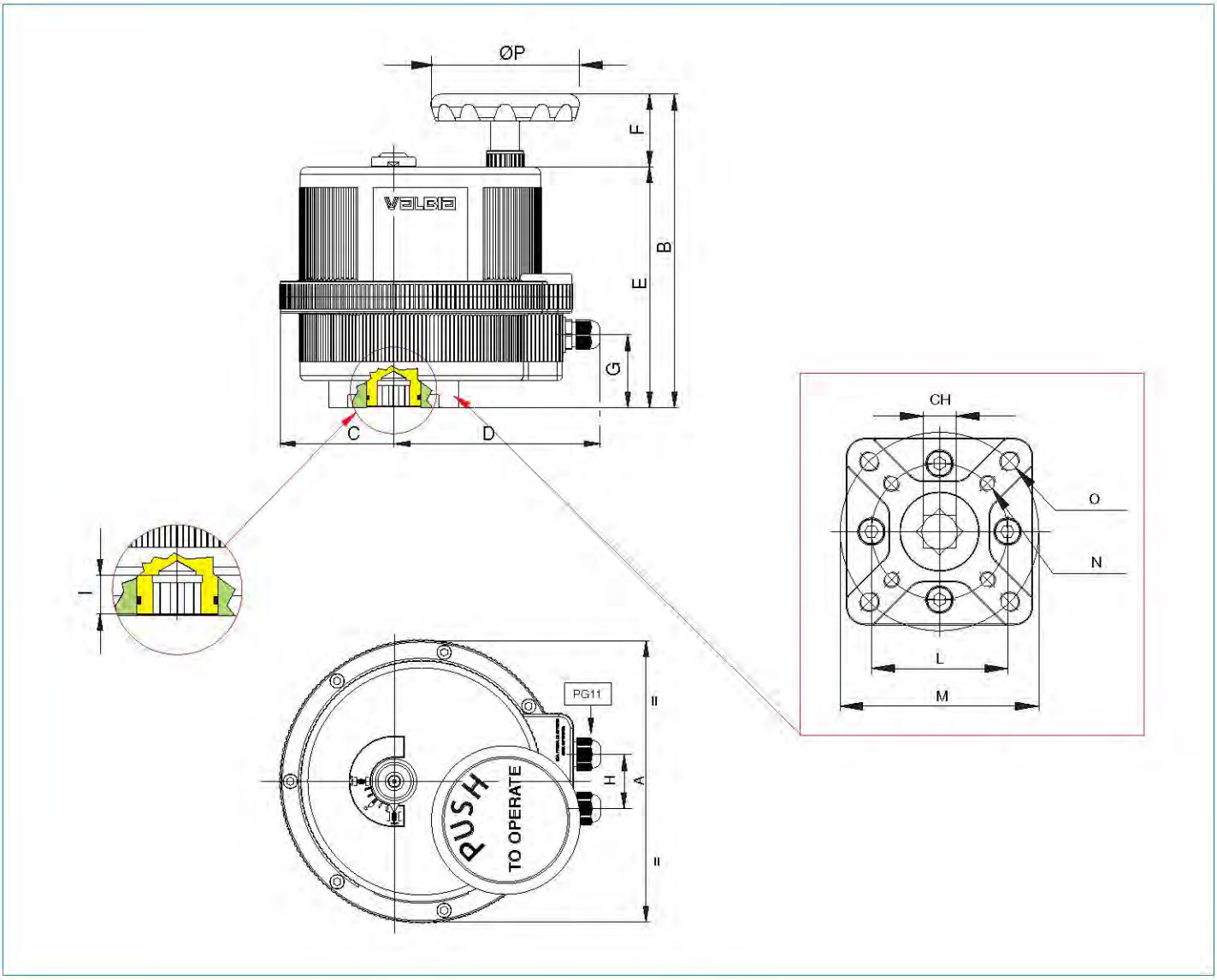

MOD.	DRILLING ISO 5211	CH	A	B	C	D	E	F	G	H	I	L	M	N	O	ØP
VB015	F03 * - F05	0.43	4.84	5.57	1.67	4.74	4.96	0.61	4.06	1.26	0.55	1.42	1.97	10-24 UNC 2BX0.47	1/4-20 UNC 2BX0.55	2.68
VB030	F03 * - F05	0.43	6.18	7.40	2.38	5.12	5.75	1.65	1.30	1.42	0.47	1.42	1.97	10-24 UNC 2BX0.47	1/4-20 UNC 2BX0.55	2.56
VB060	F05 - F07	0.55	7.28	8.46	2.66	5.77	6.81	1.65	2.01	1.42	0.63	1.97	2.76	1/4-20 UNC 2BX0.59	5/16-18 UNC 2BX0.67	2.56
VB110	F07 - F10	0.67	8.31	9.14	3.31	6.02	7.01	2.13	2.13	1.58	0.75	2.76	4.02	5/16-18 UNC 2BX0.79	3/8-16 UNC 2BX0.79	4.33
VB190	F07 - F10	0.67	8.31	9.14	3.31	6.02	7.01	2.13	2.13	1.58	0.75	2.76	4.02	5/16-18 UNC 2BX0.79	3/8-16 UNC 2BX0.79	4.33
VB270	F07 - F10	0.87	8.74	9.19	3.03	6.69	7.17	2.03	2.13	1.58	0.95	2.76	4.02	5/16-18 UNC 2BX0.79	3/8-16 UNC 2BX0.79	4.33
VB350	F07 - F10	0.87	8.74	9.19	3.03	6.69	7.17	2.03	2.13	1.58	0.95	2.76	4.02	5/16-18 UNC 2BX0.79	3/8-16 UNC 2BX0.79	4.33

* Upon request F04 only

ELECTRIC WIRING VB015 12V-24V AC/DC

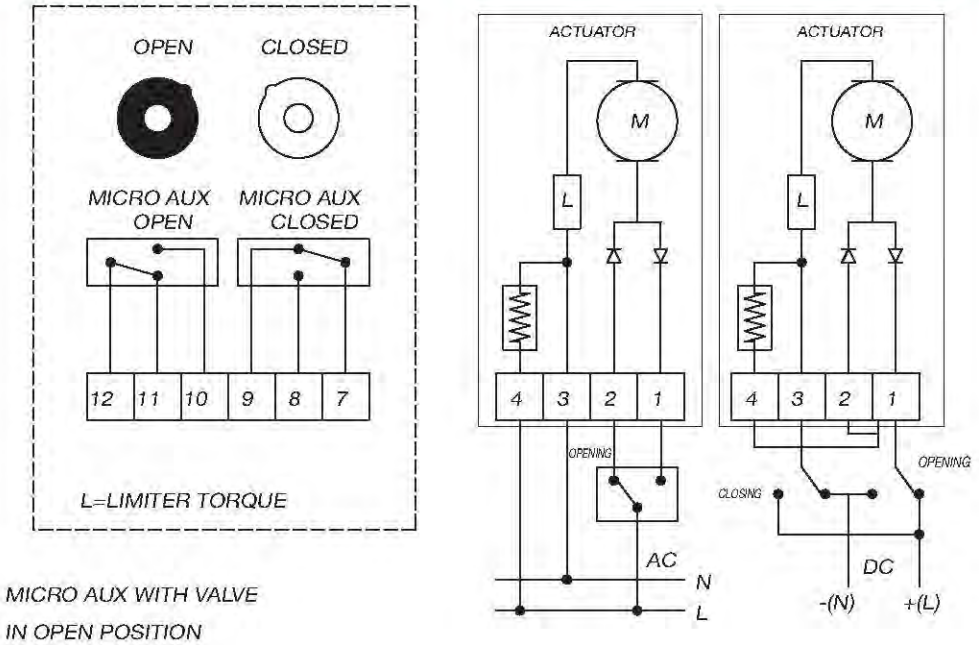

ELECTRIC WIRING VB015 115V-230V AC

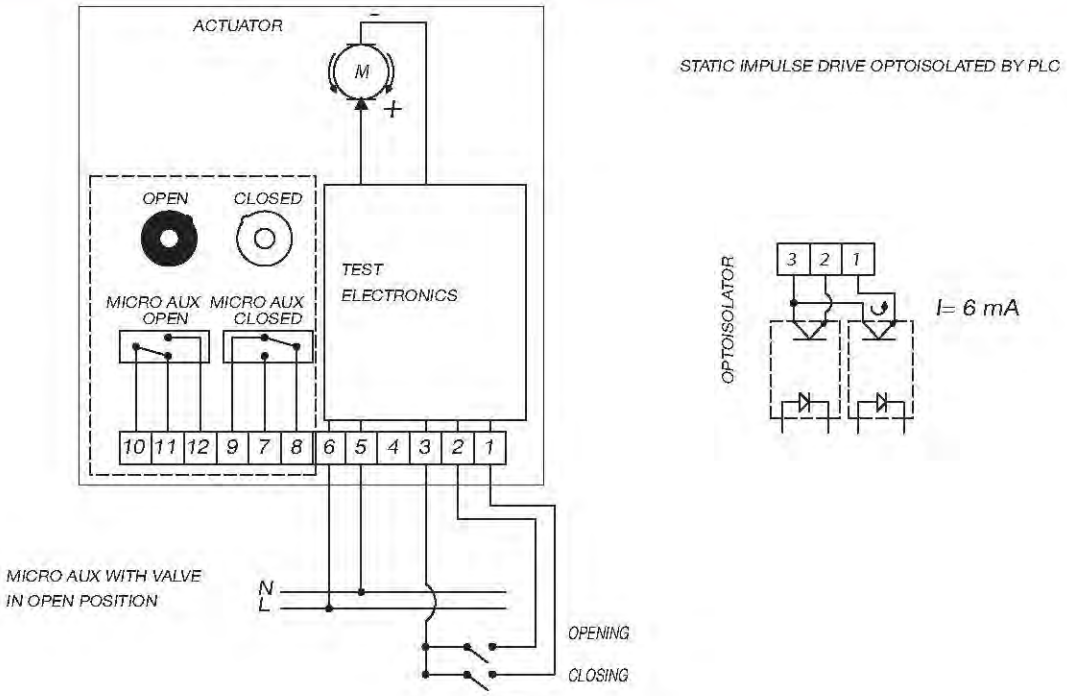

ELECTRIC SPECIFICATION FROM VB30 TO VB350 12V DC, 24V AC/DC. 110-240V AC

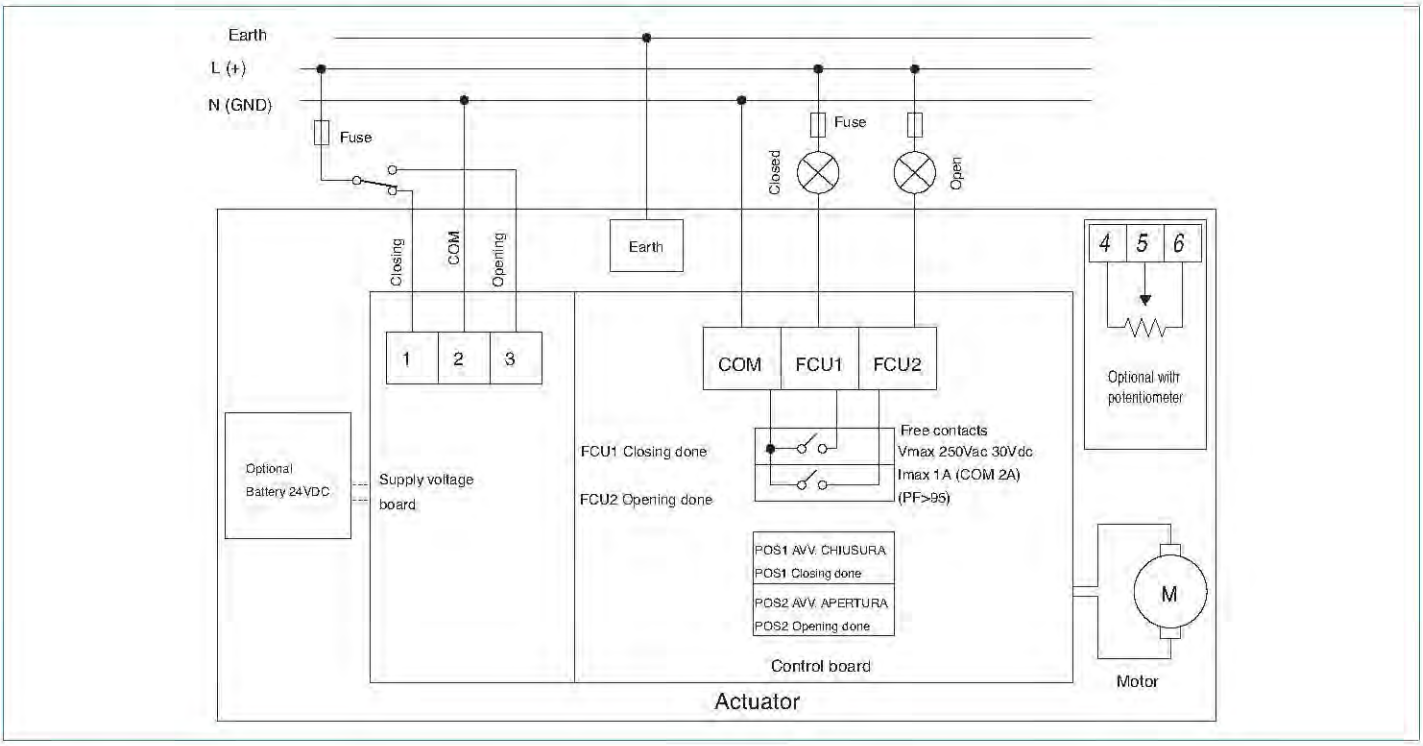

WIRING OF THE POSITIONER FROM VB30 TO VB350 12V DC, 24V AC/DC. 110-240V AC

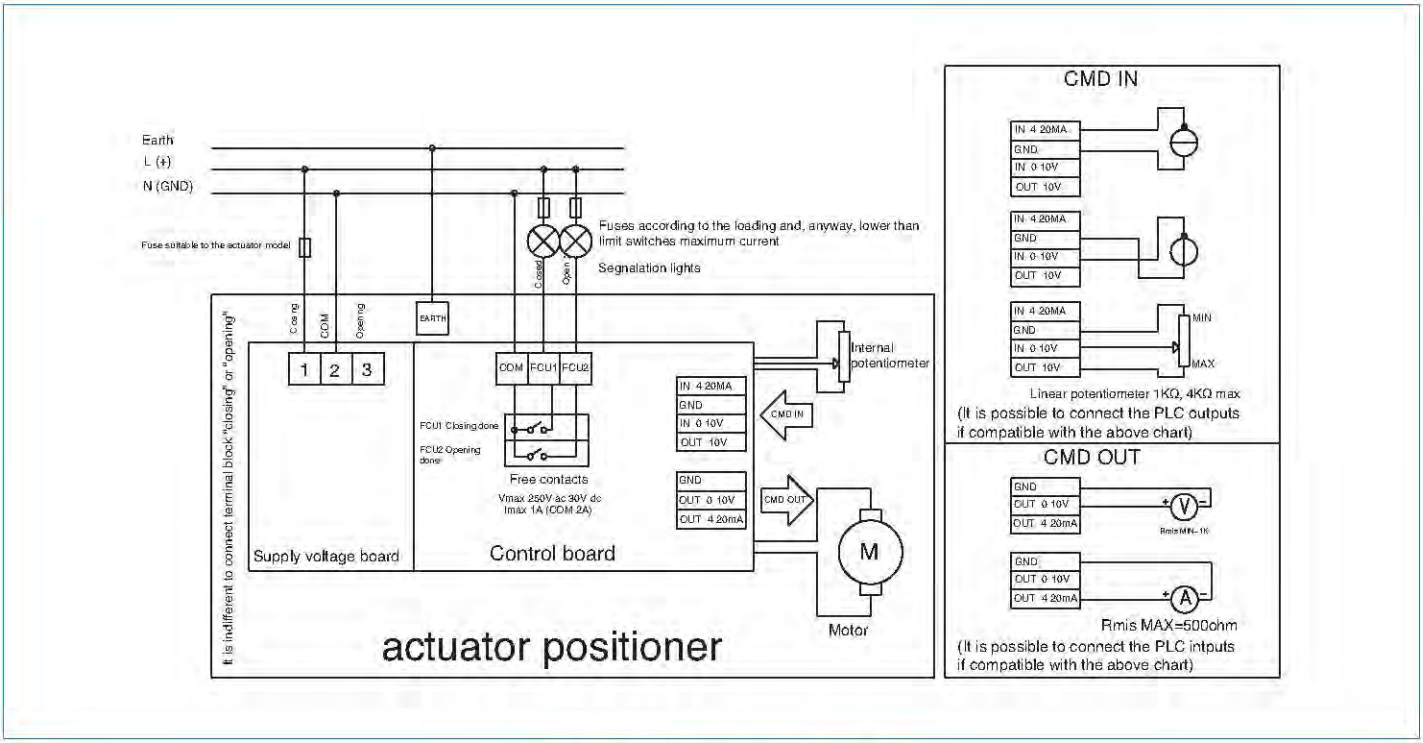

CARBON STEEL SQUARE ADAPTER

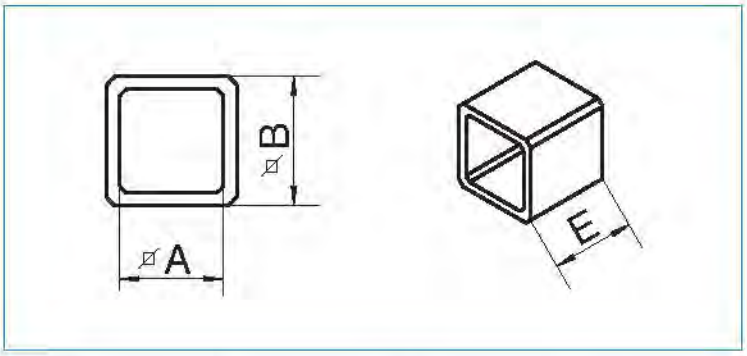

CODE	A	B	E
04400110901	0.35	0.43	0.39
04400141101	0.43	0.55	0.63
04400171101	0.43	0.67	0.67
04400171401	0.55	0.67	0.67
04400221701	0.67	0.87	0.87
04400272201	0.87	1.06	1.06
04400362701	1.06	1.42	1.42
* 04400271701	0.67	1.06	1.06

* Square 27x17 use adapter 27x22 + add 22x17

AISI 316 STAINLESS STEEL SQUARE ADAPTER

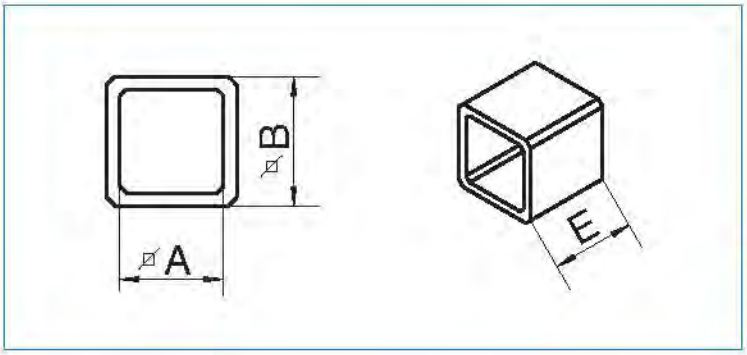

CODE	A	B	E
04400110902	0.35	0.43	0.39
04400140901	0.35	0.55	0.39
04400141102	0.43	0.55	0.63
04400171402	0.55	0.67	0.67
04400221702	0.67	0.87	0.87
04400272202	0.87	1.06	1.06
04400362702	1.06	1.42	1.42

SERIES 8E064*** - 8E068***

to 1/4" from 2"

PSI	600	600	600	600	600	600	600	600	600	600	600
DN / A	1/4"	3/8"	1/2"	3/4"	1"	1"1/4	1"1/2	2"	2"1/2	3"	4"
B	7.51	7.51	7.51	7.72	8.33	8.65	11.36	12.08	14.20	14.99	17.00
C	6.85	6.85	6.85	6.93	7.36	7.50	9.92	10.28	11.94	12.31	13.73
D	4.84	4.84	4.84	4.84	4.84	4.84	6.18	6.18	7.28	7.28	8.31
E	6.41	6.41	6.41	6.41	6.41	6.41	7.50	7.50	8.43	8.43	9.33
F	1.67	1.67	1.67	1.67	1.67	1.67	2.38	2.38	2.66	2.66	3.31
G	4.74	4.74	4.74	4.74	4.74	4.74	5.12	5.12	5.77	5.77	6.02
H	2.64	2.64	2.64	3.00	3.35	3.66	4.13	4.80	6.10	6.89	8.03
ACT.	VB 015	VB 015	VB 015	VB 015	VB 015	VB 015	VB 030	VB 030	VB 060	VB 060	VB 110

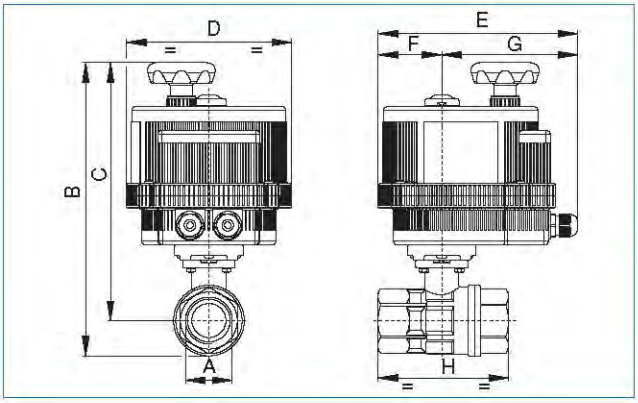

VOLTAGE SUFFIX		
	VOLTAGE SUFFIX	VOLTAGE
STANDARD	001	12V AC/DC
	002	24V AC/DC
	003	100-240 VAC
	004*	220VAC
FAIL-SAFE	012	24V AC/DC
	013	100-240 VAC
POSITIONER	021	12V AC/DC
	022	24V AC/DC
	023	100-240 VAC

*VB015

SERIES 8E067***

PSI	1000	1000	1000	1000	1000	1000
DN / A	1/2"	3/4"	1"	1"1/4	1"1/2	2"
B	7.53	7.75	8.33	8.73	11.40	12.15
C	6.85	6.93	7.32	7.46	9.88	10.24
D	4.84	4.84	4.84	4.84	6.18	6.18
E	6.41	6.41	6.41	6.41	7.50	7.50
F	1.67	1.67	1.67	1.67	2.38	2.38
G	4.74	4.74	4.74	4.74	5.12	5.12
H	2.64	3.07	3.54	3.94	4.41	5.32
ACT.	VB 015	VB 015	VB 015	VB 015	VB 030	VB 030

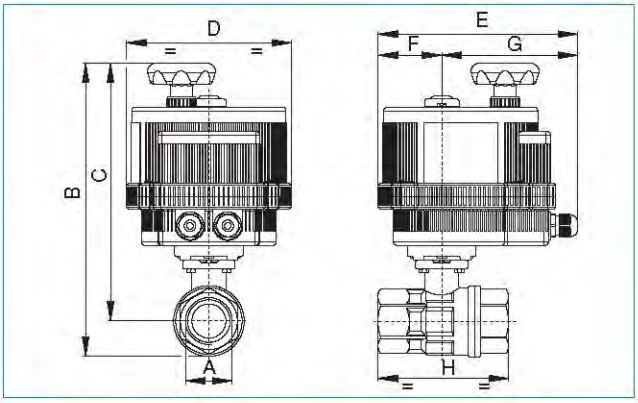

VOLTAGE SUFFIX		
	VOLTAGE SUFFIX	VOLTAGE
STANDARD	001	12V AC/DC
	002	24V AC/DC
	003	100-240 VAC
	004*	220VAC
FAIL-SAFE	012	24V AC/DC
	013	100-240 VAC
POSITIONER	021	12V AC/DC
	022	24V AC/DC
	023	100-240 VAC

*VB015

SERIES 8E065(T) ***
8E066(L) ***

PSI	400	400	400	400	400	400	400	400	400	400
DN / A	1/4"	3/8"	1/2"	3/4"	1"	1"1/4	1"1/2	2"	2"1/2	3"
B	7.44	7.44	7.44	7.63	9.98	10.43	11.16	13.05	14	14.04
C	6.77	6.77	6.77	6.86	9.03	9.25	9.74	11.36	11.81	11.81
D	4.84	4.84	4.84	4.84	6.18	6.18	6.18	7.38	7.28	7.28
E	6.41	6.41	6.41	6.41	7.50	7.50	7.50	8.43	8.43	8.43
F	1.67	1.67	1.67	1.67	2.38	2.38	2.38	2.66	2.66	2.66
G	4.74	4.74	4.74	4.74	5.12	5.12	5.12	5.77	5.77	5.77
H	2.64	2.64	2.87	3.19	3.74	4.39	4.86	5.73	6.93	7.08
I	1.32	1.32	1.44	1.60	1.87	2.20	2.43	2.87	3.47	3.54
ACT.	VB 015	VB 015	VB 015	VB 015	VB 030	VB 030	VB 030	VB 060	VB 060	VB 060

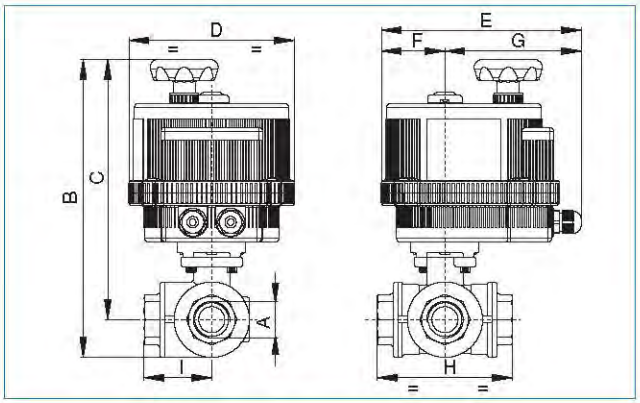

VOLTAGE SUFFIX		
	VOLTAGE SUFFIX	VOLTAGE
STANDARD	001	12V AC/DC
	002	24V AC/DC
	003	100-240 VAC
	004*	220VAC
FAIL-SAFE	012	24V AC/DC
	013	100-240 VAC
POSITIONER	021	12V AC/DC
	022	24V AC/DC
	023	100-240 VAC

*VB015

SERIES 8E069(T) ***
8E070(L) ***
8E071(T) ***
8E072(L) ***

	PSI	1000	1000	1000	1000	1000	800	800	800
FULL PORT	DN / A	1/4"	3/8"	1/2"	3/4"	1"	1"1/4	1"1/2	2"
STANDARD PORT	DN / A	-	1/2"	3/4"	1"	1"1/4	1"1/2	2"	-
	B	7.80	7.80	9.96	10.15	11.97	12.47	13.90	15.13
	C	7.02	7.02	9.05	9.05	10.64	10.94	12.02	12.77
	D	4.84	4.84	6.18	6.18	7.28	7.28	8.31	8.31
	E	6.41	6.41	7.50	7.50	8.43	8.43	9.33	9.33
	F	1.67	1.67	2.38	2.38	2.66	2.66	3.31	3.31
	G	4.74	4.74	5.12	5.12	5.77	5.77	6.02	6.02
	H	2.83	2.83	3.26	3.89	4.40	4.92	5.86	6.85
	I	1.41	1.41	1.63	1.94	2.20	2.46	2.93	3.42
	ACT.	VB 015	VB 015	VB 030	VB 030	VB 060	VB 060	VB 110	VB 190

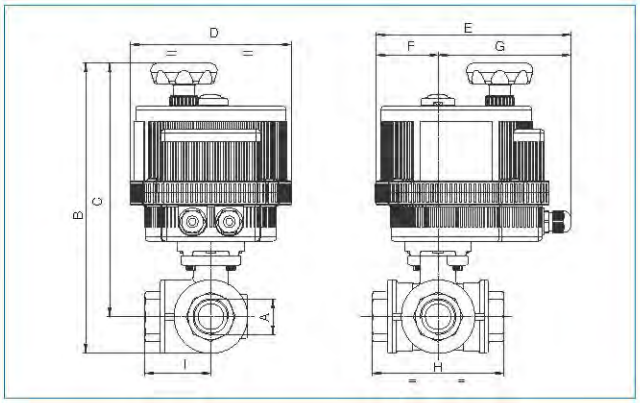

VOLTAGE SUFFIX		
	VOLTAGE SUFFIX	VOLTAGE
STANDARD	001	12V AC/DC
	002	24V AC/DC
	003	100-240 VAC
	004*	220VAC
FAIL-SAFE	012	24V AC/DC
	013	100-240 VAC
POSITIONER	021	12V AC/DC
	022	24V AC/DC
	023	100-240 VAC

*VB015

SERIES E500S***

Wt/Lbs	9.9	10.6	12.2	13.5	18.1	22.7	28.00	39.9	55.5	*
SIZE	1 1/2"	2"	2 1/2"	3"	4"	5"	6"	8"	10"	12"
A	13.11	13.40	14.29	14.53	16.33	16.80	18.04	19.38	20.69	*
B	16.08	16.89	17.79	18.27	20.82	21.80	23.51	26.27	26.68	*
C	4.74	4.74	5.49	6.00	7.50	8.50	9.50	11.75	14.25	17.00
D	6.18	6.18	6.18	6.18	7.28	7.28	8.31	8.31	8.74	*
E	7.50	7.50	7.50	7.50	8.43	8.43	9.33	9.33	9.72	*
F	2.38	2.38	2.38	2.66	2.66	3.31	3.31	3.03	3.03	*
G	5.12	5.12	5.12	5.12	5.77	6.02	6.02	6.02	6.69	*
H	1.61	1.65	1.76	1.78	2.05	2.14	2.20	2.34	2.58	3.03
N°	4	4	4	4	4	4	4	4	4	4
ØD2	0.75	0.75	0.75	0.75	0.75	0.87	0.87	0.87	1.00	1.00
ØD1	1.67	2.02	2.54	3.10	4.09	4.85	6.13	7.97	9.86	11.87
ACT.	VB 030	VB 030	VB 030	VB 030	VB 060	VB 110	VB 110	VB 190	VB 350	*

* Consult factory

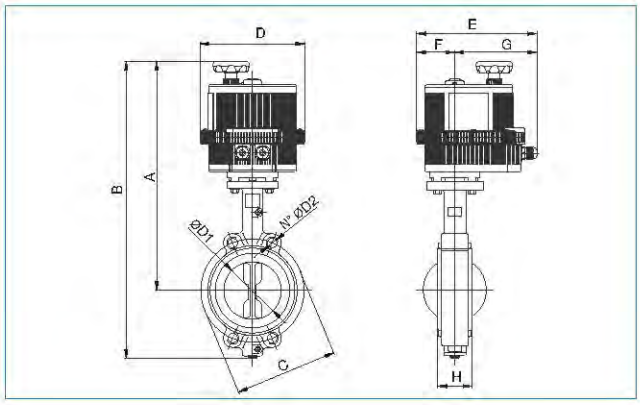

VOLTAGE SUFFIX		
	VOLTAGE SUFFIX	VOLTAGE
STANDARD	001	12V AC/DC
	002	24V AC/DC
	003	100-240 VAC
	004*	220VAC
FAIL-SAFE	012	24V AC/DC
	013	100-240 VAC
POSITIONER	021	12V AC/DC
	022	24V AC/DC
	023	100-240 VAC

*VB015

SERIES E500N***

Wt/Lbs	9.9	10.6	12.2	13.5	18.1	22.7	28.00	39.9	55.5	*
SIZE	1 1/2"	2"	2 1/2"	3"	4"	5"	6"	8"	10"	12"
A	13.11	13.40	14.29	14.53	16.33	16.80	18.04	19.38	20.69	*
B	16.08	16.89	17.79	18.27	20.82	21.80	23.51	26.27	26.68	*
C	4.74	4.74	5.49	6.00	7.50	8.50	9.50	11.75	14.25	17.00
D	6.18	6.18	6.18	6.18	7.28	7.28	8.31	8.31	8.74	*
E	7.50	7.50	7.50	7.50	8.43	8.43	9.33	9.33	9.72	*
F	2.38	2.38	2.38	2.66	2.66	3.31	3.31	3.03	3.03	*
G	5.12	5.12	5.12	5.12	5.77	6.02	6.02	6.02	6.69	*
H	1.61	1.65	1.76	1.78	2.05	2.14	2.20	2.34	2.58	3.03
N°	4	4	4	4	4	4	4	4	4	4
ØD2	0.75	0.75	0.75	0.75	0.75	0.87	0.87	0.87	1.00	1.00
ØD1	1.67	2.02	2.54	3.10	4.09	4.85	6.13	7.97	9.86	11.87
ACT.	VB 030	VB 030	VB 030	VB 030	VB 060	VB 110	VB 110	VB 190	VB 350	*

* Consult factory

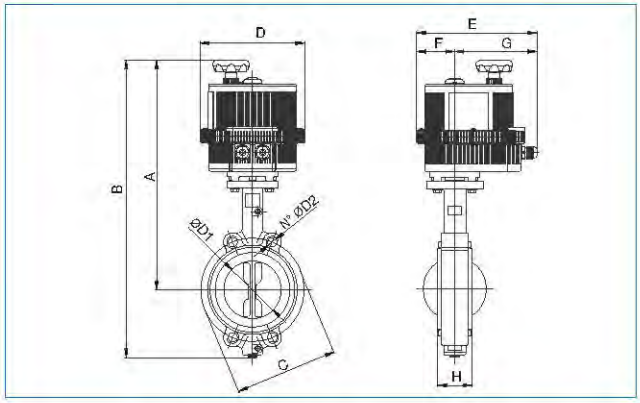

VOLTAGE SUFFIX		
	VOLTAGE SUFFIX	VOLTAGE
STANDARD	001	12V AC/DC
	002	24V AC/DC
	003	100-240 VAC
	004*	220VAC
FAIL-SAFE	012	24V AC/DC
	013	100-240 VAC
POSITIONER	021	12V AC/DC
	022	24V AC/DC
	023	100-240 VAC

*VB015

SERIES E501S ***

Wt/Lbs	12.2	13.5	14.4	15.5	27.1	31.3	42.1	50.90	72.4	*
SIZE	1 1/2"	2"	2 1/2"	3"	4"	5"	6"	8"	10"	12"
A	13.11	13.40	14.29	14.53	16.33	16.80	18.04	19.38	20.69	*
B	16.08	16.89	17.79	18.27	20.82	21.80	23.51	26.27	26.68	*
C	4.74	4.74	5.49	6.00	7.50	8.50	9.50	11.75	14.25	17.00
D	6.18	6.18	6.18	6.18	7.28	7.28	8.31	8.31	8.74	*
E	7.50	7.50	7.50	7.50	8.43	8.43	9.33	9.33	9.72	*
F	2.38	2.38	2.38	2.66	2.66	3.31	3.31	3.03	3.03	*
G	5.12	5.12	5.12	5.12	5.77	6.02	6.02	6.02	6.69	*
H	1.61	1.65	1.76	1.78	2.05	2.14	2.20	2.34	2.58	3.03
N°	4	4	4	4	8	8	8	8	12	12
TH	5/8-11	5/8-11	5/8-11	5/8-11	5/8-11	3/4-10	3/4-10	3/4-10	7/8-9	7/8-9
ØD1	1.67	2.02	2.54	3.10	4.09	4.85	6.13	7.97	9.86	11.87
ACT.	VB 030	VB 030	VB 030	VB 030	VB 060	VB 060	VB 110	VB 190	VB 350	*

* Consult factory

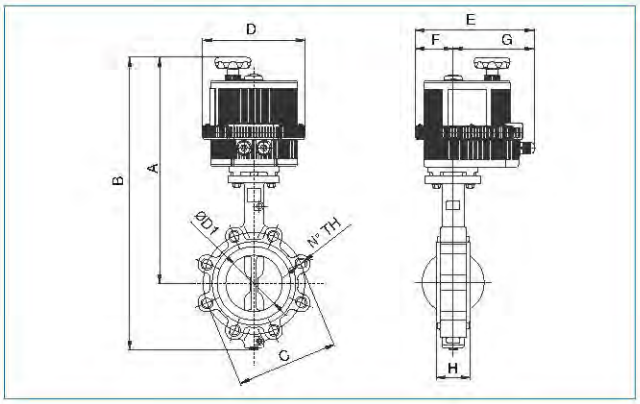

VOLTAGE SUFFIX		
	VOLTAGE SUFFIX	VOLTAGE
STANDARD	001	12V AC/DC
	002	24V AC/DC
	003	100-240 VAC
	004*	220VAC
FAIL-SAFE	012	24V AC/DC
	013	100-240 VAC
POSITIONER	021	12V AC/DC
	022	24V AC/DC
	023	100-240 VAC

*VB015

SERIES E501N ***

Wt/Lbs	12.2	13.5	14.4	15.5	27.1	31.3	42.1	50.90	72.4	*
SIZE	1 1/2"	2"	2 1/2"	3"	4"	5"	6"	8"	10"	12"
A	13.11	13.40	14.29	14.53	16.33	16.80	18.04	19.38	20.69	*
B	16.08	16.89	17.79	18.27	20.82	21.80	23.51	26.27	26.68	*
C	4.74	4.74	5.49	6.00	7.50	8.50	9.50	11.75	14.25	17.00
D	6.18	6.18	6.18	6.18	7.28	7.28	8.31	8.31	8.74	*
E	7.50	7.50	7.50	7.50	8.43	8.43	9.33	9.33	9.72	*
F	2.38	2.38	2.38	2.66	2.66	3.31	3.31	3.03	3.03	*
G	5.12	5.12	5.12	5.12	5.77	6.02	6.02	6.02	6.69	*
H	1.61	1.65	1.76	1.78	2.05	2.14	2.20	2.34	2.58	3.03
N°	4	4	4	4	8	8	8	8	12	12
TH	5/8-11	5/8-11	5/8-11	5/8-11	5/8-11	3/4-10	3/4-10	3/4-10	7/8-9	7/8-9
ØD1	1.67	2.02	2.54	3.10	4.09	4.85	6.13	7.97	9.86	11.87
ACT.	VB 030	VB 030	VB 030	VB 030	VB 060	VB 060	VB 110	VB 190	VB 350	*

* Consult factory

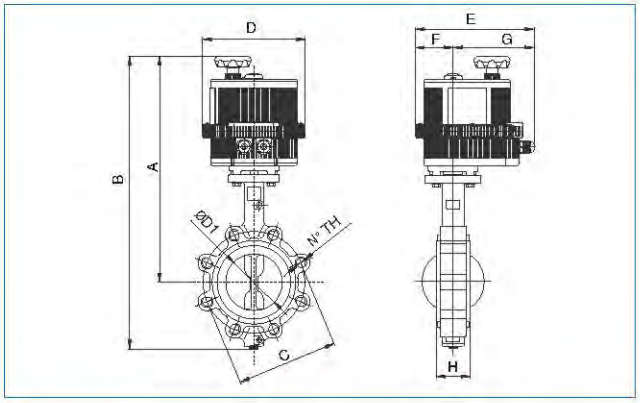

VOLTAGE SUFFIX		
	VOLTAGE SUFFIX	VOLTAGE
STANDARD	001	12V AC/DC
	002	24V AC/DC
	003	100-240 VAC
	004*	220VAC
FAIL-SAFE	012	24V AC/DC
	013	100-240 VAC
POSITIONER	021	12V AC/DC
	022	24V AC/DC
	023	100-240 VAC

*VB015

PRESSURE - TEMPERATURE CHART FOR BUTTERFLY VALVES

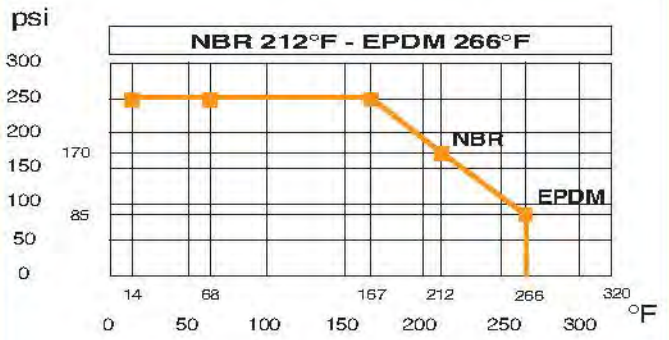

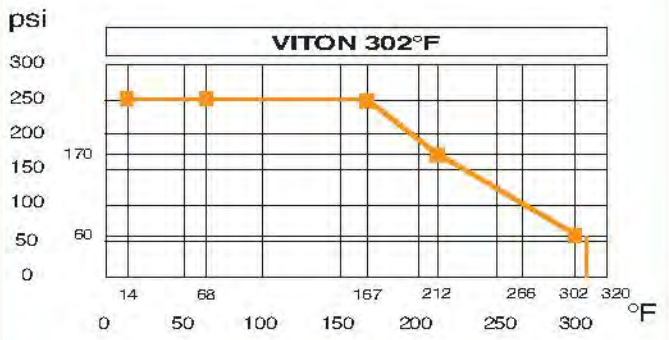

FLOW-RATE CHART FOR BUTTERFLY VALVES

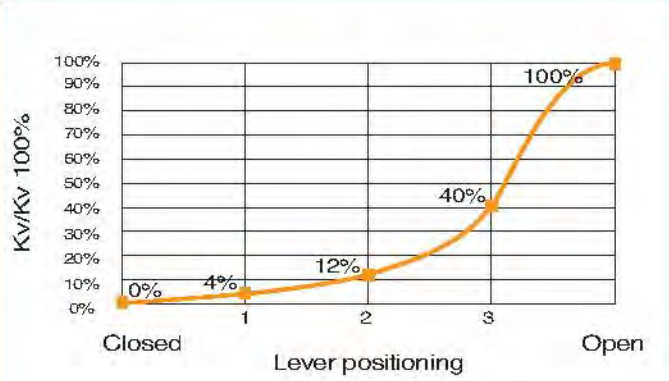

PRESSURE - TEMPERATURE CHART CHECK VALVES

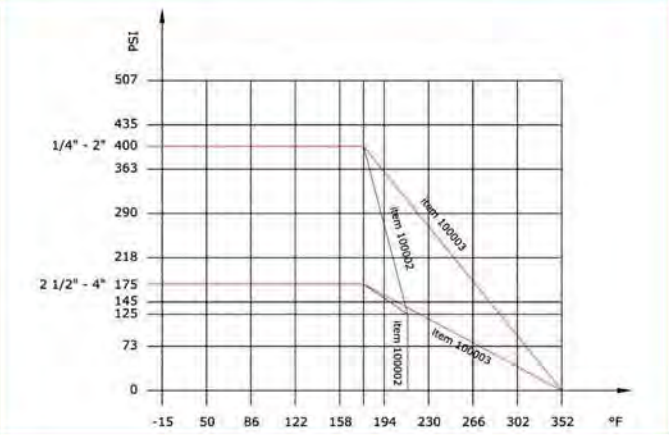

FLOW-RATE CHART FOR CHECK VALVES

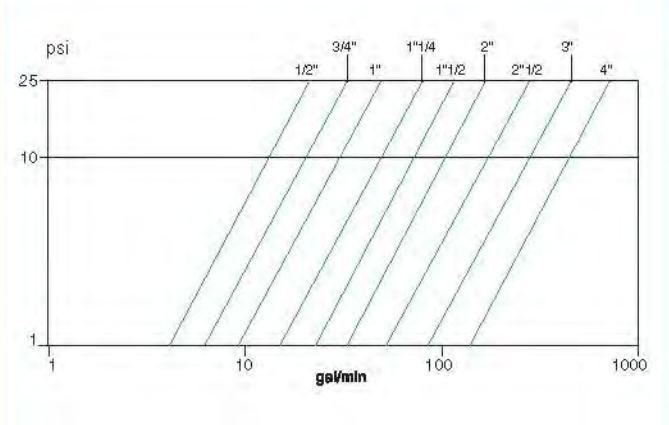

For Art. 100202

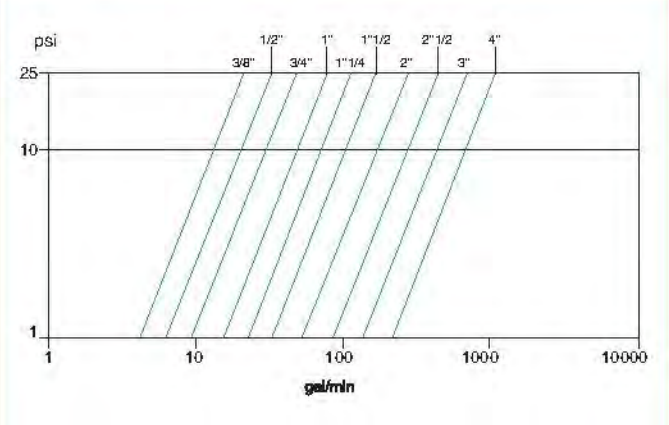

For Art. 100002-100003

PRESSURE - TEMPERATURE CHART FOR BALL VALVES

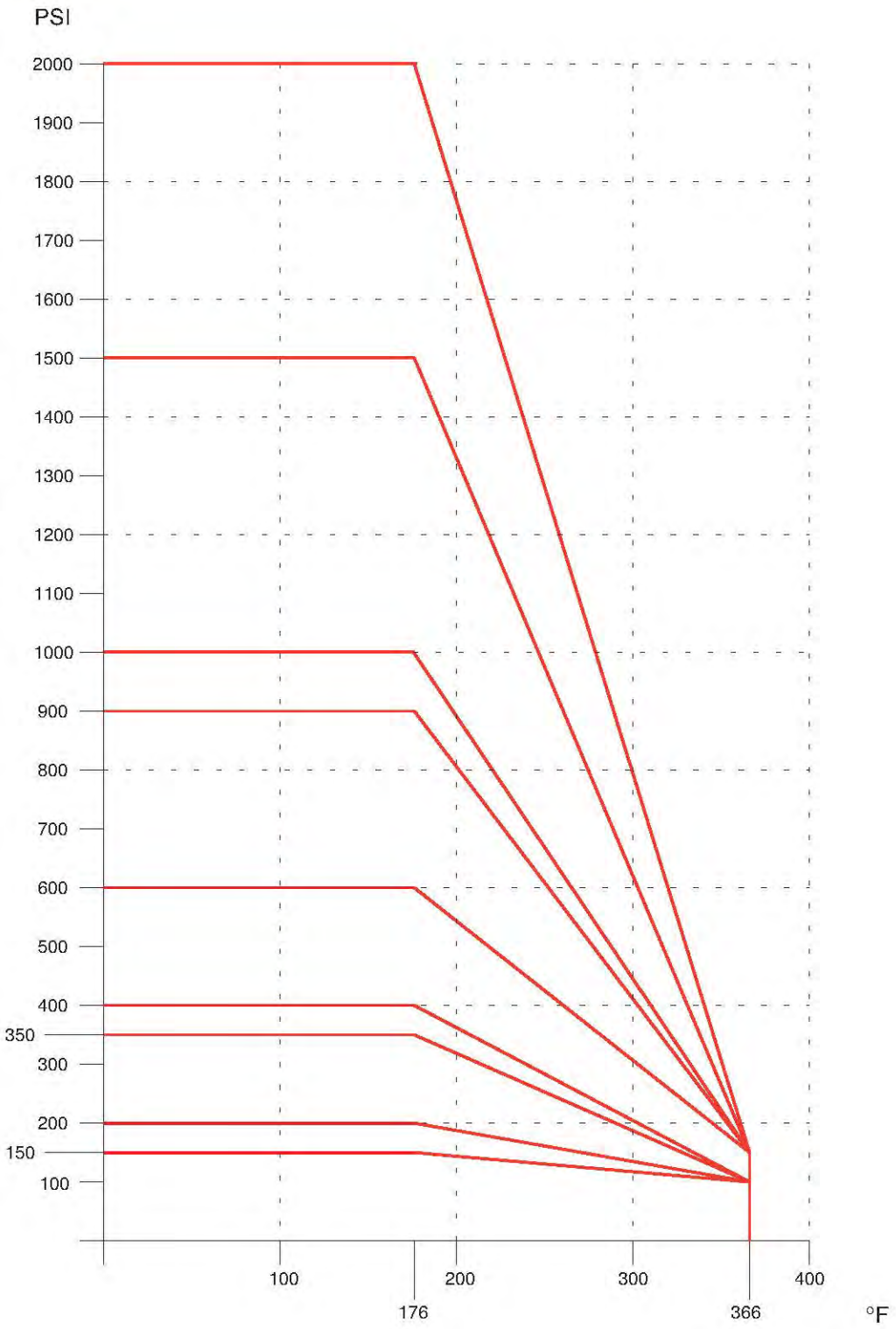

TORQUE VALUES OF STEEL AND BRASS VALVES

VALUES IN in-Lbs

Break Torque

The torque values (in-Lbs) shown in the table were measured at the test bench under following conditions:
TEMPERATURE: 68°F.
PRESSURE: 0/2000 psi.
FLUID: Demineralized water.

Steel (all series)

SIZES	15 psi	100 psi	150 psi	200 psi	350 psi	600 psi	900 psi	1500 psi	2000 psi
3/8"	27	35	35	35	44	44	44	53	53
1/2"	27	35	35	35	44	44	44	53	53
3/4"	106	115	115	133	142	159	177	195	-
1"	115	124	124	133	150	168	186	204	-
1"1/4	133	150	150	168	186	204	221	-	-
1"1/2	177	195	195	212	239	257	283	-	-
2"	257	283	292	310	345	372	416	-	-
2"1/2	487	540	540	593	646	-	-	-	-
3"	575	637	637	699	770	-	-	-	-
4"	797	956	956	1053	1159	-	-	-	-
5"	850	1018	1018	1124	1239	-	-	-	-
6"	1611	2903	2903	3186	3505	-	-	-	-
8"	2646	5824	5824	6408	-	-	-	-	-

Brass (all series except 250N-253N-355N-365N)

SIZES	15 psi	100 psi	150 psi	200 psi	350 psi	600 psi	900 psi	-	-
3/8"	48	55	55	64	64	72	72	-	-
1/2"	64	72	72	80	80	88	88	-	-
3/4"	127	135	135	143	143	151	151	-	-
1"	167	175	175	175	175	191	191	-	-
1"1/4	175	183	183	183	191	191	-	-	-
1"1/2	374	398	398	406	406	414	-	-	-
2"	382	406	430	446	470	510	-	-	-
2"1/2	478	510	566	613	693	765	-	-	-
3"	868	115	1147	1227	1386	1561	-	-	-
4"	1035	1274	1306	1386	1545	1721	-	-	-
-	-	-	-	-	-	-	-	-	-
-	-	-	-	-	-	-	-	-	-
-	-	-	-	-	-	-	-	-	-

N.B. The torque values may change depending on the fluid, temperature and working condition pressure.
N.B. For valves with integral seats, shown values must be doubled.

Running torque

The torque values (in-Lbs) shown in the table were measured after 2 cycles at the test bench under following conditions:
TEMPERATURE: 68°F.
PRESSURE: 0/2000 psi.
FLUID: Demineralized water.

Steel (all series)

SIZES	15 psi	100 psi	150 psi	200 psi	350 psi	600 psi	900 psi	1500 psi	2000 psi
3/8"	27	27	31	35	35	40	44	53	62
1/2"	40	40	49	58	62	66	71	75	80
3/4"	53	53	62	62	66	75	80	89	-
1"	62	66	71	75	75	80	89	106	-
1"1/4	62	80	89	97	102	115	-	-	-
1"1/2	97	159	159	168	186	221	-	-	-
2"	266	283	292	310	327	354	-	-	-
2"1/2	310	354	398	460	487	531	-	-	-
3"	620	655	681	735	912	1115	-	-	-
4"	841	991	1044	1142	1213	1460	-	-	-
5"	974	1637	1903	2478	2567	3540	-	-	-
6"	1460	2301	2832	3620	4222	5018	-	-	-
8"	1726	4337	5177	5576	-	-	-	-	-

Brass (all series except 250N-253N-355N-365N)

SIZES	15 psi	100 psi	150 psi	200 psi	350 psi	600 psi	900 psi	-	-
3/8"	24	24	28	32	32	36	40	-	-
1/2"	36	36	44	52	56	60	64	-	-
3/4"	48	48	56	56	60	68	72	-	-
1"	56	60	64	68	67	72	80	-	-
1"1/4	56	72	80	88	92	104	-	-	-
1"1/2	88	143	143	151	167	199	-	-	-
2"	239	255	263	279	295	319	-	-	-
2"1/2	279	319	358	414	438	478	-	-	-
3"	558	589	613	661	820	1004	-	-	-
4"	757	892	940	1028	1091	1314	-	-	-
-	-	-	-	-	-	-	-	-	-
-	-	-	-	-	-	-	-	-	-
-	-	-	-	-	-	-	-	-	-

N.B. The torque values may change depending on the fluid, temperature and working condition pressure.
N.B. For valves with integral seats, shown values must be doubled.

psi	bar	psi	bar	psi	bar	psi	bar	psi	bar
1	0.07	66	4.55	255	17.58	860	59.29	1510	104.10
2	0.14	67	4.62	260	17.92	870	59.98	1520	104.79
3	0.21	68	4.69	265	18.27	880	60.67	1530	105.48
4	0.28	69	4.76	270	18.61	890	61.36	1540	106.17
5	0.34	70	4.83	275	18.96	900	62.05	1550	106.86
6	0.41	71	4.89	280	19.30	910	62.74	1560	107.55
7	0.48	72	4.96	285	19.65	920	63.42	1570	108.24
8	0.55	73	5.03	290	19.99	930	64.11	1580	108.93
9	0.62	74	5.10	295	20.34	940	64.80	1590	109.61
10	0.69	75	5.17	300	20.68	950	65.49	1600	110.30
11	0.76	76	5.24	310	31.37	960	66.18	1610	110.99
12	0.83	77	5.31	320	22.06	970	66.87	1620	111.68
13	0.90	78	5.38	330	22.75	980	67.56	1630	112.37
14	0.97	79	5.45	340	23.44	990	68.25	1640	113.06
15	1.03	80	5.52	350	24.13	1000	68.94	1650	113.75
16	1.10	81	5.58	360	24.82	1010	69.63	1660	114.44
17	1.17	82	5.65	370	25.51	1020	70.32	1670	115.13
18	1.24	83	5.72	380	26.20	1030	71.01	1680	115.82
19	1.31	84	5.79	390	26.89	1040	71.70	1690	116.51
20	1.38	85	5.86	400	27.58	1050	72.39	1700	117.20
21	1.45	86	5.93	410	28.27	1060	73.08	1710	117.89
22	1.52	87	6.00	420	28.95	1070	73.77	1720	118.58
23	1.59	88	6.07	430	26.64	1080	74.46	1730	119.27
24	1.65	89	6.14	440	30.33	1090	75.14	1740	119.96
25	1.72	90	6.20	450	31.02	1100	75.83	1750	120.65
26	1.79	91	6.27	460	31.71	1110	76.52	1760	121.33
27	1.86	92	6.34	470	32.40	1120	77.21	1770	122.02
28	1.93	93	6.41	480	33.09	1130	77.90	1780	122.71
29	2.00	94	6.48	490	33.78	1140	78.59	1790	123.40
30	2.07	95	6.55	500	34.47	1150	79.28	1800	124.09
31	2.14	96	6.62	510	35.16	1160	79.97	1810	124.78
32	2.21	97	6.69	520	35.85	1170	80.66	1820	125.47
33	2.28	98	6.76	530	36.54	1180	81.35	1830	126.16
34	2.34	99	6.83	540	37.23	1190	82.04	1840	126.85
35	2.41	100	6.89	550	37.92	1200	82.73	1850	127.54
36	2.48	105	7.24	560	38.61	1210	83.42	1860	128.23
37	2.55	110	7.58	570	39.30	1220	84.11	1870	128.92
38	2.62	115	7.93	580	39.99	1230	84.80	1880	129.61
39	2.69	120	8.27	590	40.67	1240	85.49	1890	130.30
40	2.76	125	8.62	600	41.36	1250	86.18	1900	130.99
41	2.83	130	8.96	610	42.05	1260	86.86	1910	131.68
42	2.90	135	9.31	620	42.74	1270	87.55	1920	132.36
43	2.96	140	9.65	630	43.43	1280	88.24	1930	133.05
44	3.03	145	10.00	640	44.12	1290	88.93	1940	133.74
45	3.10	150	10.34	650	44.81	1300	89.62	1950	134.43
46	3.17	155	10.69	660	45.50	1310	90.31	1960	135.12
47	3.24	160	11.03	670	46.19	1320	91.00	1970	135.81
48	3.31	165	11.38	680	46.88	1330	91.69	1980	136.50
49	3.38	170	11.72	690	47.57	1340	92.38	1990	137.19
50	3.45	175	12.06	700	48.26	1350	93.07	2000	137.88
51	3.52	180	14.41	710	48.95	1360	93.76	2010	138.57
52	3.58	185	12.75	720	49.64	1370	94.45	2020	139.26
53	3.65	190	13.10	730	50.33	1380	95.14	2030	139.95
54	3.72	195	13.44	740	51.02	1390	95.83	2040	140.64
55	3.79	200	13.79	750	51.71	1400	96.52	2050	141.33
56	3.86	105	14.13	760	52.39	1410	97.21	2060	142.02
57	3.93	210	14.48	770	53.08	1420	97.89	2070	142.71
58	4.00	215	14.82	780	53.77	1430	98.58	2080	143.40
59	4.07	220	15.17	790	54.46	1440	99.27	2090	144.08
60	4.14	225	15.51	800	55.15	1450	99.96	2100	144.77
61	4.21	230	15.86	810	55.84	1460	100.65	2110	145.46
62	4.27	235	16.20	820	56.53	1470	101.34	2120	146.15
63	4.34	240	16.55	830	57.22	1480	102.03	2130	146.84
64	4.41	245	16.89	840	57.91	1490	102.72	2140	147.53
65	4.48	250	17.24	850	58.60	1500	103.41	2150	148.22

TEMPERATURE CONVERSION FROM °C TO °F

C°	Conv	F°	C°	Conv	F°	C°	Conv	F°	C°	Conv	F°	C°	Conv	F°
-46	-50	-58	-11	12	54	23	74	165	58	136	277	92	198	388
-45	-49	-56	-11	13	55	24	75	167	58	137	279	93	199	390
-44	-48	-54	-10	14	57	24	76	169	59	138	280	93	200	392
-44	-47	-53	-9	15	59	5	77	171	59	139	282	94	201	394
-43	-46	-51	-9	16	61	26	78	172	60	140	284	94	202	396
-43	-45	-49	-8	17	63	26	79	174	61	141	286	95	203	397
-42	-44	-47	-8	18	64	27	80	176	61	142	288	96	204	399
-42	-43	-45	-7	19	66	27	81	178	62	143	289	96	205	401
-41	-42	-44	-7	20	68	28	82	180	62	144	291	97	206	403
-41	-41	-42	-6	21	70	28	83	181	63	145	293	97	207	405
-40	-40	-40	-6	22	72	29	84	183	63	146	295	98	208	406
-39	-39	-38	-5	23	73	29	85	185	64	147	297	98	209	408
-39	-38	-36	-4	24	75	20	86	187	64	148	298	99	210	410
-38	-37	-35	-4	25	77	31	87	789	65	149	300	99	211	412
-38	-36	-33	-3	26	79	31	88	190	66	150	302	100	212	414
-37	-35	-31	-3	27	81	32	89	192	66	151	304	101	213	415
-37	-34	-29	-2	28	82	32	90	194	67	152	306	101	214	417
-36	-33	-27	-2	29	84	33	91	196	67	153	307	102	215	419
-36	-32	-26	-1	30	86	33	92	198	68	154	309	102	216	421
-35	-31	-24	-1	31	88	34	93	199	68	155	311	103	217	423
-34	-30	-22	0	32	90	34	94	201	69	156	313	103	218	424
-34	-29	-20	1	33	91	35	95	203	69	157	315	104	219	426
-33	-28	-18	1	34	93	36	96	205	70	158	316	104	220	428
-33	-27	-17	2	35	95	36	97	207	71	159	318	105	221	430
-32	-26	-15	2	36	97	37	98	208	71	160	320	106	222	432
-32	-25	-13	3	37	99	37	99	210	71	161	322	106	223	433
-31	-24	-11	3	38	100	38	100	212	72	162	324	107	224	435
-31	-23	-9	4	39	102	38	101	214	73	163	325	107	225	437
-30	-22	-8	4	40	104	39	102	216	73	164	327	108	226	439
-29	-21	-6	5	41	106	39	103	217	74	165	329	108	227	441
-29	-20	-4	6	42	108	40	104	219	74	166	331	109	228	442
-28	-19	-2	6	43	109	41	105	221	75	167	333	109	229	444
-28	-18	0	7	44	111	41	106	223	76	168	334	110	230	446
-27	-17	1	7	45	113	42	107	225	76	169	336	111	231	448
-27	-16	3	8	46	115	42	108	226	77	170	338	111	232	450
-26	-15	5	8	47	117	43	109	228	77	171	340	112	233	451
-26	-14	7	9	48	118	43	110	230	78	172	342	112	234	453
-25	-13	9	9	49	120	44	111	232	78	173	343	113	235	455
-24	-12	10	10	50	122	44	112	234	79	174	345	113	236	457
-24	-11	12	11	51	124	45	113	235	79	175	347	114	237	459
-23	-10	14	11	52	126	46	114	237	80	176	349	114	238	460
-23	-9	16	12	53	127	46	115	239	81	177	351	115	239	462
-22	-8	18	12	54	129	47	116	241	81	178	352	116	240	464
-22	-7	19	13	55	131	47	117	243	82	179	354	116	241	466
-21	-6	21	13	56	133	48	118	244	82	180	356	117	242	468
-21	-5	23	14	57	135	48	119	246	83	181	358	117	243	469
-20	-4	25	14	58	136	49	120	248	83	152	360	118	244	471
-19	-3	27	15	59	138	49	121	250	84	183	361	118	245	473
-19	-2	28	16	60	140	50	122	252	84	184	363	119	246	475
-18	-1	30	16	61	142	51	123	253	85	185	365	119	247	477
-18	0	32	17	62	144	51	124	255	86	186	367	120	248	478
-17	1	34	17	63	145	52	125	257	86	187	369	121	249	480
-17	2	36	18	64	147	52	126	259	87	188	370	121	250	482
-16	3	37	18	65	149	53	127	261	87	189	372	122	251	484
-16	4	39	19	66	151	53	128	262	88	190	374	122	252	486
-15	5	41	19	67	153	54	129	264	88	191	376	123	253	487
-14	6	43	20	68	154	54	130	266	89	192	378	123	254	489
-14	7	45	21	69	156	55	131	268	89	193	379	124	255	491
-13	8	46	21	70	158	56	132	270	90	194	381	124	256	493
-13	9	48	22	71	160	56	133	271	91	195	383	125	257	495
-12	10	50	22	72	162	57	134	273	91	196	385	126	258	496
-12	11	52	23	73	163	57	135	275	92	197	387	126	259	498

USE OF THE TABLE

Please always refer to the column in the middle (conv. column). If the temperature you need to convert is in Celsius degrees you get the corresponding Fahrenheit temperature by reading the data on its right, while if it is a Fahrenheit temperature you get the Celsius one on the left side.

The general conversion formulas are:

$$F° = \frac{9}{5}\,°C + 32 \qquad °C = \frac{5}{9}\,(°F - 32)$$

NOTES:

1. INLET AND OUTLET: 2" MNPT OR BSPT (ISO-R)
2. SUCTION PORT: 1.25" MNPT OR BSPT (ISO-R)
3. MATERIAL: GLASS REINFORCED POLYPROPYLENE OR PVDF (KYNAR)
4. MAXIMUM TEMPERATURE RATING:
   POLYPROPYLENE: 150 F. (65.5 C.)
   PVDF (KYNAR): 200 F. (93.3 C.)
5. MAXIMUM PRESSURE RATING AT 68 F. (20 C.)
   POLYPROPYLENE: 150 PSIG (10.3 BAR)
   PVDF (KYNAR): 200 PSIG (13.8 BAR)

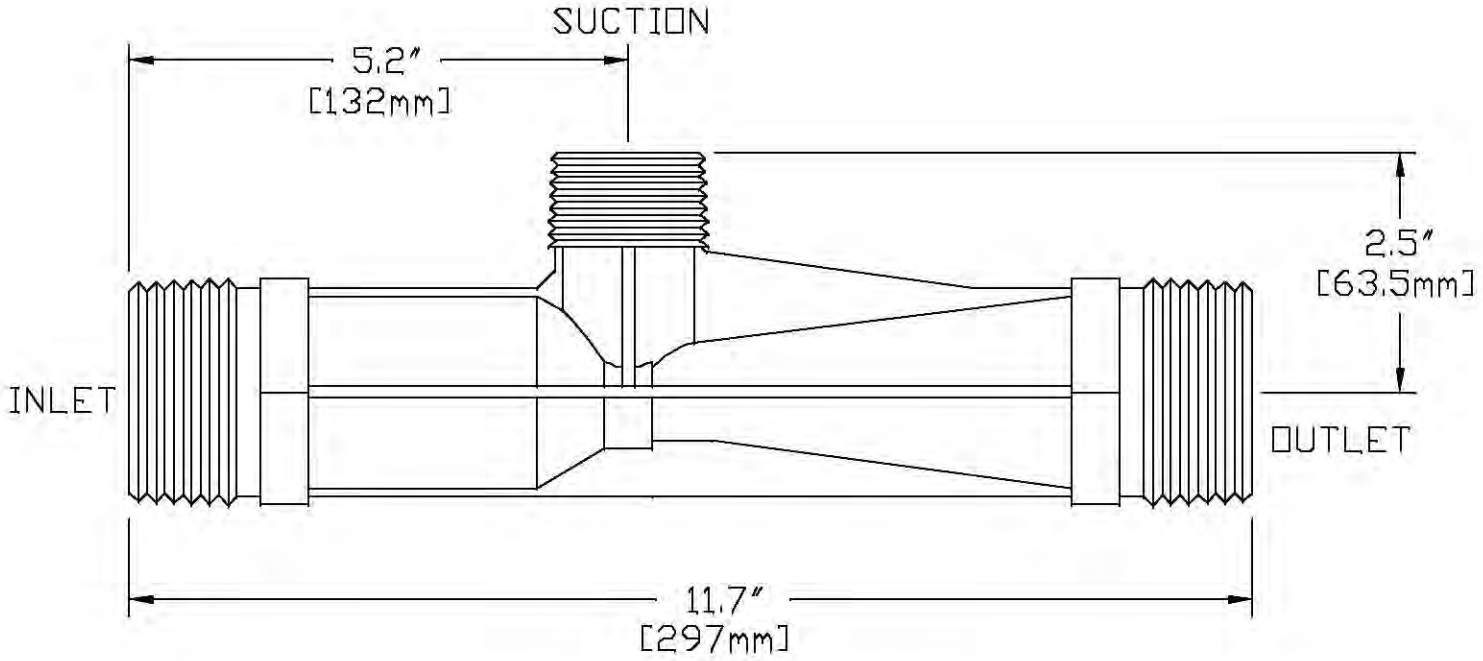

Covered By United States Patent No. 5,863,128
International Patents Pending

Mazzei
Mazzei Injector Company, LLC
500 Rooster Drive, Bakersfield, CA 93307
Tel: 661.363.6500 Fax: 661.363.7500

DATE	12-19-00	TITLE MODEL 2081-A INJECTOR
DRAWN BY	JRM	
REVIEWED BY	RST	NUMBER JRM-22 / SIZE / REV.
SCALE	NONE	
MATERIALS: SEE NOTES		PAGE (1) OF (1)

Mazzei Injector Company, LLC- Injector Performance Table

Injector Model **2081** 7/22/2004

Operating Pressure PSIG		Water Suction		Operating Pressure PSIG		Water Suction	
Injector Inlet	Injector Outlet	Motive Flow GPM	Water Suction GPH	Injector Inlet	Injector Outlet	Motive Flow GPM	Water Suction GPH
5	0	34	630	**60**	0	119	631
	1		630		5		631
	2		630		10		631
	3		215		15		631
	4		136		20		631
10	0	48	630		30		600
	2		630		35		509
	5		468		40		381
	7		149		45		217
	8		30	**70**	0	128	631
15	0	59	631		5		631
	5		623		10		631
	7		576		15		631
	10		213		20		631
	12		77		30		631
20	0	68	631		40		529
	5		631		45		440
	10		468		50		326
	12		299		55		142
	15		152	**80**	0	137	631
25	0	77	631		5		631
	5		631		10		631
	10		627		15		631
	15		404		20		631
	20		134		30		631
30	0	84	631		40		604
	5		631		50		506
	10		631		60		270
	15		511		65		61
	20		341	**90**	0	145	631
	25		62		5		631
35	0	91	631		10		631
	5		631		20		631
	10		631		30		631
	15		627		40		631
	20		460		50		602
	25		256		60		459
40	0	97	631		70		179
	5		631		75		
	10		631	**100**	0	153	631
	15		631		5		631
	20		524		10		631
	25		394		20		631
	30		169		30		631
45	0	103	631		40		631
	5		631		50		622
	10		631		60		594
	15		631		70		412
	20		607		80		121
	25		508	**120**	0	158	631
	30		341		5		631
	35		149		10		631
50	0	108	631		20		631
	5		631		30		631
	10		631		40		631
	15		631		50		631
	20		631		60		612
	25		588		70		595
	30		453		80		523
	35		300		90		309
	40		115		100		

Copyright Mazzei Injector Company, LLC June 2010
500 Rooster Dr Bakersfield CA USA 661-363-6500 FAX 661-363-7500

Mazzei Injector Company, LLC - Injector Performance Table

Injector Model **2081** 7/22/2004

Operating Pressure kg/cm2		Water Suction		Operating Pressure kg/cm2		Water Suction	
Injector Inlet	Injector Outlet	Motive Flow l/min	Water Suction LPH	Injector Inlet	Injector Outlet	Motive Flow l/min	Water Suction LPH
0.35	0.00	130	2384	**4.22**	0.00	449	2387
	0.07		2384		0.35		2387
	0.14		2384		0.70		2387
	0.21		812		1.05		2387
	0.28		514		1.41		2387
0.70	0.00	183	2384		2.11		2273
	0.14		2384		2.46		1925
	0.35		1770		2.81		1441
	0.49		565		3.16		820
	0.56		114	**4.92**	0.00	485	2387
1.05	0.00	224	2387		0.35		2387
	0.35		2359		0.70		2387
	0.49		2182		1.05		2387
	0.70		807		1.41		2387
	0.84		290		2.11		2387
1.41	0.00	259	2387		2.81		2002
	0.35		2387		3.16		1667
	0.70		1772		3.52		1235
	0.84		1130		3.87		538
	1.05		574	**5.62**	0.00	518	2387
1.76	0.00	290	2387		0.35		2387
	0.35		2387		0.70		2387
	0.70		2372		1.05		2387
	1.05		1529		1.41		2387
	1.41		508		2.11		2387
2.11	0.00	317	2387		2.81		2287
	0.35		2387		3.52		1915
	0.70		2387		4.22		1020
	1.05		1935		4.57		230
	1.41		1292	**6.33**	0.00	550	2387
	1.76		234		0.35		2387
2.46	0.00	343	2387		0.70		2387
	0.35		2387		1.41		2387
	0.70		2387		2.11		2387
	1.05		2372		2.81		2387
	1.41		1741		3.52		2278
	1.76		968		4.22		1736
2.81	0.00	366	2387		4.92		678
	0.35		2387		5.27		
	0.70		2387	**7.03**	0.00	579	2387
	1.05		2387		0.35		2387
	1.41		1982		0.70		2387
	1.76		1493		1.41		2387
	2.11		639		2.11		2387
3.16	0.00	389	2387		2.81		2387
	0.35		2387		3.52		2353
	0.70		2387		4.22		2247
	1.05		2387		4.92		1561
	1.41		2296		5.62		457
	1.76		1921	**8.44**	0.00	598	2387
	2.11		1292		0.35		2387
	2.46		564		0.70		2387
3.52	0.00	410	2387		1.41		2387
	0.35		2387		2.11		2387
	0.70		2387		2.81		2387
	1.05		2387		3.52		2387
	1.41		2387		4.22		2317
	1.76		2225		4.92		2253
	2.11		1714		5.62		1980
	2.46		1135		6.33		1171
	2.81		436		7.03		

Copyright Mazzei Injector Company, LLC June 2010
500 Rooster Dr Bakersfield CA USA 661-363-6500 FAX 661-363-7500

Mazzei Injector Company, LLC - Injector Performance Table

Injector Model 2081

10/1/2010

Operating Pressure PSIG		Air Suction		Operating Pressure PSIG		Air Suction	
Injector Inlet	Injector Outlet	Motive Flow GPM	Air Suction SCFH	Injector Inlet	Injector Outlet	Motive Flow GPM	Air Suction SCFH
5	0	33		60	0	114	1046
	1				5		865
	2				10		667
	3				15		422
	4				20		301
10	0	46	422		30		152
	2		230		35		139
	5		61		40		127
	7		48		45		105
	8		33	70	0	123	1129
15	0	57	523		5		955
	5		150		10		790
	7		80		15		568
	10		63		20		405
	12		41		30		198
20	0	66	606		40		152
	5		244		45		141
	10		88		50		125
	12		79		55		96
	15		61	80	0	131	1202
25	0	73	670		5		1031
	5		365		10		894
	10		137		15		697
	15		88		20		485
	20		52		30		281
30	0	80	734		40		175
	5		468		50		153
	10		211		60		120
	15		107		65		85
	20		89	90	0	139	
	25		43		5		
35	0	87	798		10		
	5		559		20		
	10		287		30		
	15		140		40		
	20		107		50		
	25		89		60		
40	0	93	853		70		
	5		634		75		
	10		344	100	0	147	
	15		199		5		
	20		124		10		
	25		109		20		
	30		85		30		
45	0	98	899		40		
	5		696		50		
	10		433		60		
	15		259		70		
	20		144		80		
	25		123				
	30		109				
	35		80				
50	0	104	954				
	5		761				
	10		519				
	15		321				
	20		195				
	25		139				
	30		125				
	35		109				
	40		74				

Copyright Mazzei Injector Company, LLC June 2010
500 Rooster Dr., Bakersfield, CA USA TEL 661-363-6500 FAX 661-363-7500

Mazzei Injector Company, LLC - Injector Performance Table

Injector Model **2081** 10/1/2010

Operating Pressure Kg/cm2		Air Suction		Operating Pressure Kg/cm2		Air Suction	
Injector Inlet	Injector Outlet	Motive Flow l/min	Air Suction l/min	Injector Inlet	Injector Outlet	Motive Flow l/min	Air Suction l/min
0.35	0.00	125		4.22	0.00	431	494
	0.07				0.35		408
	0.14				0.70		315
	0.21				1.05		199
	0.28				1.41		142
0.7	0.00	174	199		2.11		72
	0.14		108		2.46		66
	0.35		29		2.81		60
	0.49		23		3.16		49
	0.56		16	4.92	0.00	466	533
1.05	0.00	216	247		0.35		451
	0.35		71		0.70		373
	0.49		38		1.05		268
	0.70		30		1.41		191
	0.84		19		2.11		93
1.41	0.00	250	286		2.81		72
	0.35		115		3.16		67
	0.70		42		3.52		59
	0.84		37		3.87		45
	1.05		29	5.62	0.00	496	567
1.76	0.00	276	316		0.35		487
	0.35		172		0.70		422
	0.70		65		1.05		329
	1.05		41		1.41		229
	1.41		25		2.11		132
2.11	0.00	303	346		2.81		83
	0.35		221		3.52		72
	0.70		100		4.22		57
	1.05		50		4.57		40
	1.41		42	6.33	0.00	526	
	1.76		20		0.35		
2.46	0.00	329	377		0.70		
	0.35		264		1.41		
	0.70		135		2.11		
	1.05		66		2.81		
	1.41		51		3.52		
	1.76		42		4.22		
2.81	0.00	352	403		4.92		
	0.35		299		5.27		
	0.70		162	7.03	0.00	556	
	1.05		94		0.35		
	1.41		59		0.70		
	1.76		51		1.41		
	2.11		40		2.11		
3.16	0.00	371	424		2.81		
	0.35		329		3.52		
	0.70		204		4.22		
	1.05		122		4.92		
	1.41		68		5.62		
	1.76		58				
	2.11		51				
	2.46		38				
3.52	0.00	394	450				
	0.35		359				
	0.70		245				
	1.05		152				
	1.41		92				
	1.76		66				
	2.11		59				
	2.46		52				
	2.81		35				

Copyright Mazzei Injector Comnpany, LLC June 2010
500 Rooster Dr., Bakersfield, CA USA **TEL** 661-363-6500 **FAX** 661-363-7500

Series IF

Industrial Direct Reading Flowmeter

Air/Water Direct Reading Scale, 304 SS Protective Shield, ±3% Accuracy

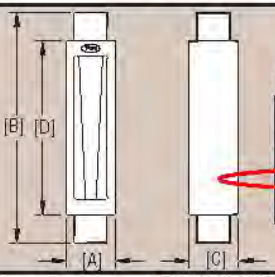

Dimensions

Tube Size	Female NPT	A	B	C	D
1 and 2	1/2"	2 [50.8]	9.54 [242]	2.25 [57.2]	8.04 [204]
3 and 4	1"	3.5 [89]	13.69 [348]	3.75 [95.3]	10.50 [267]
5 and 6	2"	5 [127]	15.59 [396]	5.25 [133]	11.55 [293]

Ideal for industrial applications, the Series IF Industrial Direct Reading Flowmeters are fully enclosed in a brushed stainless steel case. The flowmeters can directly measure flow rates up to 116 GPM (439 lpm) for water and 250 SCFM (7080 lpm) for air service. The detachable, clear 3/16" thick polycarbonate front shield provides protection at maximum rated temperature and pressure. Each unit is designed with female NPT end fittings for easy in-line installation.

SPECIFICATIONS

Service: Liquids or gases.
Wetted Materials:
Flowtube: Borosilicate glass; float, guide rods, float stops, end;
Fittings: 316 SS;
O-Rings: Fluoroelastomer.
Temperature Limit: 200°F (93°C).
Pressure Limit: 200 psi (13.8 bar); 125 psi for tube size 5 & 6.
Accuracy: ±3% of full scale.
Repeatability: ±0.5% of full scale.
Turndown Ratio: 10:1.
Scale: Dual scale GPM and SCFM.
Process Connection: See table.
Mounting: Vertical.
Front Shield: Polycarbonate.
Side Panels: 304 SS.

Model	Maximum Flow Rate Water GPM (LPM)	Maximum Flow Rate Air SCFM (LPM)	Tube Size	Pressure Drop (in H_2O)
IF2700	0.25 (0.95)	1.2 (35)	1	–
IF2701	0.36 (1.3)	1.7 (50)	1	2
IF2702	0.76 (3.0)	3.3 (90)	1	5
IF2703	1 (3.7)	4.2 (120)	2	6
IF2704	1.5 (5.6)	6.5 (180)	2	–
IF2705	2.2 (8.2)	8.5 (250)	2	10
IF2706	3.8 (14)	16 (475)	3	10
IF2707	5 (18)	21.5 (650)	3	14
IF2708	6 (20)	25.5 (725)	4	5
IF2709	7.4 (27.5)	30 (900)	4	6
IF2710	9.6 (35)	40 (1200)	4	10

Model	Maximum Flow Rate Water GPM (LPM)	Maximum Flow Rate Air SCFM (LPM)	Tube Size	Pressure Drop (in H_2O)
IF2711	11 (40)	47.5 (1400)	4	13
IF2712	14 (50)	62 (1800)	4	24
IF2713	20 (75)	90 (2600)	4	39
IF2714	22 (83)	90 (2550)	5	16
IF2715	26 (98)	–	4	70
IF2716	41 (155)	160 (4531)	6	5
IF2717	44 (167)	180 (5098)	5	30
IF2718	60 (227)	245 (6938)	6	16
IF2719	61 (231)	250 (7080)	5	40
IF2720	86 (326)	–	6	25
IF2721	116 (439)	–	6	45

Product Level Control

Product Level Control manufactures our own line of treatment sensors, custom-equipped for optimal on-site performance. By offering flexible product designs with a wide range of available options, we meet your individual project goals for the best possible value.

FEATURES

- Constructed to meet client specifications
- Easily changed between Normally Open (NO) and Normally Closed (NC) — simply remove the E-clip and invert the float
- Various materials of construction allow for chemical resistance to contaminants
- Delivered fully assembled
- 1-year warranty

ELECTRICAL SPECIFICATIONS

- *Maximum contact ratings:*
  0.080 Amp, 120V, 60 Hz Resistive
  0.040 Amp, 240V, 60 Hz Resistive
  3.36 VA, 240V, 60 Hz Pilot Study
  1 Amp Max @ 24 VDC Resistive
- *Single pole, single throw switch (SPST)*
- *18/2 stranded copper conductors*

MECHANICAL SPECIFICATIONS

- *Maximum pressure rating of 100 PSI @ 20°C*
- *Maximum temperature rating of 100°C*
- *Minimum specific gravity rating of 0.8*
- *Operable at angles up to 30° from vertical*
- *Length equals 6.5"*
- *Diameter equals 0.5"*

PROCESS OF OPERATION

Operating as a vertically-orientated level switch, a single float unit is used with a total fluid system to detect the presence of liquid in a recovery well or tank. When liquid is present, the float rises. Simply secure the sensor in a well or tank by restraining the power cord.

PLC PERSONALIZED ORDERING NUMBER

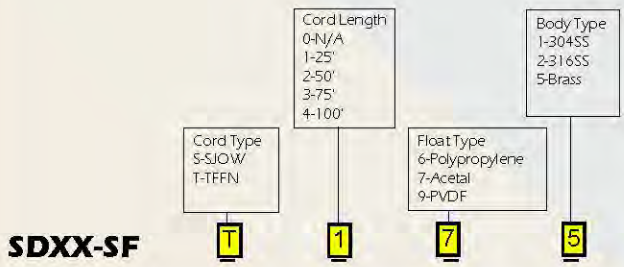

Badger M-Series Mag Meter	Model M-2000 Detector	Technical Brief

GENERAL

The Badger® M-Series® mag meter model M-2000 detector is the result of years of research and field use in electromagnetic flow meters. Based on Faraday's law of induction, these meters can measure almost any liquid, slurry or paste that has minimum electrical conductivity.

Designed, developed and manufactured under strict quality standards, the M-Series meter features sophisticated, processor-based signal conversion with accuracies of ±0.25 percent. The wide selection of liner and electrode materials helps ensure maximum compatibility and minimum maintenance over a long operating period.

OPERATION

The flow meter is a stainless steel tube lined with a nonconductive material. Outside the tube, two DC powered electromagnetic coils are positioned diametrically opposing each other. Perpendicular to these coils, two electrodes are inserted into the flow tube. Energized coils create a magnetic field across the whole diameter of the pipe.

As a conductive fluid flows through the magnetic field, a voltage is induced across the electrodes. This voltage is proportional to the average flow velocity of the fluid and is measured by the two electrodes. This induced voltage is then amplified and processed digitally by the converter to produce an accurate analog or digital signal. The signal can then be used to indicate flow rate and totalization or to communicate to remote sensors and controllers.

This technology provides many advantages. With no parts in the flow stream, there is no pressure loss. Also, accuracy is not affected by temperature, pressure, viscosity, density or flow profile. Finally, with no moving parts, there is practically no maintenance required.

APPLICATION

Because of its inherent advantages over other more conventional technologies, this meter can be used in the majority of industrial flow applications. Whether the fluid is water or highly corrosive, very viscous, contains a moderate amount of solids or requires special handling, this meter can accurately measure fluid flow. Today, magnetic meters are successfully used in industries including food and beverage, pharmaceutical, water and wastewater, and chemical.

FEATURES

M-2000 Detector

- ±0.25 percent accuracy independent of fluid viscosity, density and temperature
- Unaffected by most solids contained in fluids
- Pulsed DC magnetic field for zero point stability
- No pressure loss for low operational costs
- Corrosion resistant liners for long life
- Calibrated in state-of-the art facilities
- Integral and remote signal converter availability
- Optional grounding rings or grounding electrode
- Measurement largely independent of flow profile
- NSF listed

ELECTRODES

When looking from the end of the meter into the inside bore, the two measuring electrodes are positioned at three o'clock and nine o'clock. M-2000 mag meters have an "empty pipe detection" feature. This is accomplished with a third electrode positioned in the meter between twelve o'clock and one o'clock. If this electrode is not covered by fluid for a minimum five-second duration, the meter will display an "empty pipe detection" condition, send out an error message if desired, and stop measuring to maintain accuracy. When the electrode again becomes covered with fluid, the error message will disappear and the meter will continue measuring.

As an option to using grounding rings, a grounding electrode (fourth electrode) can be built into the meter during manufacturing to assure proper grounding. The position of this electrode is at five o'clock.

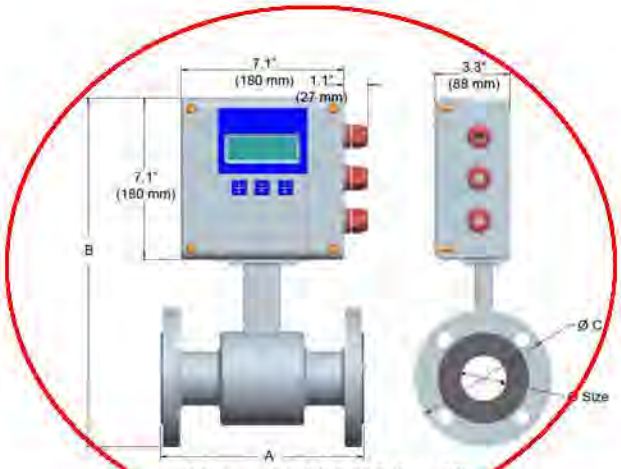

Meter with M-2000 Amplifier

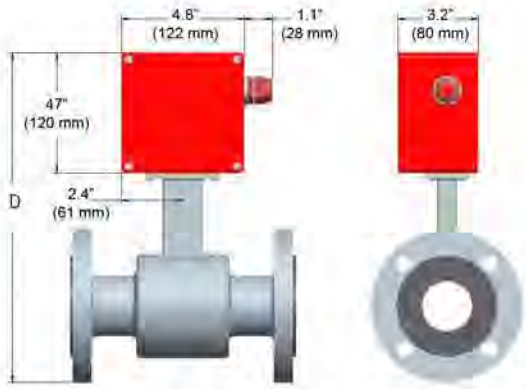

Meter with junction box for remote M-2000 Amplifier

Size		A		B		C		D		Est. Weight with M-2000		Flow Range LPM		Flow Range GPM	
inch	mm	inch	mm	inch	mm	inch	mm	inch	mm	Lbs	Kg	Min	Max	Min	Max
1/4	6	6.7	170	14.0	356	3.5	89	11.4	288	10	4.5	0.063	20	0.02	5
5/16	8	6.7	170	14.0	356	3.5	89	11.4	288	10	4.5	0.114	34	0.03	9
3/8	10	6.7	170	14.0	356	3.5	89	11.4	288	10	4.5	0.177	53	0.05	14
1/2	15	6.7	170	14.0	356	3.5	89	11.4	288	10	4.5	0.416	125	0.11	33
3/4	20	6.7	170	14.2	361	3.9	99	11.5	293	13	5.5	0.75	225	0.2	59
1	25	8.9	225	14.4	366	4.3	108	11.7	298	18	8.0	1.20	350	0.3	93
1 1/4	32	8.9	225	15.2	386	4.6	117	12.5	318	20	9.0	2.00	575	0.5	152
1 1/2	40	8.9	225	15.4	390	5.0	127	12.7	322	21	9.5	3.00	900	0.8	239
2	50	8.9	225	15.9	403	6.0	152	13.2	335	26	11.5	4.70	1400	1	373
2 1/2	65	11.0	280	17.1	434	7.0	178	14.4	366	52	23.5	8	2400	2	631
3	80	11.0	280	17.3	440	7.5	191	14.7	372	54	24.5	12	3600	3	956
4	100	11.0	280	18.4	466	9.0	229	15.7	398	56	25.5	19	5600	5	1493
5	125	15.8	400	19.6	498	10.0	254	16.9	430	58	26.0	30	8800	8	2334
6	150	15.8	400	20.6	524	11.0	279	17.9	456	60	27.0	40	12700	11	3361
8	200	15.8	400	22.5	572	13.5	343	20.4	518	86	39.0	75	22600	20	5975
10	250	19.7	500	26.8	681	16.0	406	24.1	613	178	81.0	120	35300	30	9336
12	300	19.7	500	28.9	734	19.0	483	26.2	666	207	94.0	170	50800	45	13444
14	350	19.7	500	30.8	782	21.0	533	28.2	716	258	117	230	69200	60	18299
16	400	23.6	590	33.7	856	23.5	597	31.0	788	306	139	300	90400	80	23901
18	450	23.6	590	35.0	890	25.0	635	32.4	822	400	181	380	114000	100	30250
20	500	23.6	590	38.2	969	27.5	699	35.5	901	493	224	470	140000	125	37346
22	550	23.6	590	39.6	1005	29.5	749	36.9	937	523	237	570	170000	150	45188
24	600	23.6	590	42.2	1071	32.0	813	39.5	1003	552	251	680	200000	180	53778
28	700	23.6	590	46.2	1173	36.5	927	44.0	1118	648	294	920	275000	240	73100
30	750	31.5	800	48.3	1228	39.0	984	45.7	1161	702	319	1060	315000	280	84000
32	800	31.5	800	52.2	1325	41.4	1015	49.5	1257	768	349	1200	361000	320	95600
36	900	31.5	800	55.3	1405	46.0	1168	54.1	1374	848	385	1500	457000	400	121000
40	1000	31.5	800	60.0	1525	50.2	1230	57.4	1457	922	419	1900	565000	500	149300
42	1050	36.0	914	66.0	1675	53.0	1346	63.4	1610	1198	499	2100	620000	550	164600
48	1200	39.4	1000	69.9	1775	59.4	1455	67.2	1707	1208	549	2700	814000	720	215100
54	1400	39.4	1000	78.5	1995	68.4	1675	75.9	1927	1362	619	3700	1100000	980	292700

SPECIFICATIONS - Detector

Flow Range: 0.1 - 39.4 fps (0.03-12 m/s)
Sizes: 1/4 inch to 54 inches (6 mm to 1400 mm)
Min. Conductivity: ≥ 5 micromhos/cm
Accuracy:
± 0.25 percent of rate for velocities greater than 1.64 ft/s (0.50 m/s)
± 0.004 ft/s (± 0.001 m/s) for velocities less than 1.64 ft/s (0.50 m/s)
Electrode Materials: Standard: Alloy C
Optional: 316 stainless steel, gold/platinum plated, tantalum, platinum/rhodium
Liner Material: PFA up to 3/8 inch, PTFE 1/2 inch to 24 inches, Soft and Hard Rubber from 1 to 54 inches, Halar® from 14 to 40 inches
NSF Listed: Models with hard rubber liner 4-inch size and up; PTFE liner - All sizes.

Fluid Temperature:
With Remote Amplifier:
PFA, PTFE & Halar 311°F (155°C)
Rubber 178°F, (80°C)
With Meter Mounted Amplifier:
PFA, PTFE & Halar 212°F (100°C)
Rubber 178°F, (80°C)
Pressure Limits:
Maximum allowable non-shock pressure and temperature ratings for steel pipe flanges, according to American National Standard ANSI B16.5. (Example: 150-pound flanges, rated 285 PSI at ambient temperature.) (Example: 300-pound flange rated 740 PSI at ambient temperature.
Coil Power: Pulsed DC
Ambient Temperature: -4°F to 140°F (-20°C to 60°C)

Pipe Spool Material: 316 stainless steel
Meter Housing Material: Carbon steel welded
Flanges: Carbon steel - Standard (ANSI B16.5 Class 150 RF) 316 stainless steel - Optional
Meter Enclosure Classification: NEMA 4X (IP66)
Optional: Submersible NEMA 6P (remote amplifier required)
Junction Box Enclosure Protection:
(for remote amplifier option) Powder coated die-cast aluminum, NEMA 4 (IP65)
Cable Entries: 1/2-inch NPT Cord Grip
Optional Stainless Steel Grounding Rings:

Meter Size	Thickness (of one ring)
up through 10 inches	.135 inch
12 to 20 inches	.187 inch

Badger and M-Series are registered trademarks of Badger Meter, Inc.

Only products bearing the NSF Mark are Certified.

Please see our Web site at
www.badgermeter.com
for specific contacts.

© 2010 Badger Meter, Inc. All rights reserved.

Due to continuous research, product improvements and enhancements, Badger Meter reserves the right to change product or system specifications without notice, except to the extent an outstanding contractual obligation exists.

BadgerMeter, Inc.
P.O. Box 245036
Milwaukee, WI 53224-9536
800-876-3837
infocentral@badgermeter.com • www.badgermeter.com

Badger M-Series Mag Meter	Model M-2000 Amplifier	Technical Brief

GENERAL

The innovative design of the Badger® M-Series® mag meter model M-2000 amplifier represents the next generation of electromagnetic (mag) flow meter signal processing. Incorporating the latest developments in microprocessor signal conditioning, the advanced design of the M-2000 meter allows for an accuracy of ±0.25 percent with a flow range of 300:1. The M-2000 amplifier can be integrally mounted to the detector or can be mounted remotely, if necessary. Housed in a NEMA 4X (IP66) enclosure, the amplifier targets a variety of applications and is well suited for the diverse water and wastewater treatment industry.

OPERATION

The M-2000 amplifier receives the detector's analog signal, amplifies that signal and converts it into digital information. At the processor level, the signal is analyzed through a series of sophisticated software algorithms. After separating the signal from electrical noise, it is converted into both analog and digital signals that are used to display rate of flow and totalization. In addition, the processor controls zero-flow stability, analog and frequency outputs, serial communications and a variety of other parameters. The large four-line, 20-character LCD display indicates rate of flow, forward and reverse totalizers and diagnostic messages. The display also serves to guide the user in simple terms through the user-friendly programmable routines.

Programmable parameters of the amplifier include, but are not limited to: calibration factors, totalizer resets, unit of measure, analog and pulse output scaling, flow-alarm functions, language selection, low-flow cutoff, noise dampening factor and excitation frequency selection.

APPLICATION

The M-2000 amplifier's main function is to detect and condition flow information from the electromagnetic detector. The unit is ideally suited for measuring dynamic, non-continuous flow. In applications where a minimum and/or maximum flow rate must be tracked and monitored, the unit provides pulse signals that can be fed to dedicated batch controllers, PLCs and other more specialized instrumentation.

M-2000 Amplifier

FEATURES

- Digital signal processor (32 bit)
- Large, four-line by 20 character LCD display with backlight
- User-friendly programming procedure
- Digital and analog outputs
- NEMA 4X (IP66) enclosure
- Meter mount or remote wall mount
- Bidirectional flow sensing/totalization
- Better than ±0.1% repeatability
- Measures fluids with as low as 5.0 micromhos/cm conductivity
- Empty pipe detection
- Power loss totalization
- Modbus RTU via RS232
- Non-volatile programming memory
- Exterior buttons for easy menu navigation
- Rotating cover
- Enhanced security options

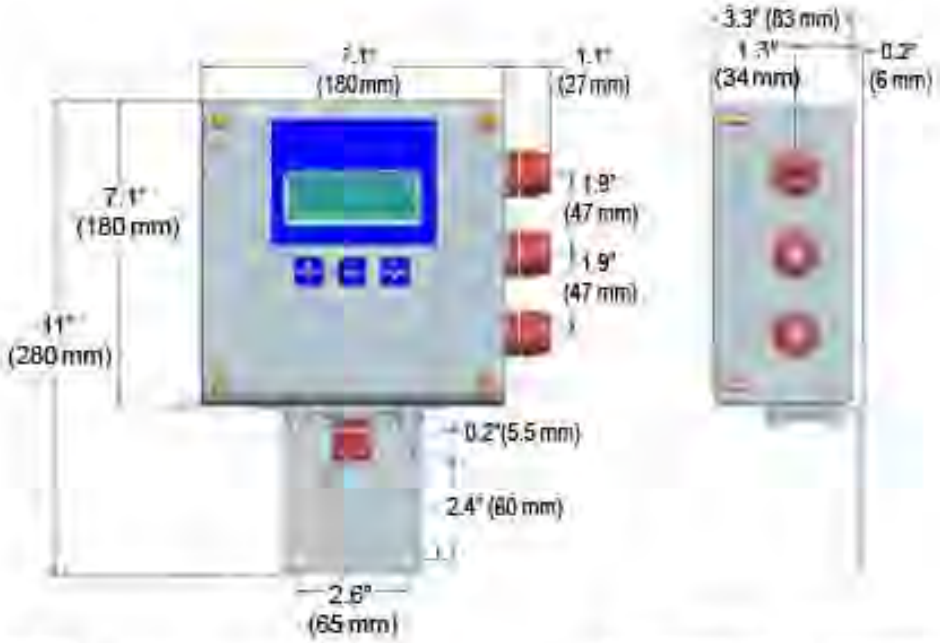

SPECIFICATIONS

Power Supply: AC, 85-265 VAC (45-65 Hz)
Power Consumption: 15 Watts
Accuracy: ± 0.25 percent of rate for velocities greater than 1.64 ft/s (0.50 m/s)
± 0.004 ft/s (± 0.001 m/s) for velocities less than 1.64 ft/s (0.50 m/s)
Repeatability: ± 0.1 percent
Flow Range: 0.10 to 39.4 ft/s (0.03 to 12 m/s)
Fluid Conductivity: Minimum 5.0 micromhos/cm
Flow Direction: Unidirectional or bidirectional (programmable)
Totalization: Programmable/resettable
Unidirectional: T1, T2
Bidirectional: T+ (Fwd), T- (Rev), Tn (Net)
Minimum Fluid Conductivity: 5.0 micromhos/cm
Processing: 32-bit DSP
Flow Direction: Unidirectional or bidirectional, two separate totalizers (programmable)
Analog Output: 4-20 mA, 0-20 mA, 0-10 mA, 2-10 mA (programmable and scalable)
Voltage sourced 24 VDC – isolated
Maximum loop resistance = 800 ohms
Digital Outputs: Four total, configurable
24VDC sourcing active output (up to two), 100 mA total, 50 mA each; sinking open collector output (up to four), 30 VDC Max, 100 mA each; AC solid-state relay (up to two), 48 VAC, 500 mA max.
Pulse Outputs: Scalable up to 10 kHz, passive open collector up to 10 kHz, active switched 24 VDC. Up to two outputs (forward and reverse). Pulse width programmable from 1-1,000 ms or 50 percent duty cycle.
Frequency Output: Scalable up to 10 kHz, open collector up to 1 kHz, solid-state relay.
Misc Outputs: High/low flow alarm (0-100 percent of flow), error alarm, empty pipe alarm, flow direction, preset batch alarm, 24 VDC supply.
Noise Dampening: Programmable 0-30 seconds
Empty Pipe Detection: Field tunable for optimum performance based on specific application
Excitation Frequency: 1 Hz, 3.75 Hz, 7.5 Hz or 15 Hz (factory optimized to pipe diameter).
Digital Input: Max. 30 VDC (programmable – positive zero return, external totalizer reset or preset batch start)
Units of Measure: Ounces, pounds, liters, US gallon, imperial gallon, barrel, hectoliter, megagallon, cubic meters, cubic feet, acre feet
Galvanic Separation: 250 volts
Low-flow-cutoff: Programmable 0-10 percent of max. flow
LCD Display: 4 x 20 character display with backlight
Programming: Three-button, external manual or remotely
Housing: Cast aluminum, powder-coated paint
Housing Rating: NEMA 4X (IP66)
Mounting: Meter mount or remote wall mount (bracket supplied)
Cable Connection: 1/2-inch NPT Cord Grip (three)
Ambient Temperature: -4 to 140° F (-20 to 60° C)
Serial Communication: RS232 – Modbus RTU or remote display
Logging: Power loss totalization
Relative Humidity: Up to 90 percent non-condensing
Locations: Indoor and outdoor
Altitude: Maximum 6,500 feet (2000 m)

Badger and M-Series are registered trademarks of Badger Meter, Inc.

Please see our Web site at

www.badgermeter.com

for specific contacts.

© 2010 Badger Meter, Inc. All rights reserved

Due to continuous research, product improvements and enhancements Badger Meter reserves the right to change product or system specifications without notice, except to the extent an outstanding bid obligation exists.

BadgerMeter, Inc.
P.O. Box 245036
Milwaukee, WI 53224-9536
800-876-3837
infocentral@badgermeter.com • www.badgermeter.com

Submersible Liquid Level Transmitter
Model LS-10, LH-10

Applications

- Level measurement in water and wastewater treatment plants, wells, holding tanks, wet wells, rivers

Special Features

- Ranges from 50INWC to 400PSI
- Rated IP 68 for permanent submersion
- Hastelloy case available for aggressive media
- 4-20 mA 2-wire output signal, others available
- Lightning protection available
- Cable supports over 220 pounds of strain

Description

The LS-10 liquid level transmitter is designed for economical and reliable performance in a wide variety of level measurement applications. The LS-10 provides a signal output of 4-20mA and an accuracy of 0.25% of span. Standard stocked pressure ranges are assembled with any length cable for fast delivery.

The high performance Model LH-10 provides 0.125% accuracy and is available with many custom features for special requirements. LH-10 options include lightning protection, temperature measurement, special output signals, plus FEP cable and Hastelloy construction for aggressive media.

The LH-10 is available with a low power 0.5-2.5V output signal and 5VDC supply voltage. This is ideal for solar or battery powered installations.

The LH-10 includes a dual cable entry design that prevents ingress of moisture into the electronics even if the cable is damaged. Both models feature watertight vented cable that can withstand over 220 pounds of strain. This allows the transmitter to be supported without any additional cabling.

Compensation for atmospheric pressure changes is accomplished through a vent tube in the cable. Many accessories, including cable clamps, desiccant drying cartridges, additional weights, and junction boxes are available for specific installation requirements. Both models can be equipped with the LevelGuard ™ attachment for protection in difficult environments.

Left: LS-10 level transmitter
Center: LH-10 high performance level transmitter
Right: LH-10 with optional Hastelloy case and FEP cable

Optional WIKA LevelGuard™ Anti-clog attachment for submersible level transmitters. For use in lift stations, wet wells and other difficult level applications. For more information request bulletin LG-1.

WIKA
Part of your business

Specifications — Model LS-10 / LH-10

Pressure ranges											
LS-10 or LH-10 pressure ranges	100INWC	150INWC	250INWC	400INWC	5PSI	10PSI	15PSI	25PSI	30PSI	50PSI	100PSI
Maximum pressure*	30PSI	30PSI	60PSI	72PSI	30PSI	60PSI	72PSI	145PSI	145PSI	145PSI	145PSI
Burst pressure**	35PSI	35PSI	70PSI	87PSI	35PSI	70PSI	87PSI	174PSI	174PSI	174PSI	174PSI
LH-10 pressure ranges [1]	50INWC	160PSI	200PSI	250PSI	300PSI	400PSI					
Maximum pressure*	14PSI	500PS	500PS	500PS	500PS	500PS					
Burst pressure**	28PSI	600PSI	600PSI	600PSI	600PSI	600PSI					

[1] Maximum range for LH-10 with FEP cable is 100PSI

		Model LS-10	Model LH-10
Materials			
■ Body		Stainless steel	Stainless steel {Hastelloy}
■ Pressure connection and diaphragm		Stainless steel	Stainless steel {Hastelloy}
■ Protective cap		PA	PA {Stainless steel} {Hastelloy}
■ Cable		PUR (polyurethane)	PUR {FEP, to 100 PSI maximum}
Power supply U_B	DC V	$10 < U_B \leq 30$	$10 < U_B \leq 30$ (14 ... 30 with 0 ... 10 V output signal) (5 ... 30 for battery powered operation, output signal 0.5 ... 2.5 V) [2]
Output signal		4 ... 20 mA, 2-wire	4 ... 20 mA, 2-wire 0 ... 20 mA, 3-wire {0 ... 5 V, 3-wire} {0 ... 10 V, 3-wire} {0.5 ... 2.5 V, 3-wire for battery powered operation} [3] {Pt 100, 4-wire; IEC 60751} {Other signal outputs on request}
	[2] Power supply 5 ... 10 VDC with optional lightning protection [3] Available with pressure ranges ≥ 0 100INWC		
Pt 100 RTD temperature sensor			
■ I max	mA	Not available	3
■ I mess	mA	Not available	1
Maximum load R_A			
■ Current output signal		$R_A < (U_B - 10V) / 0.02A$ – (0.043 Ohm x cable length in feet) (R_A in Ohms and U_B in VDC)	
■ Voltage output signal		-	$R_A > 100$ kOhm
Response time (10 ... 90 %)	ms	≤ 1	≤ 1
Isolation voltage	DC V	500 [4]	500 [4]
	[4] NEC Class 02 power supply (low voltage and low current max. 100 VA even in fault conditions)		
Accuracy [5]	% of span	≤ 0.25 (BFSL)	≤ 0.125 [6] (BFSL)
	% of span	≤ 0.5 (limit point calibration)	≤ 0.25 [6] (limit point calibration)
	[5] Including linearity, hysteresis and repeatability. Limit point calibration method performed in vertical mounting position with pressure connection facing down. [6] For pressure ranges < 0 ... 100INWC accuracy ≤ 0.25% of span (BFSL) . ≤ 0.5% of span (limit point calibration)		
Repeatability	% of span	≤ 0.05	≤ 0.05
1-year stability	% of span	≤ 0.2 (at reference conditions)	≤ 0.2 (at reference conditions)
Permissible temperature of			
■ Medium [7]		+14 ... +122 °F | -10 ... +50 °C	+14 ... +122 °F | -10 ... +50 °C {+14 ... +185 °F (-10 ... +85 °C) with FEP-cable option}
■ Storage [7]		-22 ... +176 °F | -30 ... +80 °C	-22 ... +176 °F | -30 ... +80 °C
	[7] Also complies with EN 50178, Tab. 7, Type C, Class 4KH Operation, 1K4 Storage, 1K3 Transport		
Compensated temperature range		0 ... +50 °C | +32 ... +122 °F	0 ... +50 °C | +32 ... +122 °F
Temperature coefficients (TC) within compensated temperature range:			
■ Mean TC of zero	% of span	≤ 0.2 / 10 K (< 0.4 for 0.50 INWC)	
■ Mean TC of range	% of span	≤ 0.2 / 10 K	≤ 0.2 / 10 K

Specifications		Model LS-10 / LH-10
CE-conformity		89/336/EWG interference emission and immunity see EN 61 326 Interference emission limit class A and B
Wiring protection		Protected against reverse polarity, overvoltage and short circuiting on the instrument side {Lightning protection EN 61000-4-5; 1,2J}
Weight		
■ Level Transmitter	lb	Approx. 0.4
■ Cable	lb	Approx. 0.18
■ Additional weight	lb	Approx. 1.1

Items in curved brackets { } are optional extras for additional price.

Dimensions in inches (mm)

Ingress Protection NEMA 6P (IP 68 per IEC 60 529)

LS -10 (Immersion depth up to 325 ft /100 m)

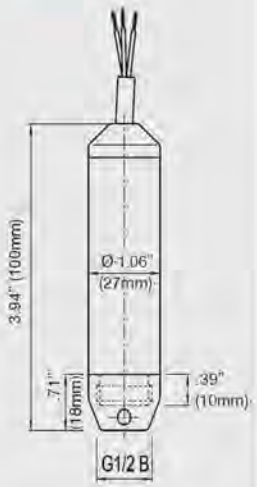

LH-10 with PUR-cable (Immersion depth up to 1000 ft / 300 m)

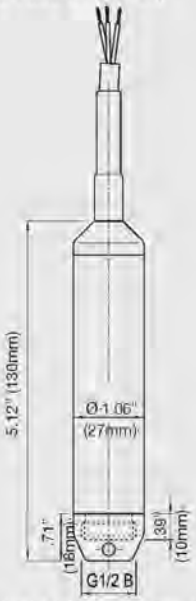

LH-10 with FEP-cable *) (Immersion depth up to 325 ft / 100 m)

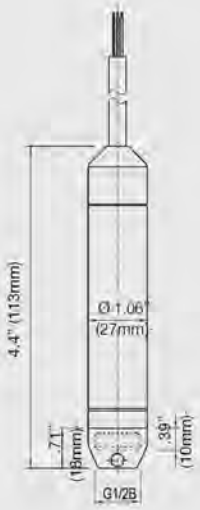

LH-10 with FEP-cable *) (Immersion depth up to 325 ft / 100 m) {Hastelloy}

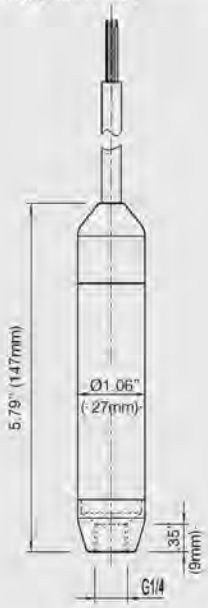

No additional support is required for installation as the cable can withstand over 220 lbs of strain (110 lbs for FEP cable)

*) FEP-cable and lightning protection EN 61000-4-5; 1,2J on request

100 mm = 3.937 inches

Wiring

Vented PUR-cable tensile strength 220 Lbs (110 LBS with FEP-cable)

2-wire

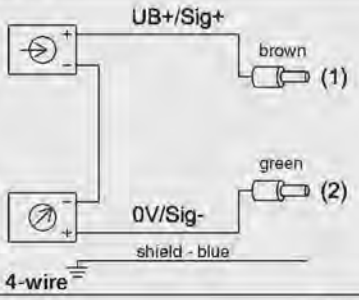

3-wire

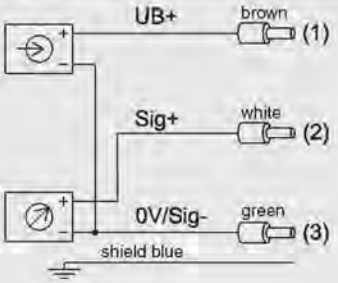

Pt 100 RTD temperature sensor

4-wire

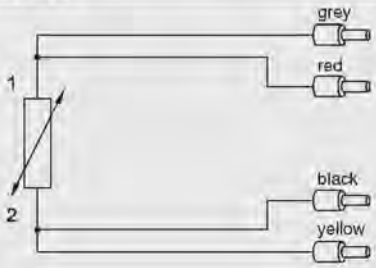

Legend:

power supply	Sig+	output signal positive
	UB+	power supply positive
load (e.g. display)	0V	power supply negative
	Sig -	output signal negative

Accessories
Dimensions in inches (mm)

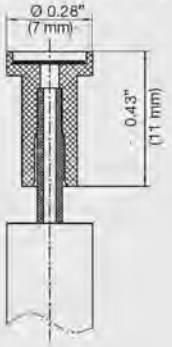

Vent tube filter Part# 7193131
The optional Teflon vent tube filter protects the vent opening and protects against the entry of dirt and moisture.

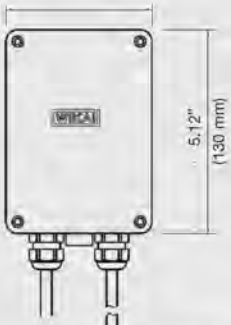

Cable junction box Part#459686
The cable junction box is rated NEMA 4 / IP 67 and is suitable for mounting outside tanks or shafts or inside dry control boxes. Can be wall or DIN rail mounted.

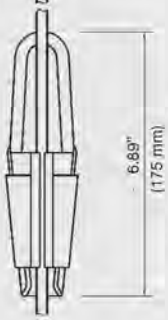

Cable clamp Part# 2074257
The cable clamp secures the cable without bending or kinking that can damage the cable vent tube or outer jacket.

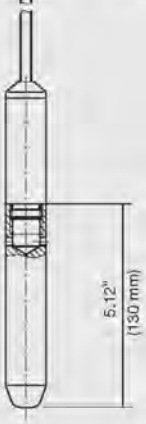

Additional weight Part# 1524399
The additional weight replaces the protective cap and helps to stabilize the transmitter in turbulent conditions. Weight: approximately 1.1 lb, 316ss.

Desiccant drying cartridge part # 9836700
The desiccant drying cartridge helps prevent moisture buildup inside the vent tube.

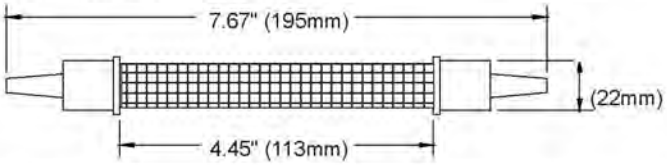

NPT adapter Part# 1631322
The 316 ss G1/2 adapter replaces the removable protective cap and converts the threads to 1/2"NPT male external, 1/4" female internal threads. Includes O-ring.

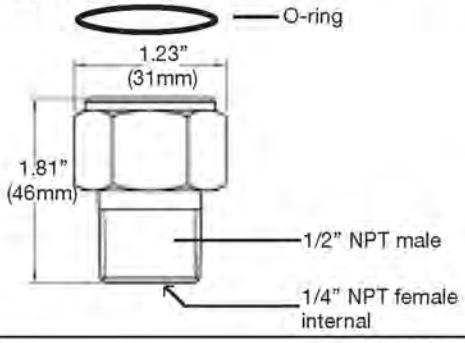

Conduit adapter Part# 2289718
316 ss 1/2" NPT male cable conduit adapter.
Must be factory installed.

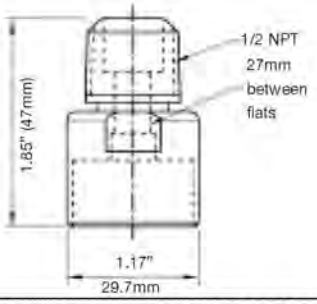

LevelGuard™ Anti-clog attachment Part # 50077091

The stainless steel LevelGuard™ attachment must be factory installed and calibrated.

Specifications and dimensions given in this data sheet represent the state of engineering at the time of printing.
Modifications may take place and materials specified may be replaced by others without prior notice.

WIKA Instrument Corporation
1000 Wiegand Boulevard
Lawrenceville, GA 30043
1-888-WIKA-USA /770-513-8200 (in GA)
Fax 770-338-5118
info@wika.com www.wika.com

DAUGHTRIDGE SALES CO., INC.

501 S PINE STREET • PO BOX 4364 • ROCKY MOUNT NC 27803
TOLL FREE: 800-334-9720 • 252-977-1131 • FAX: 252-977-2192
www.dascosales.com • info@dascosales.com

PRESSURE & TEMPERATURE INSTRUMENTATION
DASCO

981 SERIES GAUGE
250BL, 250SD & 250SL
Specifications

Sizes: 2½" - 250BL, 250SD & 250SL
Case: Stainless Steel
Ring: 250BL - Crimped Stainless Steel
250SD & 250SL - Stainless Steel Bayonet
Window: Acrylic
Dial: White with black & blue scales
Pointer: Black aluminum
Connection: 1/4" NPT Back & Lower*
Tube & Socket: 250BL -Brass/Bronze
250SD & 250SL - SS
Movement: 250BL - Brass
250SD & 250SL - SS
Ranges: See Range Availability Chart Below
All Ranges are dual scale PSI & Bar/Kpa
Accuracy: ASME B40.1, Grade B. ± 3-2-3%
Liquid Fill: Glycerine (BL & SL Models are liquid filled; SD is field fillable)
Options: Front Flange or U-Clamp for panel mounting

	Vac	Vac/15	Vac/30	Vac/60	Vac/100	Vac/160	Vac/300	0/15	0/30	0/60	0/100	0/160	0/200	0/300	0/400	0/600	0/1000	0/1500	0/2000	0/3000	0/5000	0/8000	0/10,000
2½" 250BL 02L	X	X	X	X	X	X		X	X	X	X	X	X	X	X	X	X	X	X	X	X	X	X
2½" 250BL O2B	X	X	X	X	X	X		X	X	X	X	X	X	X	X	X	X	X	X	X	X	X	X
2½" 250SL 02L	X	X	X	X	X	X	X	X	X	X	X	X	X	X	X	X	X	X	X	X	X	X	X
2½" 250SL 02B	X	X	X	X	X	X	X	X	X	X	X	X	X	X	X	X	X	X	X	X	X	X	X
2½" 250SD 02L	X	X	X	X	X	X	X	X	X	X	X	X	X	X	X	X	X	X	X	X	X	X	X
2½" 250SD 02B	X	X	X	X	X	X	X	X	X	X	X	X	X	X	X	X	X	X	X	X	X	X	X

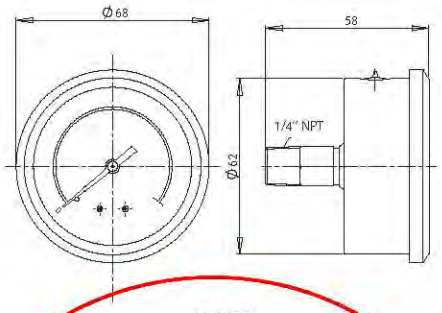

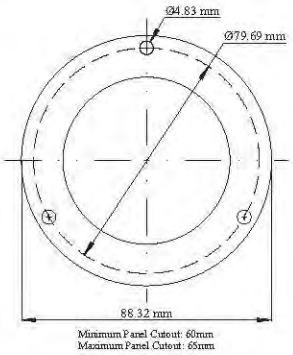

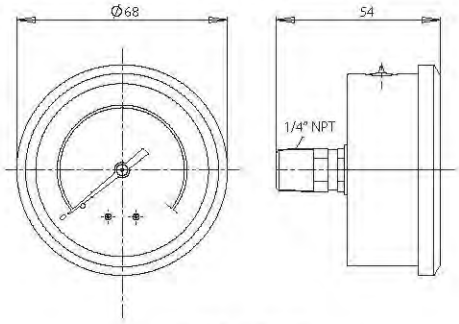

250BL

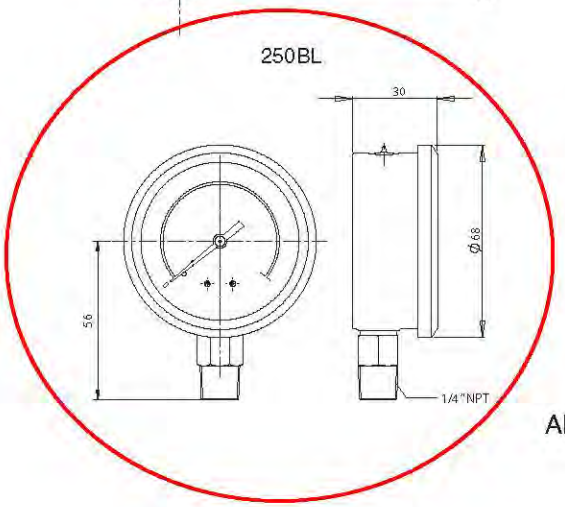

250SD & 250SL

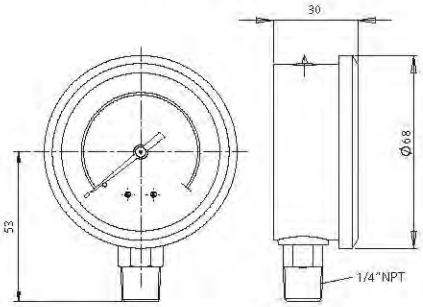

All Dimensions are shown in mm

Dialmatic
Housed Diaphragm Models
With Adjustment Dials
Water-tight Housing (NEMA 4)
Tamper-proof External Adjustment

OPERATING CHARACTERISTICS • ORDERING DATA

PRESSURE SWITCHES - All values given in P.S.I. (Gauge) except as noted "H_2O

Proof (Test) Pressure	Adjustable Range Decreasing Min.	Decreasing Max.	Increasing Min.	Increasing Max.	Approximate Actuation Value (Differential)	Wetted Material	Catalog Number CD1H	CD2H
83.30 H_2O	0.50	34.60	1.90	36.00	0.60 to 1.40	17-7PH	CD1H-H2SS	CD2H-H2SS
10.00	0.30	2.85	0.18	3.00	0.07 to 0.15	17-7PH	CD1H-A3SS	CD2H-A3SS
60.00	0.40	17.74	0.66	18.00	0.12 to 0.26	17-7PH	CD1H-H18SS	CD2H-H18SS
160.00	0.50	76.60	3.90	80.00	1.60 to 3.40	17-7PH	CD1H-A80SS	CD2H-A80SS
300.00	1.50	144.00	7.50	150.00	2.30 to 6.00	17-7PH	CD1H-A150SS	CD2H-A150SS
Approximate shipping weight: 1.75 lbs.								

PRESSURE:
CD1H SINGLE SETTING
CD2H DUAL CONTROL

VACUUM:
VCD1H SINGLE SETTING
VCD2H DUAL CONTROL

VACUUM SWITCHES - All values given in inches of mercury (Gauge)

Proof (Test) Vacuum	Proof (Test) Pressure	Adjustable Range Dec. Vacuum Min.	Dec. Vacuum Max.	Incr. Vacuum Min.	Incr. Vacuum Max.	Approximate Actuation Value (Differential)	Wetted Material	Catalog Number VCD1H	VCD2H
6.00 "Hg	10 PSI	0.06	5.72	0.34	6.00	0.14 to 0.28	17-7PH	VCD1H-A3SS	VCD2H-A3SS
30.00 "Hg	60 PSI	0.80	29.20	1.60	30.00	0.40 to 0.80	17-7PH	VCD1H-H18SS	VCD2H-H18SS
Approximate shipping weight: 1.75 lbs.									

17-7PH Stainless Steel

DETAIL DATA

ELECTRICAL CHARACTERISTICS: All models incorporate Underwriters' Laboratories, Inc. listed single pole double throw snap-action switching elements. Electrical rating (continuous inductive) 10 amps 125 or 250 volts AC, 3 amps 480 volts AC. Automatically reset by snap-action of switch. For more details and other switch classes, see pages 34-36.

ELECTRICAL CONNECTION:
Switches may be wired 'normally open' or 'normally closed' to free leads approximately 18" long.

PRESSURE (VACUUM) **CONNECTION:** ¼" npt internal thread. ½" npt available stainless steel only add – P2 to catalog number when ordering.

ADJUSTMENT:
Turn self locking adjustment screw counterclockwise to increase pressure setting or clockwise to increase vacuum settings.
All dials are calibrated for increasing settings.

OPTIONAL MODIFICATIONS: Stripped (no housing). To specify, change "H" to "S" in part number. Example: CD1S-H18. Consult factory for price and delivery.

WIRE CODING — PRESSURE
Circuit #1: Common — Purple
Normally Closed — Blue
Normally Open — Red
Circuit #2: Common — Brown
Normally Closed — Orange
Normally Open — Yellow

WIRE CODING — VACUUM
Circuit #1: Common — Purple
Normally Closed — Red
Normally Open — Blue
Circuit #2: Common — Brown
Normally Closed — Yellow
Normally Open — Orange

All models are Underwriters' Laboratories listed in the Electrical Construction Materials Directory under Industrial Control Equipment, Float and Pressure Operated (NKPZ), File E42816, and Canadian Standards Association listed under Guide 380-W-1.16, Class 3231, File 22355.

CD1H

CD2H

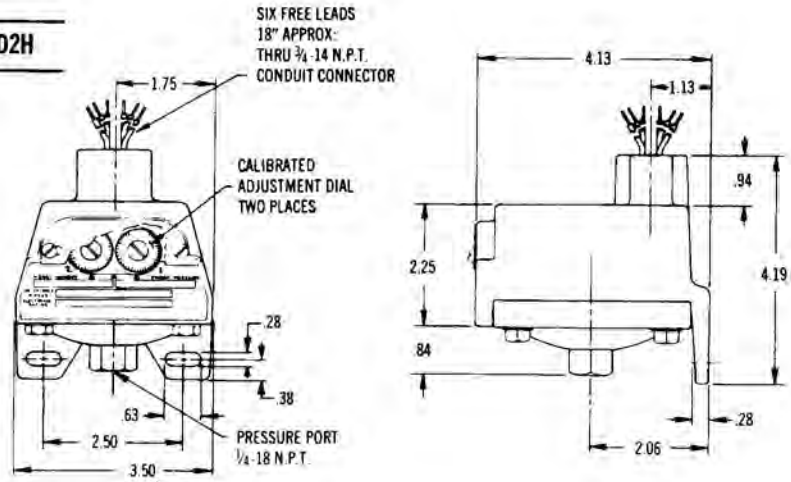

Fig. No. 210 Bronze Globe Valve – 100 lb.

Features

- Inserted Bonnet
- Swivel Type Metal Disc
- Screwed Ends

Working Pressures

Working Pressure Non-Shock (psi)		Test Pressure (psi)	
Saturated Steam	Cold Water, Oil, Gas	Shell (Water)	Seat (Air)
100	150	225	80

Materials & Specifications

Item	Description		Material	Specification
1	Body		Cast bronze	ASTM B62-C83600
2	Bonnet	3/8" & 1/2"	Forged brass	ASTM B124-C37700
		3/4" - 2 1/2"	Forged brass	ASTM B283-C37700
		3"	Cast bronze	ASTM B62-C83600
3	Stem		Brass alloy	DR alloy*
4	Disc	3/8" - 1 1/2"	Brass alloy	Dr alloy*
		2" - 3"	Cast bronze	ASTM B62-C83600
5	Lock nut	1 1/2" - 3"	Brass rod	ASTM B16-C36000
6	Packing nut	1 1/4" - 3"	Forged brass	ASTM B283-C37700
7	Gland		Forged brass	ASTM B124-C37700
8	Gland packing		Plastic graphite	T#2996-NA
9	Handwheel	3/8" & 3/4"	Zinc alloy die casting	ASTM B86-Z33520
		1" - 3"	Aluminum alloy die casting	ASTM B85-A03840
10	Wheel nut		Steel (Zinc plated)	ASTM A563 Gr. A
11	Name plate		Aluminum plate	ASTM B209-1100

* Dezincification resistant

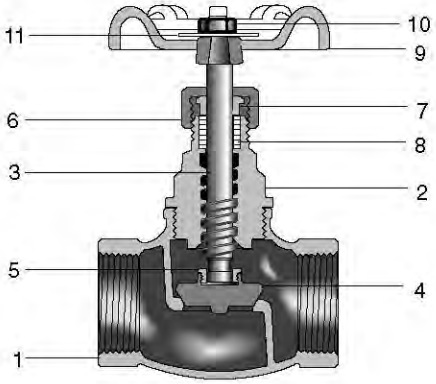

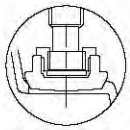

Disc construction for sizes 1 1/2" & larger

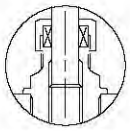

Stuffing box construction for sizes 1" & smaller

Dimensions & Weights (inches-lbs.)

Size	1/4	3/8	1/2	3/4	1	1-1/4	1-1/2	2	2-1/2	3	4
L	-	1.65	1.89	2.09	2.48	2.87	3.23	3.86	4.65	5.35	-
H	-	2.64	2.91	3.03	3.50	4.33	5.16	5.67	7.20	8.27	-
D	-	1.89	2.17	2.17	2.48	2.76	3.15	3.54	4.33	4.92	-
Wt.	-	0.51	0.57	0.73	1.23	1.94	2.49	3.83	6.58	9.42	-

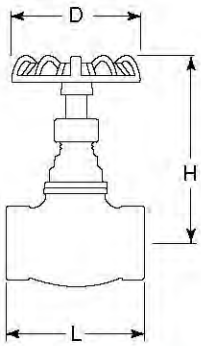

RED-WHITE
VALVE CORP.
20600 Regency Lane, Lake Forest, CA 92630 Tel: (949) 859-1010 Fax: (949) 859-7200 E-mail: info@rwvcusa.com www.redwhitevalveusa.com

Bourdon Tube Pressure Gauges
Industrial Stainless Steel Gauge
Type 232.54 - Dry Case
Type 233.54 - Liquid-filled Case

Applications

- Intended for adverse service conditions where pulsating or vibration exists
- Process industry: chemical/petrochemical, power stations, mining, on and offshore, environmental technology, mechanical engineering and plant construction
- Suitable for gaseous or liquid media that will not obstruct the pressure system

Special features

- Vibration and shock resistant (with liquid filling)
- All stainless steel construction
- Pressure ranges up to 15,000 psi

Bourdon Tube Pressure Gauge Model 232.54

Standard Features

Design
ASME B40.100 & EN 837-1

Sizes
2½" & 4" (63 & 100 mm)

Accuracy class
2½": ± 2/1/2% of span (ASME B40.100 Grade A)
4": ± 1% of span (ASME B40.100 Grade 1A)

Ranges
Vacuum / Compound to 200 psi
Pressure from 15 psi to 15,000 psi
or other equivalent units of pressure or vacuum

Working pressure

2½":	Steady:	3/4 scale value
	Fluctuating:	2/3 full scale value
	Short time:	full scale value
4":	Steady:	full scale value
	Fluctuating:	0.9 x full scale value
	Short time:	1.3 x full scale value

Operating temperature
Ambient: -40°F to +140°F (-40°C to +60°C) - dry
-4°F to +140°F (-20°C to +60°C) - glycerine filled
-40°F to +140°F (-40°C to +60°C) - silicone filled
Medium: +212°F (+100°C) maximum

Temperature error
Additional error when temperature changes from reference temperature of 68°F (20°C) ±0.4% for every 18°F (10°C) rising or falling. Percentage of span.

Weather protection
Weather tight (NEMA 4X / IP 65)

Pressure connection
Material: 316L stainless steel
Lower mount (LM) or center back mount (CBM) - 2½"
Lower mount (LM) or lower back mount (LBM) - 4"
1/4" NPT or 1/2" NPT limited to wrench flat area

Bourdon tube
Material: 316L stainless steel
2" & 2½": ≤ 1,000 PSI: C-type,
≥ 1,500 PSI: helical type
4": ≤ 1,500 PSI: C-type,
≥ 2,000 PSI: helical type

Movement
300-series stainless steel

Dial
White aluminum with black lettering; 2½" size with stop pin

WIKA
Part of your business

Pointer
Black aluminum, friction adjustable

Case
304 stainless steel with vent plug and polished stainless steel bayonet ring. Suitable for liquid filling. Welded case/ socket connection

Window
Laminated safety glass with Buna-N gasket

Case fill
Glycerine 99.7% - Type 233.54

Optional extras
- 316SS restrictor
- Accuracy ±1.0% of full scale (2½" size)
- Stainless steel front or rear flange
- Zinc-plated steel or SS u-clamp bracket (field installable)
- Red drag pointer or mark pointer
- Silicone or fluorolube case filling
- Special connections limited to wrench flat area
- Custom dial layout
- Other pressure scales available
  bar, kPa, MPa, kg/cm² and dual scales

Dimensions

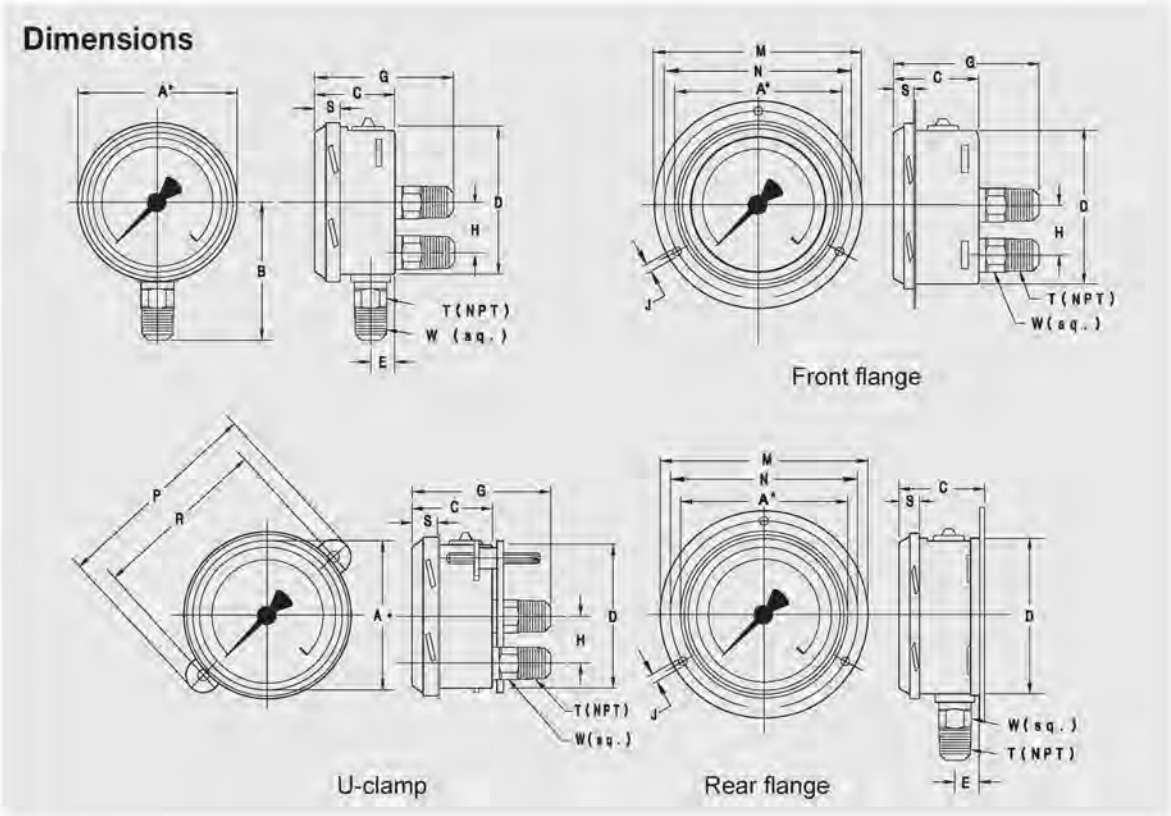

Size		A	B	C	D	E	G	H	J	M	N	P	R	S	T	W	Weight	
2.5"	mm	70	54	33.5	62	13	55.5	-	3.6	85	75	87	72	12		14	0.36 lb.	dry
	in	2.75	2.13	1.32	2.44	0.51	2.19	-	0.14	3.35	2.95	3.43	2.83	0.47	1/4"	0.55	0.44 lb.	filled
4"	mm	110	87	49.5	100	15.5	81	30	4.8	132	116	125	110	15		22	1.10 lb.	dry
	in	4.30	3.43	1.95	3.94	0.61	3.19	1.18	0.19	5.20	4.57	4.92	4.33	0.59	1/2"	0.87	1.76 lb.	filled

Recommended panel cutout is dimension D + 1 mm

Ordering information
Pressure gauge model / Nominal size / Scale range / Size of connection / Optional extras required
Specifications and dimensions given in this leaflet represent the state of engineering at the time of printing.
Modifications may take place and materials specified may be replaced by others without prior notice.

WIKA Instrument Corporation
1000 Wiegand Boulevard
Lawrenceville, GA 30045
Tel (770) 513-8200 Toll-free 1-888-WIKA-USA
Fax (770) 338-5118
E-Mail info@wika.com
www.wika.com

Cepex™

Ball valves
Robinets à boisseau sphérique
Válvulas de bola
Válvulas de esfera

- "Antiblock" system that avoids ball blockage
- 100% factory tested
- Electric & pneumatic actuators available

- Système "Antiblock" qui évite le colmatage du boisseau
- 100% des robinets testés en usine
- Motorisations électriques et pneumatiques disponibles

- Sistema "Antiblock" que evita el bloqueo de la bola
- Probadas al 100% en fábrica
- Motorizaciones eléctricas y neumáticas disponibles

- Sistema de "Antiblock" que evita o bloqueio da esfera
- Testadas a 100% na fábrica
- Disponíveis actuadores eléctricos e pneumáticos

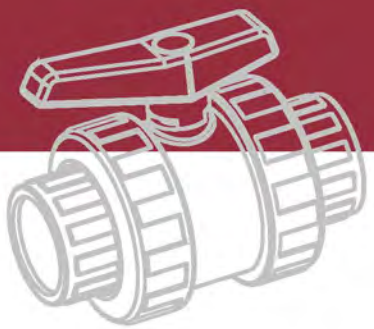

Industrial Series
Série Industrial
Serie Industrial
Série Industrial

ENG **Range**
- ½" - 4" (20 mm - 110 mm)

Standards
- Available Standards: ASTM, Metric, British Standard, JIS
- Threaded Version: NPT & BSP

Working pressure
- At 73°F: ½" - 2" (20 mm - 63 mm) 240 psi
  2½" - 4" (75 mm - 110 mm) 150 psi

Features
- Available in PVC or CPVC.
- Threaded seal carrier.
- It allows for the seat to be adjusted while maintaining downstream system pressure.
- Union ends for easy installation and removal.
- Good mechanical strength.
- Corzan® CPVC: service temperatures up to 200°F (93°C) and exceptional corrosion resistance.
- O-Rings available in EPDM or Viton®.
- Seats available in Teflon®.
- Silicone-free construction.

FRA **Dimensions**
- ½" - 4" (20 mm - 110 mm)

Standards
- Standards: ASTM, Métrique, British Standard, JIS
- Versions à visser: NPT et BSP

Pression de service
- A 73°F: ½" - 2" (20 mm - 63 mm) 240 psi
  2½" - 4" (75 mm - 110 mm) 150 psi

Features
- Disponibles en PVC ou en CPVC.
- Porte-joint à visser (livré avec une clé de réglage).
- Possibilité de démonter la vanne tout en maintenant l'installation sous pression.
- Très facile d'installation et d'entretien.
- Bonne résistance mécanique.
- Corzan® CPVC: température de service jusqu'à 200°F (93°C) et très bonne résistance à la corrosion.
- Joints disponibles en EPDM ou Viton®.
- Garniture du boisseau en Teflon®.
- Produit sans silicone.

ESP **Medidas**
- ½" - 4" (20 mm - 110 mm)

Standards
- Standards disponibles: ASTM, Métrico, British Standard, JIS
- Versiones roscadas: NPT y BSP

Presión de servicio
- A 73°F: ½" - 2" (20 mm - 63 mm) 240 psi
  2½" - 4" (75 mm - 110 mm) 150 psi

Características
- Disponibles en PVC y CPVC.
- Portajuntas roscado.
- Permite el desmontaje de la válvula manteniendo la instalación bajo presión.
- Manguitos de unión pensados para su fácil instalación y mantenimiento.
- Buena resistencia mecánica.
- Corzan® CPVC: temperaturas de servicio hasta 200°F (93°C) y excepcional resistencia a la corrosión.
- Juntas disponibles en EPDM o Viton®.
- Junta de asiento de la bola en Teflon®.
- Construcción libre de silicona.

POR **Medidas**
- ½" - 4" (20 mm - 110 mm)

Standards
- Standards disponíveis: ASTM, Métrico, British Standard, JIS
- Versões roscadas: NPT e BSP

Pressão de serviço
- A 73°F: ½" - 2" (20 mm - 63 mm) 240 psi
  2½" - 4" (75 mm - 110 mm) 150 psi

Características
- Disponíveis em PVC e CPVC.
- Portajuntas roscado.
- Permite o desmontagem radial do corpo afrouxando as porcas.
- Uniões de ligação pensados para uma fácil instalação e manutenção.
- Boa resistência mecânica.
- Corzan® CPVC: temperaturas de serviço até 200°F (93°C) e excepcional resistência à corrosão.
- Juntas disponíveis em EPDM ou Viton®.
- Juntas assentamento esfera em Teflon®.
- Produto sem silicone.

Materials / Matériaux / Materiales / Materiais

ENG **Parts**
1. Stem
2. Ball
3. Union nut
4. Handle
5. End connector
6. Seat
7. Stem O-Ring
8. Body O-Ring
9. Dampener seal
10. End connector O-Ring
11. Adjusting tool
12. Body
13. Seal-carrier

FRA **Pièces**
1. Axe
2. Boisseau
3. Ecrou
4. Poignée
5. Collet
6. Garniture boisseau
7. Joint de l'axe
8. Joint du corps
9. Joint siège
10. Joint du collet
11. Clé de réglage
12. Corps
13. Porte-joint

ESP **Despiece**
1. Eje
2. Bola
3. Tuerca
4. Conjunto maneta
5. Manguito enlace
6. Junta asiento
7. Junta eje
8. Junta cuerpo
9. Junta amortiguación
10. Junta manguito
11. Llave de regulación
12. Cuerpo
13. Portajuntas

POR **Peças**
1. Eixo
2. Esfera
3. Porca
4. Manípulo
5. União
6. Junta assent. bola
7. Junta eixo
8. Junta corpo
9. Junta amortecim ento
10. Junta colarinho
11. Chave de regulação
12. Corpo
13. Portajuntas

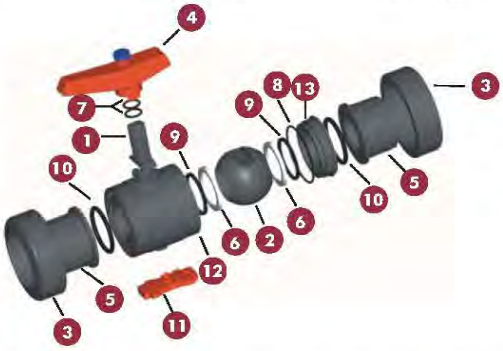

1 2 3 5 12 13 PVC / CPVC
7 8 9 10 EPDM / Viton®
11 ABS
4 PP
6 Teflon®

Dimensions / Dimensions / Dimensiones / Dimensões

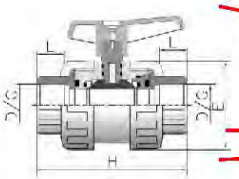

D/G		L		H		E	
"	mm	"	mm	"	mm	"	mm
3/8"	16	0.63	16	3.31	84	2.05	52
½"	20	0.63	16	3.31	84	2.05	52
¾"	25	0.75	19	4.25	108	2.44	62
1"	32	0.87	22	4.88	124	2.76	70
1¼"	40	1.02	26	5.59	142	3.31	84
1½"	50	1.22	31	6.57	167	4.09	104
2"	63	1.50	38	7.80	198	4.72	120
2½"	75	1.73	44	9.13	232	5.83	148
3"	90	2.01	51	10.59	269	7.05	179
4"	110	2.40	61	10.83	275	7.05	179

Pressure rates / Pressions / Presiones / Pressões

Pressure / Temperature Graph
Diagramme Pression / Température
Diagrama Presión / Temperatura
Diagrama Pressão / Temperatura

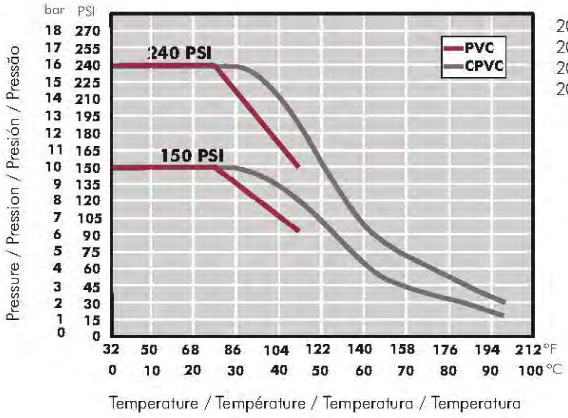

20 years / water flow
20 années / fluide de l'eau
20 años / fluido agua
20 anos / caudal de água

521 Brass Swing Check Valve

MATCO-NORCA™

Product Spec Sheet

- Swing Type
- Screwed Cap
- Integral Seats
- Cast Brass
- Insert Threaded or Solder Ends

200 PSI Non Shock WOG 125 PSI SWP

Applications: Commercial, Light Industrial for Water, Oil, Gas or Steam

Threaded Ends Conform to ANSI Standards B2.1
Solder Ends Conform to ANSI Standard B16.18
Valves are Tested in Accordance with MSS-SP-82

521N Also Available

Same As 521 With Neoprene Disc

DIMENSIONS

SIZE (inches)	H	L	L1	Weights (lbs) 521T	521C	521N
3/8	1.50	-	-	.38	-	.42
1/2	1.50	2.07	2.56	.40	.36	.40
3/4	1.60	2.34	3.15	.52	.52	.54
1	1.69	2.58	3.82	.68	.74	.72
1-1/4	1.85	3.15	4.29	1.24	1.24	1.32
1-1/2	2.17	3.49	4.89	1.72	1.58	1.74
2	2.72	4.20	5.51	2.60	2.62	2.70
2-1/2	2.96	5.16	-	4.40	-	4.56
3	3.82	5.79	-	6.62	7.08	6.90
4	3.94	6.86	-	10.18	-	10.54

MATERIAL SPECIFICATIONS

NO.	PART	MATERIAL	ASTM SPEC
1	Body	Brass	B584 C857
2	Disc	Brass	B124 C377
3	Seat	BUNA	Commercial
4	Nut	Brass	B16 C360
5	Pin	Brass	B16 C360
6	Plug	Brass	B16 C360
7	Cap	Brass	B584 C857

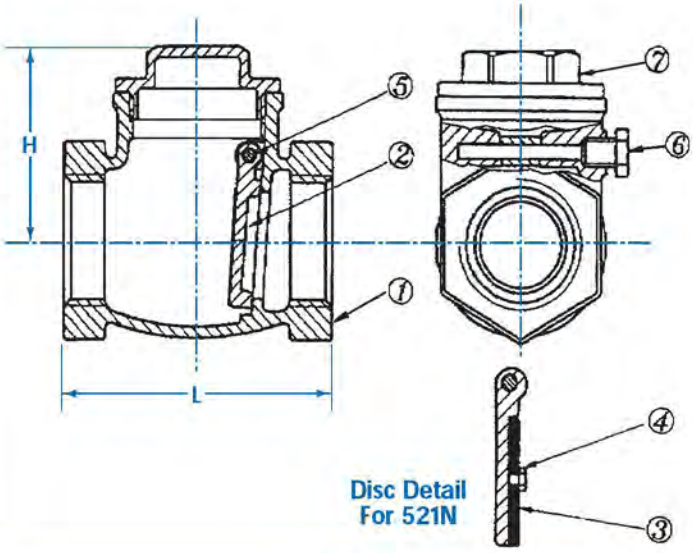

IPS

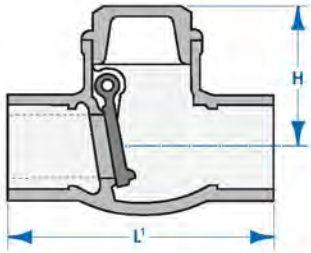

C x C

MATCO-NORCA™ **BREWSTER:** TEL: 800-431-2082 FAX: 800-640-2252 **HOUSTON:** TEL: 800-935-5456 FAX: 800-683-4247

Model Industrial RCDL	Nutating Disc Meter (Bronze and Thermoplastic)	Technical Brief

GENERAL

Badger's RCDL positive displacement meters are one of the most cost effective methods in metering industrial fluids. The RCDL meter's simple but efficient design assures high accuracy and repeatability over the entire meter flow range.

Available in sizes, 1/2" through 2" for flows up to 170 GPM, these meters are extremely rugged and reliable. Maintenance is seldom required, but if necessary, takes but a few minutes. All parts are designed and built of materials to meet your application, providing you with long life and a trouble-free, precision flow meter.

To complement the RCDL meter line, Badger offers a complete line of accessories that includes totalizers, electromechanical and electronic transmitters, rate of flow indicators and batch/process controllers.

OPERATION

The metering principle, known as positive displacement, is based on the continuous filling and discharging of the measuring chamber. Controlled clearances between the disc and the chamber insure minimum leakage for precise measurement of each volume cycle. As the disc nutates, the center spindle rotates a magnet, whose movement is sensed through the meter wall by a follower magnet or by electronic sensors. Each revolution of the magnet is equivalent to a fixed volume of fluid, which is converted to any engineering unit of measure for totalization, indication or process control.

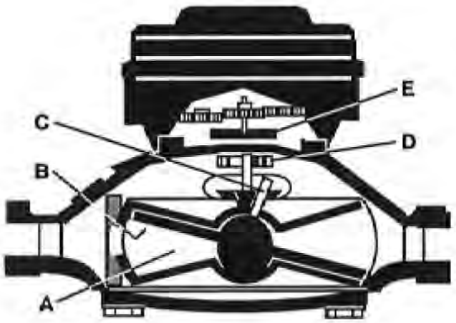

Liquid flowing through the meter chamber (A) causes a disc (B) to nutate or wobble. This motion, in turn, results in the rotation of a spindle (C) and drive magnet (D). Rotation is transmitted through the wall of the meter to a second magnet (E) which operates the transmitter.

FEATURES

- **Accuracy: ±1.5% over full range**
- **Repeatability: ±0.5%**
- **Wide flow range**
- **Rugged bronze or thermoplastic housing**
- **Maximum Operating Temperature**
- **Plastic Housing: 100° F**
- **Bronze Housing: 120° F**
- **Models 25 and 70; Bronze: 250° F Option**
- **Maximum Operating Pressure: 150 PSI**
- **Easily maintained without removing from line**
- **Durable components for minimal maintenance**
- **Wide range of compatible accessories**

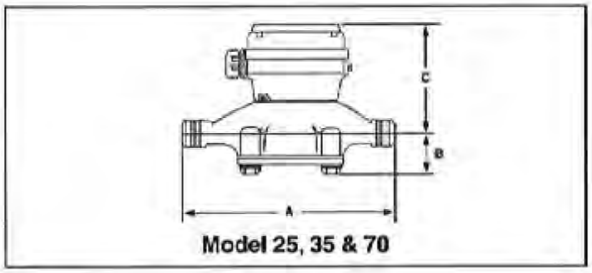

Model 25, 35 & 70

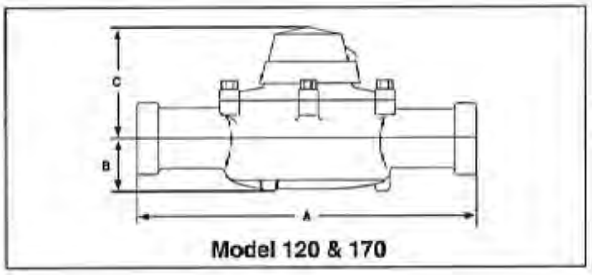

Model 120 & 170

SPECIFICATIONS

Dimensions in Inches (Without Register)

Meter Model	Meter Size Inches	Housing Material	A Meter Length	B Center Line To Base	Meter Length with Conn.	Flow Rates - Gallons: Cold Liquids 32° F to 120° F	Flow Rates - Gallons: Hot Water Chemicals & Oils 32° F to 250° F (BZ) 32° F to 100° F (PL)	Approx. Weight Pounds
M25	5/8	BZ or PL	7-1/2	1-3/8	12-7/16	1/2 - 25	1 - 25	5
M25	3/4	BZ or PL	7-1/2	1-3/8	12-5/8	1/2 - 30	1 - 30	5
M35	3/4	BZ	9	1-3/4	14-1/8	3/4 - 35	N/A	6
M40	1	PL	10-3/4	2-1/4	16-3/16	3/4 - 50	N/A	5
M70	1	BZ	10-3/4	2-1/4	16-5/8	1 - 70	5 - 70	12
M120	1-1/2	BZ	12-5/8	2-5/8	19-3/4	2 - 120	*See Note	20
M170	2	BZ	15-1/4	3-3/8	22-7/8	2 - 170	N/A	30

BZ = Bronze; PL = Plastic
NPT connection set assemblies available.

N/A = Not available in High Temperature / Chemical option.

HEIGHT DIMENSIONS (INCHES) (C) WITH REGISTER AND ACCESSORIES

Meter Size	With Non Resetable Register	With Transmitter	With MS-ER1 Transmitter	With ECA Transmitter	With 258 Register	With Series 76 Registers
5/8 & 5/8 x 3/4	5-3/4	7-3/8	11-1/4	9-3/8	8	15-1/4
3/4	6-1/8	7-3/4	11-5/8	9-3/8	8-3/8	15-5/8
1 & 1 x 1-1/4	7-1/2	9-1/8	13	11-3/16	9-3/4	17
1-1/2	9-1/8	10-3/8	14-1/4	12-3/4	11	18-1/4
2	10-3/4	12-1/4	16-1/8	14-3/8	12-7/8	20-1/8

MATERIALS OF CONSTRUCTION

	Cold Liquid Units	High Temp. and/or Chemical Units Models 25 & 70
Housing:	BZ or PL	BZ - 250° F PL - 100° F
Chamber:	Noryl	LCP
Disc:	SAN	LCP
Crossbar:	Nylon	Ultem
Magnetic Assembly:	Nylon	Ultem
Chamber Retainer:	Polyethylene	Metal Clip
Screen:	Polypropylene	None

PRESSURE LOSS CHART
Industrial Disc Meters
Rate of Flow in Gallons Per Minute

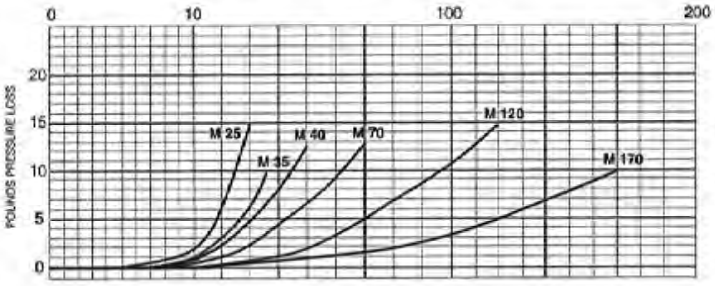

PERFORMANCE
Accuracy: ± 1.5%
Repeatability: ± 0.5%
Max. Operating Pressure: 150 PSI

*Note: Available for chemicals or fluids not to exceed 110° F (43° C)

Please see our website at
www.badgermeter.com
for specific contacts.

Due to continuous research, product improvements and enhancements, Badger Meter reserves the right to change product or system specifications without notice, except to the extent an outstanding bid obligation exists.

BadgerMeter, Inc.
P.O. Box 245036, Milwaukee, WI 53224-9536
Telephone: (414) 355-0400 / (800) 456-5023
Fax: (414) 355-7499 / (866) 613-9305
www.badgermeter.com

Copyright © Badger Meter, Inc. 2009. All rights reserved.

Model RTR®	Recordall® Transmitter Register	Technical Brief

DESCRIPTION

APPLICATIONS: The Recordall® Transmitter Register (RTR®) is designed for use with all Recordall Disc, Turbo, Compound and Fire Service Meters to provide output compatibility with ORION®, Itron® ERT®, TRACE®, and Badger Meter, Inc. approved AMR technology solutions.

RESOLUTION: Digital output from the RTR typically has resolution of 1/10th of the register test circle (resolution may vary in some cases). The electronic resolution table in this brochure lists minimum output resolution for all Recordall meter applications.

MOUNTING: The RTR in its shroud assembly uses a bayonet mount compatible with all Recordall disc and turbo II meters. A TORX® seal screw is provided to allow positioning of the register for the most convenient reading and to secure the register to the meter body in a tamper resistant mode. The RTR can be removed from the meter without disrupting water service.

MAGNETIC DRIVE: Direct drive high-strength magnetic coupling through the meter body to the wetted magnet provides reliable and dependable register coupling.

SEALED REGISTER: The RTR local register consists of a six-digit straight-reading mechanical odometer totalizer (located in the six o'clock position), a 360° test circle with sweep hand, and a flow finder to detect leaks. The register gearing is self-lubricating thermoplastic to minimize friction and provide long, reliable life. Permanent sealing eliminates moisture, dirt, and other contaminants. (The leak rate of the seal is less than 10^{-6} cc/sec as tested by a helium mass spectrometer.)

TAMPER-PROOF FEATURES: Customer removal of the RTR can be prevented by using a tamper resistant TORX seal screw. Torx seal screws are provided as standard accessories with the RTR. Optional tamper detection seal wire screws are also available.

CONSTRUCTION: The housing of the RTR is constructed of a strengthened glass lens top and a corrosion-resistant metal bottom. Internal construction materials are thermoplastics for long-life and high reliability. The integrity of the adhesive seal joining the glass top to the metal base provide unmatched protection in water meter applications. A corrosion and tamper resistant Torx seal screw is provided to secure the RTR to the meter. The shroud assembly is thermoplastic.

TEMPERATURE: The operating range of the RTR is -40° C to 49° C (-40°F to 120°F). The water meter should not be subjected to temperatures below freezing.

MOISTURE: The RTR achieves true water resistance due to the adhesive technology used in the sealing process. Leak rates less than 10^{-6} cc/sec. as tested by a helium mass spectrometer, are comparable to a true hermetic seal. Due to this unique sealing process, the RTR exceeds all applicable requirements of AWWA Standard C707 regarding moisture intrusion. Register fogging and condensation are no longer an issue.

WIRE CONNECTIONS: The RTR is provided as either a factory prewired assembly or as a register with pre-sized wire harness available for connection in the field.

ELECTRONICS: The piezoelectric switch circuit board is completely sealed against moisture inside the unit and sealed to ensure protection from humidity.

ELECTRICAL: The electronic circuitry is designed to provide immunity to electrical surges and transients per IEC801-2, IEC801-4 Severity Level 4.

SPECIFICATIONS

Transmitter/Register	Straight reading, permanently sealed, magnetic drive
Unit of Measure	U.S. Gallons, Cubic Feet, Cubic Meters, clearly identified on register face
Number Wheels	Six with 3/16" high numerals font type
Test Circle	360° circle with ten major increments with ten divisions each
Weight	9 Ounces
Humidity	0% to 100% Condensing
Temperature	-40°C to 49°C (-40°F to 120°F)
Signal Characteristics	Open Drain (FET)
Visual Resolution	1/100th of Test Circle
Electronic Resolution	1/10th of Test Circle
Typical Signal Duration	15 ms to 75 ms @ 25°C (77°F) 8 ms to 75 ms over operating temperature range at 67 µA
On State Resistance	7.5 Ohms @ 25°C (77°F)
Power Source	External
Maximum Switching	30 VDC @ 1 mA @ 25°C (77°F)

OPERATING CHARACTERISTICS: The RTR has an output equal to 1/10th of the meter test circle with the characteristics of an open drain FET. The on-state condition is a solid-state switch closure. Off-state condition is an open circuit. Powered by an external source, the RTR has a maximum rating of 30 VDC at 1 mA (25°C).

Itron® and ERT® are a registered trademarks of Itron, Inc. TRACE® is a registered trademark of American Meter Company. Badger®, Recordall®, RTR® and ORION® are registered trademarks of Badger Meter, Inc. TORX® is a registered trademark of Camcar, Division of Textron, Inc.

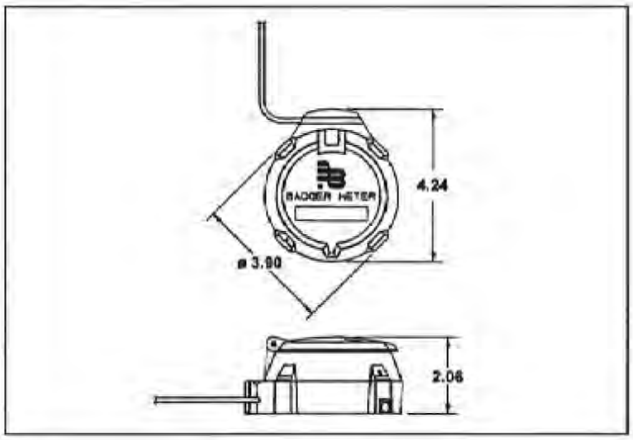

Dimensional Drawing

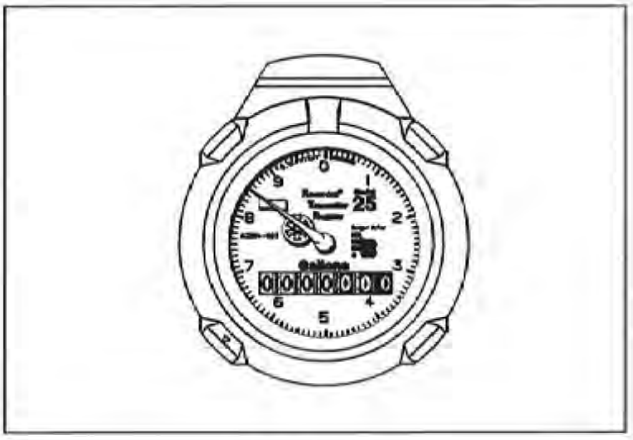

RTR Register

MEASUREMENT RESOLUTION: The minimum electronic resolution of the RTR is as noted below. To verify the correct resolution for your application, contact your Badger Meter regional sales office.

RECORDALL© Disc Series	Size	Resolution Gallons	Resolution Cubic Feet (Ft³)	Resolution Cubic Meters (m³)
M25	5/8"	1	0.1	0.01
M25	3/4"	1	0.1	0.01
M35	3/4"	1	0.1	0.01
M40	1"	1	0.1	0.01
M55	1"	1	0.1	0.01
M70	1"	1	0.1	0.01
M120	1 1/2"	10	1	0.1
M170	2"	10	1	0.1

RECORDALL Turbo Series	Resolution Gallons	Resolution Cubic Feet (Ft³)	Resolution Cubic Meters (m³)
1 1/2"	100	10	0.1
2"	100	10	0.1
3"	100	10	0.1
4"	100	10	0.1
6"	100	10	1
8"	100	10	1
10"	100	10	1
12"	1000	100	1
16"	1000	100	10
20"	1000	1000	10

⚠CAUTION

The RTR® should only be connected to a Badger Meter, Inc. approved product. Connection to an unapproved product will void the RTR warranty.

Fire Service Meters	Resolution Gallons	Resolution Cubic Feet (Ft³)	Resolution Cubic Meters (m³)
3"	100	10	0.1
4"	100	10	0.1
6"	100	10	1
8"	100	10	1
10"	100	10	1

RECORDALL Compound Series	Resolution Gallons	Resolution Cubic Feet (Ft³)	Resolution Cubic Meters (m³)
2"	100	10	0.1
3"	100	10	0.1
4"	100	10	0.1
6"	100	10	1

Resolution stated as summed total with (2) RTRs, Summator/Splitter and a single AMR module. Please see the Turbo Series and Disc Series sections for individual high and low side resolution.

Fire Series Assemblies (FSA)	Resolution Gallons	Resolution Cubic Feet (Ft³)	Resolution Cubic Meters (m³)
4"	100	10	0.1
6"	100	10	1
8"	100	10	1
10"	100	10	1

Resolution stated as summed total with (2) RTRs, Summator/Splitter and a single AMR module. Please see the Turbo Series and Disc Series sections for individual mainline and by-pass resolution.

Please see our website at
www.badgermeter.com
for specific contacts.

Due to continuous research, product improvements and enhancements, Badger Meter reserves the right to change product or system specifications without notice, except to the extent an outstanding bid obligation exists.

BadgerMeter,Inc.
P.O. Box 245036, Milwaukee, WI 53224-9536
(800) 876-3837 / Fax: (888) 371-5982
www.badgermeter.com

Copyright Badger Meter, Inc. 2010. All rights reserved.

VAPORPROOF CEILING FIXTURES

Durable, versatile and economical. Use RAB vaporproof incandescent or fluorescent lighting for non-hazardous locations

Die cast aluminum for superior durability

Set screw keeps guard securely in place

All brass hardware

Close-up plugs allow Phillips or slotted screwdrivers for easy installation

Junction box with sturdy mounting lugs

One piece die cast aluminum guards threaded for secure fit

UL Listed for use with 90ºC supply wiring OK for use in dwellings and wet locations

High temperature silicone internal gaskets

Premium porcelain socket with 150ºC 8" long leads

Adapter plate included with VC fixtures

Clear heat resistant glass globes standard Polycarbonate Permaglobes available

Packed partially assembled for fast installation

1,850 RAB Vaporproof Lights formed the Olympic Rings in the mountains above Salt Lake City

Product Information

Natural Fixture with:

- clear glass & die cast guard
- clear glass & wire clamp guard
- clear glass globe
- clear Permaglobe
- white Permaglobe
- Fixture less globe
- 13 watt Fluorescent, 120 Volt Lamp included — CFL
- 22 watt Fluorescent, 120 Volt Lamp included — CFL
- 3/4" tapped hubs

Finish- Add suffix:
- Silver Gray
- White
- Black

Specifications

UL Listing:
Suitable for wet locations.
Suitable for use in dwellings.
Suitable for use with 90ºC supply wiring.
Complies with UL Standard 1598. For non-hazardous locations where the lamp, socket and wiring require protection from rain, corrosive fumes, non-combustible dusts, moisture, non-explosive vapors and gases. For lamp base up installation only when outdoors.

Wattage:
See catalog number chart for maximum wattage with clear glass, colored glass and Permaglobes.

Hub Size:
1/2" or 3/4" NPS. Metric size hub taps available. Consult factory.

Globes:
Clear thermal shock resistant soda lime glass standard. Colored and white glass globes available. Unbreakable RAB Permaglobes available in clear and in color. See page 136.

Reflectors:
Highly reflective white baked polyester epoxy powder finish over a heavy gauge aluminum base. Reflectors thread onto fixtures. See page 138.

Finish:
Natural unpainted finish standard. Painted finishes of Silver Gray (add suffix S), White (add W) and Black (add B). Other finish colors available. Consult factory.

Construction:
Die cast aluminum with brass screws

Guard:
One piece die cast aluminum with set screw

Wire Guard:
8 gauge steel wire with silver powder coat

Socket:
Incandescent: Premium porcelain with 150ºC 8" leads attached. Fastened with 2 brass screws.
CFL: 13w = GX23-2 Base
22w = GX32d-2 Base

Fax Info on Demand 24/7
Call RAB FaxBack at 888 722-1236.
Enter document numbers shown below:

	Catalog Page	Installation Manual
VX, VP, VC & VLX	470	471

For more info on RAB FaxBack see p.170

Cross References:
Available on pages 162 and at www.rabweb.com

Special Globes

Colored globes (White, Red, Blue, Green or Amber) in cylindrical or ball shapes are available in glass or polycarbonate. Order a vaporproof fixture less globe and combine it with a Globe from page 136.

Glass

Red Blue Green Amber Clear Prismatic

Polycarbonate

Red Blue Green Amber Ball

RAB TEL 888 RAB 1000
FAX 888 RAB 1232
www.rabweb.com

VX 4" Box

Box mount, die cast aluminum with built-in junction box and sturdy mounting lugs. Medium base socket, 1/2" or 3/4" NPS hub size and a variety of globes. Incandescent up to 300 watts (lamp not supplied).
CFL: 13 or 22 watts (lamp included).

Finish:
- Natural
- Silver Gray
- White
- Black

VX100DG shown in natural, silver gray, white and black

VP Pendant

Pendant mount, die cast aluminum construction. Medium base socket, 1/2" or 3/4" NPS pendant thread and a variety of globes. Incandescent up to 200 watts (lamp not supplied).
CFL: 13 or 22 watts (lamp included).

Finish:
- Natural
- Silver Gray
- White
- Black

VP100DG shown in natural

VC Ceiling

Die cast aluminum construction. Mounts to existing surface or recessed 4" boxes. Adapter plate provided. Medium base socket and a variety of globes. Incandescent up to 150 watts (lamp not supplied).
CFL: 13 or 22 watts (lamp included).

Finish:
- Natural
- Silver Gray
- White
- Black

VC100DG shown in natural

VLX 3" Box

Die cast aluminum with built-in 3" junction box and sturdy mounting lugs. Medium base socket, 1/2" or 3/4" NPS hub size and a variety of globes. Incandescent up to 150 watts (lamp not supplied).
CFL: 13 or 22 watts (lamp included).

Finish:
- Natural

VLX100DG shown in natural

Catalog Numbers

100 Series Max Watts	200 Series Max Watts	100 Series Max Watts	200 Series Max Watts	100 Series Max Watts	200 Series Max Watts	100 Series Max Watts
150w Clear Glass	300w Clear Glass	150w Clear Glass	200w Clear Glass	100w Clear Glass	150w Clear Glass	150w Clear Glass
100w Colored Glass	200w Colored Glass	100w Colored Glass	150w Colored Glass	100w Colored Glass	100w Colored Glass	100w Colored Glass
75w Permaglobe	100w Permaglobe	75w Permaglobe	100w Permaglobe	75w Permaglobe	100w Permaglobe	75w Permaglobe
VX100DG	VX200DG	VP100DG	VP200DG	VC100DG	VC200DG	VLX100DG
VX100G	VX200G	VP100G	VP200G	VC100G	VC200G	
VX100	VX200	VP100	VP200	VC100	VC200	
VX100P	VX200P	VP100P	VP200P	VC100P	VC200P	
VX100PW	VX200PW	VP100PW	VP200PW	VC100PW	VC200PW	
VX1	VX2	VP1	VP2	VC1	VC2	
add /F13		add /F13		add /F13		
	add /F22		add /F22		add /F22	
add -3/4	add -3/4	add -3/4	add -3/4	add -3/4	add -3/4	
add S	add S	add S	add S	add S	add S	
add W	add W	add W	add W	add W	add W	
add B	add B	add B	add B	add B	add B	
For Natural & 1/2" taps, no suffix needed.		For Natural & 1/2" taps, no suffix needed.		For Natural, no suffix needed.		

Dimensions

VX100DG & VX200DG

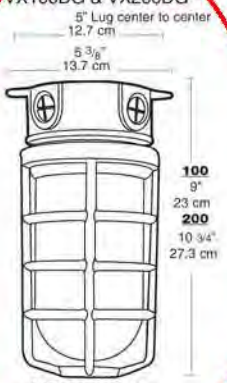

VP100DG & VP200DG

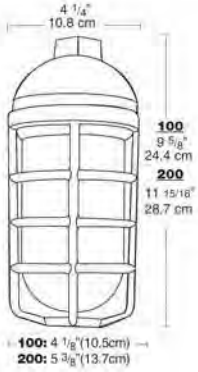

VC100DG & VC200DG

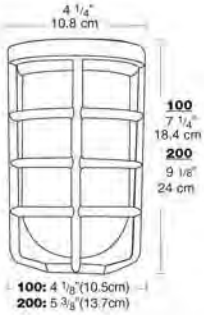

VCADPLT
Adapter plate
(VC fixtures only)

VLX100DG & VLX200DG

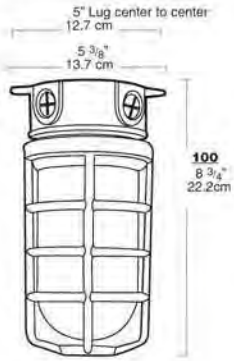

TEL 888 RAB 1000
FAX 888 RAB 1232
www.rabweb.com
RAB

RTD

Single and Duplex Element RTDs

The RTD elements illustrated and described on this page are designed to measure temperature in a variety of process and laboratory applications. These RTDs are specifically designed for use in two different process temperature ranges and will provide accurate and repeatable temperature measurement through a broad range. Low range RTDs are constructed using Teflon® insulated silver plated copper internal leads, with potting compounds to resist moisture penetration. High range RTDs are constructed with nickel internal leads inside swaged MgO insulated cable to allow higher temperature measurements at the RTD element and to provide higher temperature lead protection along the sheath. The following tables allow customer selection of standard element materials, initial accuracies, sheath materials and diameters, mounting fittings and terminations. Custom built assemblies with non-standard specifications are available upon request.

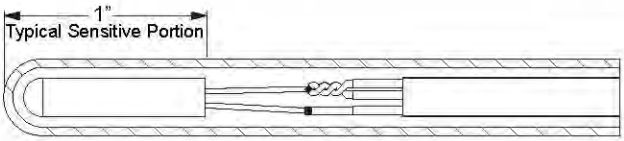

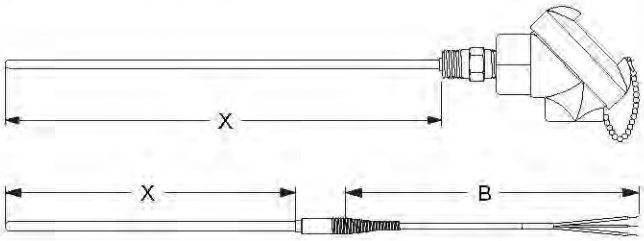

ORDER CODES

Example Order Number: **R5T185L** (1-1) **48** (1-2) **3** (1-3) - **006** (1-4) - Page RTD-2 - Page RTD-3 or Page RTD-4 - Page RTD-5 - Page RTD-6

1-1 Single Platinum RTD Elements / **1-2 Available Sheath Diameters 316SS**

CODE	INITIAL ELEMENT ACCURACY @ 0 °C	BASE RESISTANCE @ 0 °C	TEMPERATURE COEFFICIENT	CODE			
LOW RANGE WIRE WOUND (-200 to 204) °C [-328 to 400] °F				*1/8" OD*	*3/16" OD*	*1/4" OD*	*3/8" OD*
R1T185L	± 0.1%	100 Ω	$\alpha = 0.003\ 85\ °C^{-1}$	28	38	48	68
R3T185L	± 0.03%	100 Ω	$\alpha = 0.003\ 85\ °C^{-1}$	28	38	48	68
R5T185L	± 0.01%	100 Ω	$\alpha = 0.003\ 85\ °C^{-1}$	28	38	48	68
R1T192L	± 0.1%	100 Ω	$\alpha = 0.003\ 92\ °C^{-1}$	28	38	48	68
R3T192L	± 0.03%	100 Ω	$\alpha = 0.003\ 92\ °C^{-1}$	28	38	48	68
R1T125L	± 0.1%	200 Ω	$\alpha = 0.003\ 85\ °C^{-1}$	N/A	38	48	68
LOW RANGE THIN FILM (-40 to 204) °C [-40 to 400] °F							
RBF185L	± 0.12%	100 Ω	$\alpha = 0.003\ 85\ °C^{-1}$	28	38	48	68
RAF185L	± 0.06%	100 Ω	$\alpha = 0.003\ 85\ °C^{-1}$	28	38	48	68
RBF155L	± 0.12%	500 Ω	$\alpha = 0.003\ 85\ °C^{-1}$	28	38	48	68
RBF195L	± 0.12%	1000 Ω	$\alpha = 0.003\ 85\ °C^{-1}$	28	38	48	68
HIGH RANGE WIRE WOUND (-200 to 600) °C [-328 to 1112] °F							
R1T185H	± 0.1%	100 Ω	$\alpha = 0.003\ 85\ °C^{-1}$	28	38	48	68
R1T192H	± 0.1%	100 Ω	$\alpha = 0.003\ 92\ °C^{-1}$	28	38	48	68

1-4 Length

CODE
2"-002

1-3 Element Connection

CODE	DESCRIPTION
2	2 wire
3	3 wire
4[1]	4 wire
[1] Not available in duplex	

1-1 Duplex Platinum RTD Elements / **1-2 Available Sheath Diameters 316SS**

CODE	INITIAL ELEMENT ACCURACY @ 0 °C	BASE RESISTANCE @ 0 °C	TEMPERATURE COEFFICIENT	CODE		
LOW RANGE WIRE WOUND (-200 to 204) °C [-328 to 400] °F				*3/16" OD*	*1/4" OD*	*3/8" OD*
R1T285L	± 0.1%	100 Ω	$\alpha = 0.003\ 85\ °C^{-1}$	38	48	68
R3T285L	± 0.03%	100 Ω	$\alpha = 0.003\ 85\ °C^{-1}$	38	48	68
R5T285L	± 0.01%	100 Ω	$\alpha = 0.003\ 85\ °C^{-1}$	38	48	68
R1T292L	± 0.1%	100 Ω	$\alpha = 0.003\ 92\ °C^{-1}$	38	48	68
R3T292L	± 0.03%	100 Ω	$\alpha = 0.003\ 92\ °C^{-1}$	38	48	68
LOW RANGE THIN FILM (-40 to 204) °C [-40 to 400] °F						
RBF285L	± 0.12%	100 Ω	$\alpha = 0.003\ 85\ °C^{-1}$	38	48	68
RAF285L	± 0.06%	100 Ω	$\alpha = 0.003\ 85\ °C^{-1}$	38	48	68
RBF295L	± 0.12%	1000 Ω	$\alpha = 0.003\ 85\ °C^{-1}$	38	48	68
HIGH RANGE WIRE WOUND (-200 to 600) °C [-328 to 1112] °F						
R1T285H	± 0.1%	100 Ω	$\alpha = 0.003\ 85\ °C^{-1}$	38	48	68
R1T292H	± 0.1%	100 Ω	$\alpha = 0.003\ 92\ °C^{-1}$	38	48	68
Consult factory for other RTD types.						

1-2A

CODE	NOMINAL SHEATH DIAMETER (inches)	TIP DIA. OD (inches)	TIP LENGTH (inches)
88R48	1/2	1/4	1 1/4
68R38	3/8	3/16	1 1/4
48R28	1/4	1/8	1 1/4

REDUCED TIP RTD's

Table 1-2A lists RTD elements with reduced tip sheaths. To order, use order code numbers from Tbl. 1-2A in place of straight sheath order code numbers from Tbl. 1-2. Other reduced tips are available upon request. EXAMPLE: R1T185L88R483-006.

Pyromation, Inc.
© Copyright 2006 Pyromation, Inc., All Rights Reserved.

Optional Sheath Mounting Fittings and Bends

Select Sheath Mounting or Bend Options as desired from tables below.

COMPRESSION FITTING

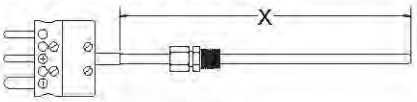

FIXED BUSHING

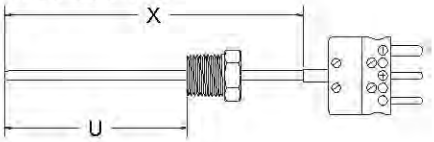

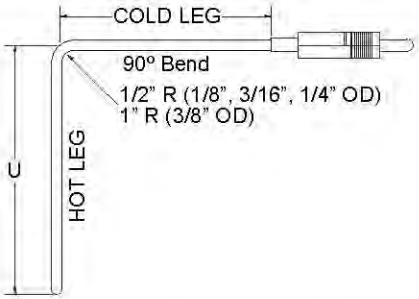

BAYONET CAP and SPRING (OPTION 13A)

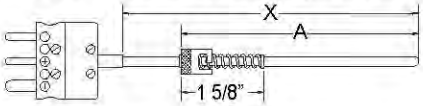

ADJUSTABLE FLANGE (OPTION 14)

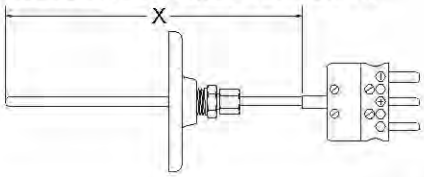

ORDER CODES

Example Order Number: **R5T185L483-006 - 01A,304 - PAGE RTD 3 - PAGE RTD 4 - PAGE RTD 5 - PAGE RTD 6**

2

2-1 No Fitting or Bend Options

CODE	
	00

2-2 One-time Adjustable Compression Fittings

CODE	TYPE	NPT SIZE (inches)	PRESSURE RATED	AVALABLE SHEATH DIAMETERS (inches)
01A	303 stainless steel	1/8	NO	1/16, 1/8, 3/16, 1/4
05A	316 stainless steel	1/8	YES	1/16, 1/8, 3/16, 1/4
05B	316 stainless steel	1/4	YES	1/8, 3/16, 1/4, 3/8
05C	316 stainless steel	1/2	YES	1/8, 1/4, 3/8
15A	Brass	1/8	NO	1/8, 3/16, 1/4
15B	Brass	1/4	NO	3/16, 1/4, 3/8
15C	Brass	1/2	NO	1/4, 3/8

2-3 Re-adjustable Compression Fittings

CODE	TYPE	NPT SIZE (inches)	AVALABLE SHEATH DIAMETERS (inches)
10A	303 stainless steel	1/8	1/16, 1/8, 3/16
10B	303 stainless steel	1/4	1/4, 3/8
10C	303 stainless steel	1/2	1/4, 3/8
12A	316 stainless steel	1/8	1/16, 1/8, 3/16, 1/4
12B	316 stainless steel	1/4	1/8, 3/16, 1/4, 3/8
12C	316 stainless steel	1/2	1/8, 1/4, 3/8
11A	Brass	1/8	1/16, 1/8, 3/16, 1/4
11B	Brass	1/4	1/8, 3/16, 1/4, 3/8
11C	Brass	1/2	1/4, 3/8
19C	Spring loaded SS well fitting	1/2	3/16, 1/4

Teflon® gland standard 204 °C [400 °F] max. For lava gland 649 °C [1200 °F] max. opt. 10A and 10B only use letter suffix "L" after compression fitting order code. EX: 10AL for lava gland.

2-6 Miscellaneous Options

CODE	TYPE	AVALABLE SHEATH DIAMETER (inches)
13A _ _ [1]	Spring-loaded bayonet fitting	1/8, 3/16
14	Adjustable flange with brass compression fitting	1/8, 3/16, 1/4, 3/8
16A	Spring-loaded adjustable bayonet compression fitting	1/8

[1] When ordering fixed bayonet fitting specify dimension "A". EX: order code 13A06 is for a fixed bayonet adapter with 6" A Dimension.

2-5 Fixed Bushings

CODE 316 SS	MOUNTING THREAD NPT (inches)	AVALABLE SHEATH DIAMETERS (inches)
8A _ _ [1]	1/8	1/8, 3/16, 1/4
8B _ _ [1]	1/4	1/8, 3/16, 1/4, 3/8
8C _ _ [1]	1/2	1/8, 3/16, 1/4, 3/8
8D _ _ [1]	3/4	1/8, 3/16, 1/4, 3/8

[1] When ordering fixed bushings, specify order code above, plus insertion length "U", as measured from hot tip to bottom of threaded bushing. EX: order code 8A06 is 1/8" NPT, 316 SS bushing located 6" from hot tip.

2-4 Sheath Bends

CODE	DESCRIPTION
2 _ _	Sheath bent 45º
3 _ _	Sheath bent 90º
2" minimum hot leg length	

When ordering bend options, specify hot leg dim. "U". Ex :order code 206 is a 45° bend with 6" hot leg. Total sheath length is Table 1 "X" length = hot leg plus cold leg.

© Copyright 2006 Pyromation, Inc., All Rights Reserved.

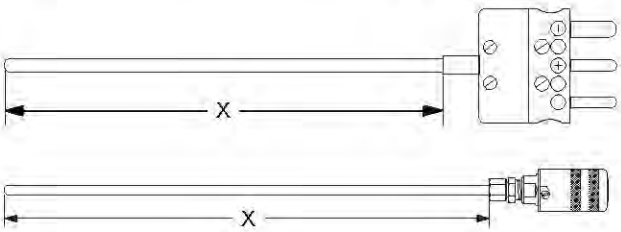

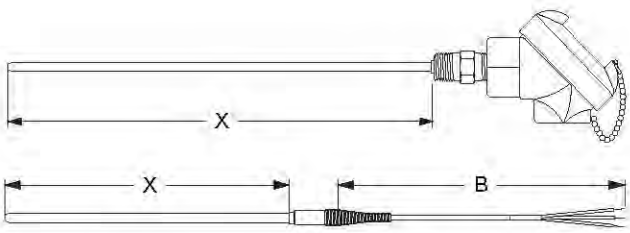

ORDER CODES

Example Order Number:

R5T185L483-006-00 - 8HN 31, I or SEE RTD-4 FOR SHEATH TERMINATIONS AND LEADWIRE TRANSITION OPTIONS

(3-1A: 8HN; 3-2A: 31; 3-3A: I)

3-1A Head Mounting Fittings For Standard Heads

For head terminations, a head mounting fitting must be selected

CODE	DESCRIPTION
6HN	1/2" x 1/2" NPT steel hex nipple
8HN	1/2" x 1/2" NPT stainless steel hex nipple
9HP	1/2" NPT stainless steel bushing (no process threads)
8RNDC	3/4" process x 1/2" NPT stainless steel hex nipple

Head Mounting Fittings For Miniature Heads Options 17 & 25

CODE	DESCRIPTION
8HPB	1/4" NPT stainless steel bushing (no process threads)
9HNB	1/4" x 1/4" NPT stainless steel hex nipple

3-2A Standard Head Terminations

CODE	DESCRIPTION
31	Aluminum screw cover head
34	Cast iron screw cover head
49	Flip top aluminum head
53	Grey delrin screw cover head
62	White DIN form B polypropylene head
63	White polypropylene head
71	Cast iron/aluminum explosion proof head Group C
72	DIN form B aluminum explosion proof head Group B
81	316L stainless steel explosion proof head Group C
82	DIN form B 316 stainless steel expolsion proof head Group B
91	316L stainless steel head
92	DIN form B 316 stainless steel head

3-2A Miniature Head Terminations

CODE	DESCRIPTION
17	Miniature plastic head
25	Miniature nickel plated head

3-2A Hex Fitting Termination Option Without Connection Heads

CODE	DESCRIPTION
22	3" individual Teflon® leads with terminal pins - 12" maximum leads
23	Extension lead wire beyond hex (requires table 5 & 6 selections)

3-3A Standard Head Options

CODE	DESCRIPTION
BX	Box connector
CT	Ceramic terminal block
GS	Ground screw
I	Stainless steel tag
NB	1/2" NPT nylon conduit reducer bushing
SB	1/2" NPT conduit reducer bushing
T-440[1]	4-20 mA Head mounted transmitter (see instrument section)
T-441[2]	4-20 mA Isolated Head mounted transmitter (see instrument section)
T-442[2]	4-20 mA Hart® Isolated Head mounted transmitter (see instrument section)
W[3]	Epoxy coated

[1] Not available with option 62, 72, 82, 92.

[2] Available with option 31, 62, 72, 82, 92 only.

[3] Available with option 31 and 71 only.

© Copyright 2006Pyromation, Inc., All Rights Reserved.

The Series 440 programmable RTD temperature transmitter is a two-wire transmitter with an analog output. It has measurement input for Pt100 resistance thermometers (RTD) in 2 or 3 wire connection. Setting up of the transmitter is done using the 440-CABLE. These small units can be mounted in Pyromation heads or they can be used for surface mounting by using a 35 mm DIN rail mounting clip.

TEMPERATURE HEAD TRANSMITTER

Universal head transmitter for Pt100 resistance thermometers (RTD) settable using a PC, for installation in a sensor head.

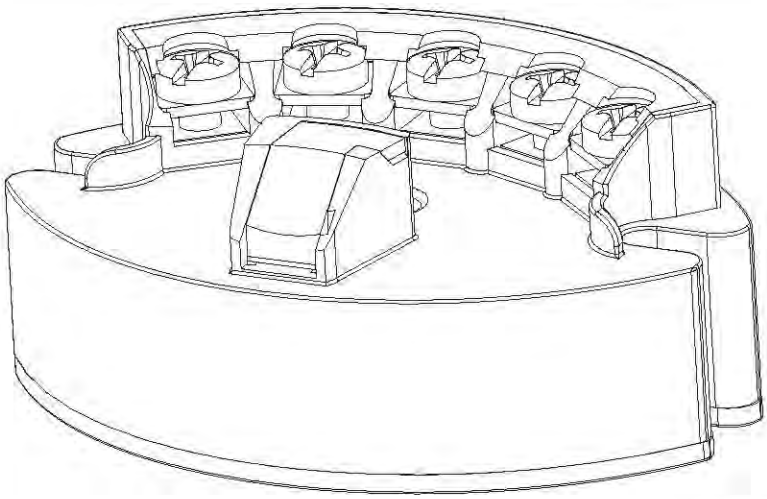

Patent #D350, 596

Application Areas

- PC programmable temperature head transmitter for converting Pt100 input signal into an scaleable (4 to 20) mA analog output signal
- Platinum Resistance thermometer (RTD)
- Online configuration using PC with SETUP connector.

Features and Benefits

- Universally PC programmable for Pt100 signals
- 2 wire technology, (4 to 20) mA analog output
- High accuracy in total ambient temperature range
- Fault signal on sensor break or short circuit
- RFI/EMI Protected, CE marked
- UL Recognized Component
- General Purpose and non-incendive for use in hazardous locations
- Online configuration during measurement using SETUP connector
- Output simulation

© Copyright 2006 Pyromation, Inc., All Rights Reserved.

ORDER CODES

Unconfigured Order Number: 440-00

Configured Order Number: **4 4 0 - 3 85 U - S 0-400 F**

1

CODE	DESCRIPTION
2	RTD (2-wire)
3	RTD (3-wire)

2

CODE	DESCRIPTION
85	100 ohm platinum (α = 0.003 85 $^{\circ}C^{-1}$)

3

CODE	DESCRIPTION
U	Upscale Burnout ≥ 21.0 mA
D	Downscale Burnout ≤ 3.6 mA

4

RANGE
S (lower limit – upper limit)

5

CODE	DESCRIPTION
C	Celsius
F	Fahrenheit

Accessories

CODE	DESCRIPTION
440-CABLE	Communication Cable and Software (RS232)
440-CABLE-USB	Communication Cable and Software (USB)
440-DIN35	35 mm DIN rail mounting clip

© Copyright 2006 Pyromation, Inc., All Rights Reserved.

Resistance Thermometer Input (RTD)

TYPE	MEASUREMENT RANGE	MINIMUM RANGE
Pt100 (α = 0.003 85 °C^{-1})	(-200 to 650) °C [-328 to 1202] °F	10 °C [18 °F]
Connection Type	2 or 3 wire connection cable resistance compensation possible in the 2 wire system (0 to 20)	
Sensor cable resistance	maximum 11 per cable	
Sensor current	≤ 0.6 mA	

Output (Analog)

Output signal	(4 to 20) mA or (20 to 4) mA
Transmission as	Temperature linear
Maximum load	($V_{power\ supply}$ - 10 V) / 0.023 A (current output)
Digital filter 1st degree	(0 to 8) s
Induced current required	≤ 3.5 mA
Current limit	≤ 23 mA
Switch on delay	4 s (during power 1_a = 3.8 mA)
Electronic response time	1 s

Failure Mode

Undershooting measurement range	Decrease to 3.8 mA
Exceeding measurement range	Increase to 20.5 mA
Sensor breakage/short circuit	≤ 3.6 mA or ≥ 21.0 mA

Electronic Connection

Power supply	U_b = (10 to 30) V dc, polarity protected
Allowable ripple	U_{ss} ≤ 5 V at U_b ≥ 13 V, f_{max} = 1 kHz

Resistance Thermometer Accuracy (RTD)

TYPE	MEASUREMENT ACCURACY
Pt100	0.2 °C or 0.08% [1]
Reference conditions	Calibration temperature (23 ± 5) °C [73 ± 9] °F

General Accuracy

Influence of power supply	± 0.01%/V deviation from 24 V [2]
Load influence	± 0.02%/100 [2]
Temperature drift	T_d= ± (15 ppm/°C × (range end value + 200) + 50 ppm/°C × measurement range) × $\Delta\vartheta$ $\Delta\vartheta$ = deviation of the ambient temperature according to the reference condition
Long term stability	≤ 0.1 °C/year [3] or ≤ 0.05%/year [1][3]

[1] % is related to the adjusted measurement range (the value to be applied is the greater)
[2] All data is related to a measurement end value of 20 mA
[3] Under reference conditions

© Copyright 2006 Pyromation, Inc., All Rights Reserved.

Environmental Conditions

Ambient temperature	(-40 to 85) °C [-40 to 185] °F
Storage temperature	(-40 to 100) °C [-40 to 212] °F
Climatic class	EN 60 654-1, Class C
Condensation	Permitted
Shock resistance	4 g / (2 to 150) Hz according to IEC 60 068-2-6
EMC immunity	Interference immunity and interference emission according to EN 61 326-1 (1EC 1326)

Mechanical Construction

Dimensions	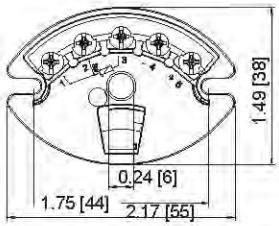 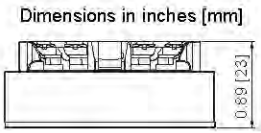
Weight	Approximately 44 g
Materials	Housing: Polycarbonate • Potting: Polyurethane
Terminals	15 AWG (maximum)

Terminal Connections

Power supply and current output

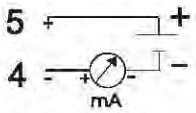

(10 to 30) V dc
(4 to 20) mA

2-Wire

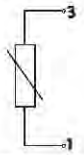

3-Wire

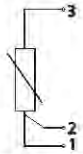

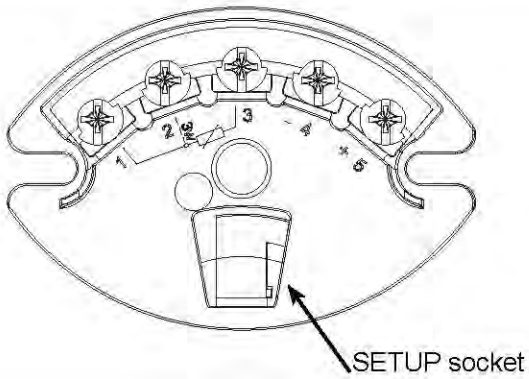

Approvals

CE marked	Unit complies with the legal requirements set forth by the EU regulations.
c UL us	UL Recognized Component
	General Purpose and non-incendive for use in hazardous locations Class I, Division 2 Groups A, B, C and D

© Copyright 2006 Pyromation, Inc., All Rights Reserved.

Product Level Control

Product Level Control manufactures our own line of treatment sensors, custom-equipped for optimal on-site performance. By offering flexible product designs with a wide range of available options, we meet your individual project goals for the best possible value.

FEATURES

- Constructed to meet client specifications
- Easily changed between Normally Open (NO) and Normally Closed (NC) — simply remove the E-clip and invert the float
- Various materials of construction allow for chemical resistance to contaminants
- Delivered fully assembled
- 1-year warranty

ELECTRICAL SPECIFICATIONS

- *Maximum contact ratings:*
  0.080 Amp, 120V, 60 Hz Resistive
  0.040 Amp, 240V, 60 Hz Resistive
  3.36 VA, 240V, 60 Hz Pilot Study
  1 Amp Max @ 24 VDC Resistive
- *Single pole, single throw switch (SPST)*
- *18/2 stranded copper conductors*

MECHANICAL SPECIFICATIONS

- *Maximum pressure rating of 100 PSI @ 20°C*
- *Maximum temperature rating of 100°C*
- *Minimum specific gravity rating of 0.8*
- *Operable at angles up to 30° from vertical*
- *Length equals 6.5"*
- *Diameter equals 0.5"*

PROCESS OF OPERATION

Operating as a vertically-orientated level switch, a single float unit is used with a total fluid system to detect the presence of liquid in a recovery well or tank. When liquid is present, the float rises. Simply secure the sensor in a well or tank by restraining the power cord.

PLC PERSONALIZED ORDERING NUMBER

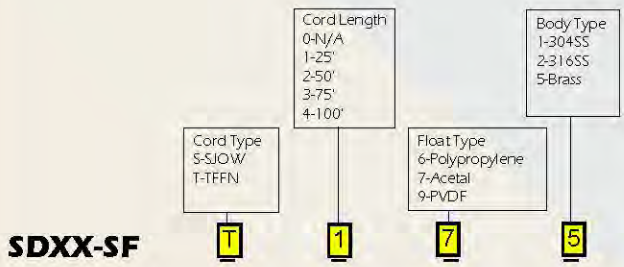

QMARK
A Marley Engineered Products Brand

SUBMITTAL SHEET
IUH SERIES
INDUSTRIAL UNIT HEATERS

IUH SERIES - INDUSTRIAL UNIT HEATERS

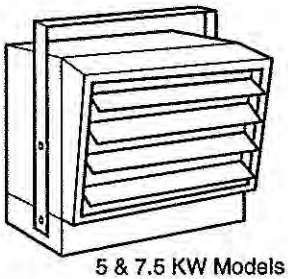

5 & 7.5 KW Models

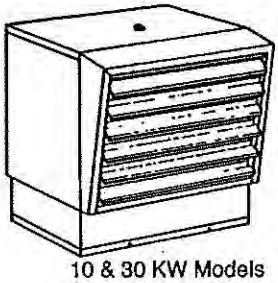

10 & 30 KW Models

c UL us
File # E21609

CAPACITIES
5, 7.5, 10 15 KW 208, 240, 480, 600V
1Ø or 3Ø 20, 25, 30 KW 480 or 600V 3Ø

JOB NAME: _____

LOCATION: _____

ARCHITECT: _____

ENGINEER: _____

CONTRACTOR: _____

SUBMITTED BY: _____

DATE: _____

ITEM	QTY.	CATALOG NUMBER	TAG	HEATER KW	HEATER VOLTS	HEATER Ø	AMPS	CONTROL CKT. MOTOR VOLTS	MOTOR VOLTS	AIR FLOW CFM	AIR FLOW F RISE	THROW	BUILT-IN CNTRL.

ACCESSORIES AND CONTROLS

TAG	QTY.	CAT. NO.	DESCRIPTION

SUBMITTED BY:	DATE

APPROVED BY:	DATE

IUH SERIES

QMARK®
A Marley Engineered Products Brand
470 Beauty Spot Rd. E, Bennettsville, SC 29512
visit www.qmarkmep.com for more info

DIMENSIONS

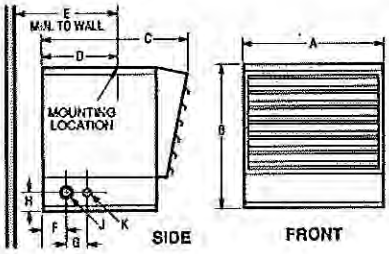

KW SIZE	A	B	C	D	E	F	G	H	J	K
5-7.5	14"	12 1/2"	12 3/8"	5 1/2"	13"	1 3/4"	1 3/8"	1 1/2"	(2) 1/2", 3/4"	1/2"
10-20	18"	18"	17 1/2"	9 13/32"	*	2"	2 1/2"	2 1/2"	(2) 3/4", 1"	(3) 1", 1 1/4", 1 1/2"
25-30	26"	24"	23 1/8"	9 13/32"	20"	2"	2 1/2"	2 1/2"	(2) 1", 1 1/2"	(3) 1", 1 1/2", 2"

*13" for 10-15 KW units; 16" for 20 KW unit.

CONTROLS & ACCESSORIES

CATALOG NUMBER	DESCRIPTION
IUH-CWB-1	Combination wall/ceiling bracket for 5KW thru 15KW units.
IUH-CWB-2	Same as above but for 20KW thru 30KW units.
IUH-TA-1	Single pole thermostat kit (60-120°F temp. range) for field installation in all units.
IUH-TA-2	Double pole thermostat kit (60-120°F temp. range) for use with IUH-520 and IUH-521, 3ø.
IUH-DS-30	3-pole power disconnect switch kit for field installation on all horizontal unit heaters rated 30 amps. or less.
IUH-DS-63	3-pole power disconnect switch kit for field installation on all horizontal unit heaters 10KW and above rated at 30 to 63 amps.
IUH-SW	Summer/Winter fan switch kit for field installation, built-in or remote for all units. Provides summer fan operation.

SELECTION CHART

CATALOG NUMBER	KW. CAP.	BTU/HR.	HTR. VOLT	PHASE	THREADED ROD SIZE	HEATER AMPS 1Ø	HEATER AMPS 3Ø	FAN MTR. HP OR WATTS	CONT. CKT. & FAN MOTOR VOLTAGE	FAN MOTOR RPM	AIR VOL. CFM	AIR TEMP. RISE	THROW	MAX MTG. HT.	WT. (Lbs.)
IUH-520 IUH-524 IUH-548 IUH-560	5	17.0	208 240 480 600	1-3 1-3 1-3 3	1/2"-13 NC	24.0 20.8 10.4 –	13.8 12.0 6.0 4.8	6.0W	208 240 240 240	1400	270	60°F	16'	8'	25
IUH-724 IUH-748 IUH-760	7.5	25.6	240 480 600	1-3 1-3 3	1/2"-13 NC	31.3 15.6 –	18.1 9.0 7.2	6.0W	240 240 240	1400	270	85°F	18'	8'	26
IUH-1024 IUH-1048 IUH-1060	10	34.1	240 480 600	1-3 1-3 3	1/2"-13 NC	43.3 21.6 –	25.7 12.8 9.6	1/10 HP	240 240 240	1550	500	63°F	20'	9'	60
IUH-1524 IUH-1548 IUH-1560	15	51.2	240 480 600	1-3 1-3 3	1/2"-13 NC	64.1 32.1 –	37.7 18.8 14.5	1/10 HP	240 240 240	1550	750	63°F	28'	11'	66 76 78
IUH-2048 IUH-2060	20	68.2	480 600	1-3 3	1/2"-13 NC	42.5 –	24.8 19.3	1/10 HP	240	1550	1000	63°F	32'	13'	76 78
IUH-2548 IUH-2560	25	85.2	480 600	3 3	1/2"-13 NC	– –	31.1 24.0	1/3 HP	240	1550	1300	61°F	34'	14'	134 140
IUH-3048 IUH-3060	30	102.2	480 600	3 3	1/2"-13 NC	– –	36.9 28.9	1/3 HP	240	1550	1800	53°F	38'	15'	140

ARCHITECT'S AND ENGINEER'S SPECIFICATIONS*

Furnish and install where indicated on plans, electric unit heaters suitable for small and large areas and UL and CUL listed for wall or ceiling mounting.

The cabinet shall be made of 18 gauge cold rolled steel, welded, and phosphate coated to resist corrosion. Side, front, and back panels shall be removable without dismounting the heater by removing four screws from inside the control compartment, thus permitting full access to the elements and fan motor areas. Individual adjustable louvers with 30 degree downward stops shall be furnished to provide desired control of discharge air. The control compartment shall be located at the bottom of the cabinet and provided with a swing down hinged cover to permit full access for cleaning and servicing without dismounting the heater. All heater and control wiring shall terminate inside the control compartment. The heater shall be provided with combination wall/ceiling bracket for 5.0 KW and 7.5 KW units and shall have capability of full horizontal and vertical positions. The cabinet shall be finished in a neutral grey epoxy paint.

The heating elements shall be of the non-glowing design consisting of 80/20 nickel-chromium resistance wire, embedded in magnesium oxide and enclosed in a metal sheath to which metal plated fins are copper brazed. The elements shall be painted with aluminized paint for corrosion resistance and cover the entire discharge area for uniform heating. The heating elements shall be warranted for five years.

The fan motor shall be totally enclosed, permanently lubricated, impedance protected, and of unit bearing design suitable for horizontal or vertical operation with high starting and running torques. (5.0 & 7.5 KW units) The fan motor shall be totally enclosed, permanently lubricated, thermal protected, and of double bearing design with high starting and running torques. (10 - 30 KW units) The fan blade shall be aluminum and directly connected to the fan motor, designed specifically for unit heater application.

The fan control shall be of the bimetallic snap-action type and shall activate fan motor after heating elements reach operating temperature and continue to operate the fan motor after thermostat is satisfied and until the heating elements cool.

A thermal cutout shall be built into the system to automatically shut off the heater in the event of overheating and reactivate when temperature returns to normal.

The heater shall be provided with a factory installed, heavy duty, 3-pole contactor providing quiet, efficient operation, making external contacts and additional wiring unnecessary.

Optional controls and accessories:

a. Single pole built-in thermostat
b. Three pole built-in disconnect switch (30 amp rated)
c. Three pole built-in disconnect switch (63 amp rated)
d. Summer/Winter built-in fan switch
e. Combination wall/ceiling bracket

Heaters shall be IUH Series as manufactured by QMark, a division of Marley Engineered Products, Bennettsville, SC.

* Marley Engineered Products reserves the right to change specifications without prior notice.

Remote Use Thermostat

Line Voltage Ventilation Control, Heating or Cooling, Switch Type SPDT, Control Range 0 to 120 F, Differential 3 F, Height 6 3/8 In, Width 3 1/16 In, Depth 2 3/8 In, Ambient Temp Range to 140 F, Inductive Amps @120V 16, @208V 13.2, @240V 12, Contact Rating Resistive 120/208/240V 25, Bulb Size (In) 5/16 X 2 5/16, Capillary Length 5 Ft, Accuracy +/- 3 Degrees F, Pilot Duty Rating 125 VA, Standards UL, CSA, NEC 547, Includes Rain Tight NEMA 4X Enclosure

Grainger Item #	4MY93
Brand	SUNNE
Mfr. Model #	TRF115-005
Ship Weight (lbs.)	0.7

DAYTON Exhaust Fan, 18 In, 115 V, Single Speed

Exhaust Fan, Direct Drive, Shutter Mounted, Single Speed, Propeller Dia 18 In, CFM @ 0.000-In SP 2590, @ 0.125-In SP 2190, @ 0.250-In SP 1705, Sones @ 0.000-In. SP @ 5 Ft. 14.3, Voltage 115, 60 Hz, Single Phase, Full Load Amps 4.5, HP 1/4, Max Ambient Temp 104 F, Motor Type Shaded Pole, Bearing Type Ball, Height 21 1/8 In, Width 21 1/8 In, Max Depth 18 1/4 In, Sq Opening Required 19 In, Propeller Material Stamped Aluminum, Guard Material Steel, Includes Automatic Shutter

Grainger Item #	1HLA5
Brand	DAYTON
Mfr. Model #	1HLA5
Ship Qty.	1
Sell Qty. (Will-Call)	1
Ship Weight (lbs.)	30.0
Availability	**Ready to Ship**
Catalog Page No.	4257
Country of Origin (Country of Origin is subject to change.)	USA

Qty.

Enlarge Image

Add Grainger TripleGuard® repair & replacement coverage for $89.95 each.

Add to Order | Add to Personal List | Compare Alternates

Price shown may not reflect your price. Sign in or register.

When can I get it? Use your ZIP code to estimate availability.

Qty: ZIP code: 55337 Go

Tech Specs | Additional Information | Compliance & Restrictions | MSDS | Required Accessories | Optional Accessories | Alternate Products | Repair Parts

Item	Exhaust Fan
Type	Direct Drive, Shutter Mounted, Single Speed
Propeller Dia. (In.)	18
CFM @ 0.000-In. SP	2590
CFM @ 0.125-In. SP	2190
CFM @ 0.250-In. SP	1705
Sones @ 0.000-In. SP @ 5 Ft.	14.3
Motor RPM	1725
Voltage	115
Hz	60
Phase	1
Full Load Amps	4.5
HP	1/4
Max. Ambient Temp. (F)	104
Motor Type	Shaded Pole
Motor Enclosure	Totally Enclosed Air-Over
Motor Insulation	Class A
Bearing Type	Ball
Height (In.)	21-1/8
Width (In.)	21-1/8
Max. Depth (In.)	18-1/4
Sq. Opening Required (In.)	19
Frame Material	Cold Rolled Steel
Frame Finish	White Polyester
Propeller Material	Stamped Aluminum
Guard Material	Steel
Wire Guard Finish	Gray Polyester
Number of Blades	3
Thermal Protection	Auto
Agency Compliance	UL Listed for US and Canada
Includes	Automatic Shutter

XNX™ Universal Transmitter

Honeywell

A universal transmitter for toxic, oxygen and combustible gas detection compatible with all Honeywell gas sensing technologies

XNX Universal Transmitter

Universal Gas Sensing Platform

High performance
- Flammable gas detection 0 to 100% LFL/LEL
- Point IR with heated optics provides immunity to poisoning and no hidden faults
- Open-path IR flammable gas detection in LEL-m measurement
- Electrochemical cell offers toxic gas detection in ppm
- IR cell provides CO_2 and combustible gas monitoring
- Robust and reliable operation in explosive areas and harsh environments

Flexible Operation
- 3 versions - supports mV (Catalytic Bead and IR Cell), Electrochemical Cell and IR (point and open-path) gas detection
- Multi-Purpose Detector (MPD) with field serviceable mV, Catalytic bead and IR Cell capability
- 4-20mA with HART® as standard
- Multiple communications options include up to 3 relays, MODBUS® and FOUNDATION® H1 Fieldbus (pending)
- Optional local IS port for handheld HART configurator

Easy to Use
- Large, backlit, easy-to-view LCD display offers multi-sensory indicators (visual icons, colored buttons, text, etc.) to display gas and sensor readings
- User interface supported by 8 selectable languages (English, Spanish, German, Italian, Portuguese, French, Russian, Chinese)
- Self-test and fault indication features
- Non-intrusive, one-man operation
- Quick calibration with auto-inhibit

Easy to Install
- 3 or 4 wire operation, source, sink or isolated
- Use with conduit or cable installations
- Simple plug-in sensors and replaceable cells
- NEMA 4X IP66 rated for rugged indoor/outdoor use

Cost Effective
- Minimal training required
- One-man operation
- Plug-in sensor replacement
- All necessary accessories included

Applications
- Offshore Oil & Gas production platforms
- Onshore Oil terminals
- Refineries
- Gas Transmission
- Gas Distribution
- LNG terminals
- Gas storage terminals
- Chemical plants
- Petrochemical plants
- Solvent recovery operations

The XNX Universal Transmitter marks a new turn in gas detection from Honeywell Analytics. It supports the widest range of sensors on a common platform and offers a modular choice of inputs and outputs.

Bringing together the best solutions in gas detection

Electrochemical
- Proven electrochemical sensing technology
- Surecell™ electrochemical cells are ideal for hot and humid environments
- Long life sensing cells (typical >2 years)
- Patented 'Reflex' sensing element verification diagnostics
- Sensor recognition software auto configures transmitter
- Plug and play factory configured sensors
- Intrinsically safe sensor connection permits hot swap, reducing down time

Catalytic Bead
- Supports Honeywell Analytics 705, 705HT, Sensepoint, Sensepoint HT and MPD sensors
- Fast response to wide range of hydrocarbons and flammables

Infrared (Open Path IR, Point IR, IR Cell)
- Supports Honeywell Analytics Searchline Excel, Searchpoint Optima Plus
- Failsafe operation
- Fast speed of response
- Reduced routine maintenance
- Immune to catalytic poisons
- Long operating life
- Works in inert atmospheres

XNX is designed for flexible integration, simple installation, user friendly operation and straight-forward maintenance. It is ideal for use with a range of gas monitoring controllers or industry standard PLCs. Users are assured of being protected in all conditions with Honeywell Analytics gas monitoring solutions.

XNX's modular design enables Honeywell Analytics to offer appropriate, cost effective solutions to a wide range of gas detection requirements.

The XNX Universal Transmitter is an excellent choice for those who want a total integrated monitoring and safety solution for an industrial plant.

With the XNX, you are freed from the need to add extra controllers, junction boxes, relays, monitors and other equipment accessories.

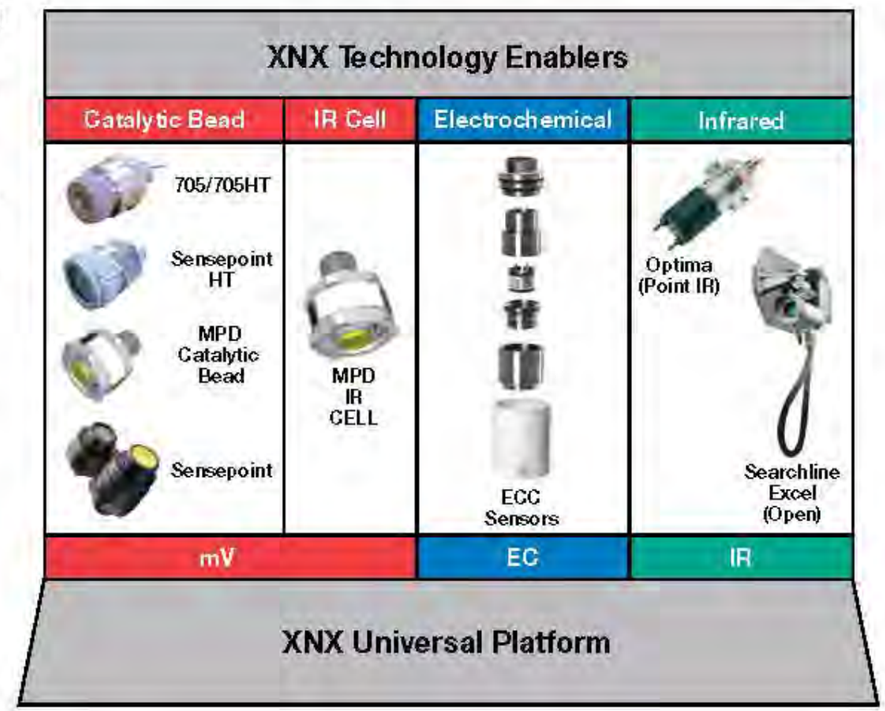

Photos not to scale.

Communications

The XNX's powerful advanced communications module adds increased functionality and flexibility to a gas detection network. Standard HART communications, along with optional Modbus, Foundation Fieldbus (pending) or relays, interface with a PLC and a host of other protocol compatible devices found in industrial applications.

Back-lit, easy-to-read LCD display with icons includes a broad range of language options including English, Spanish, French, Italian, Portuguese, German, Russian and Chinese to meet global requirements.

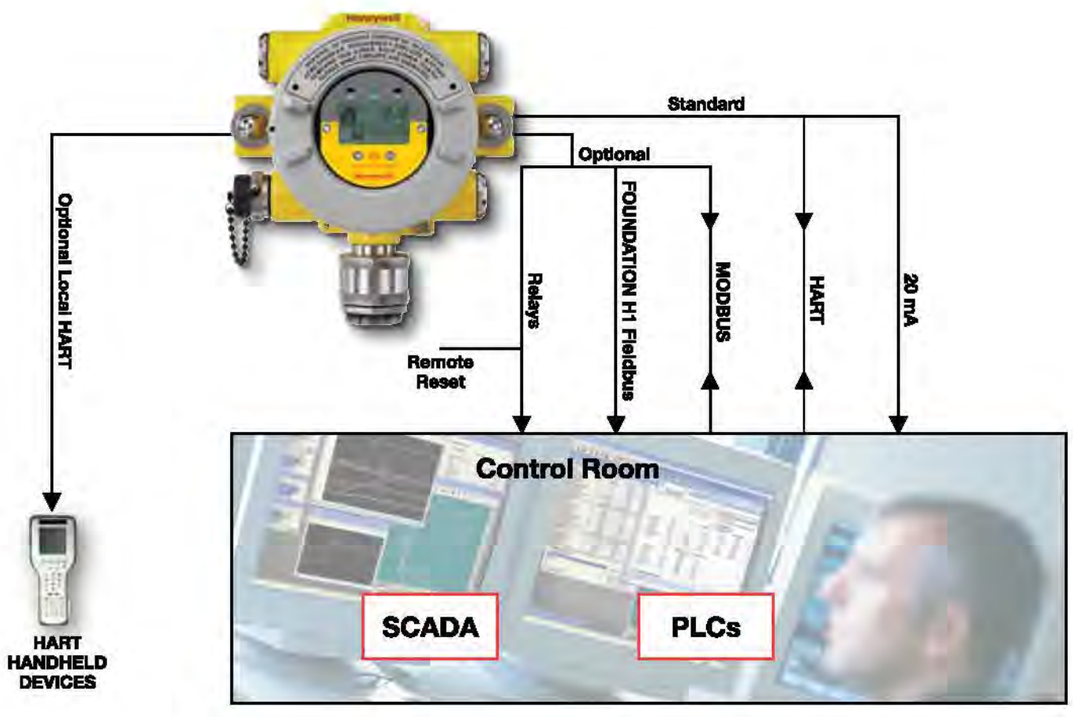

Installation Details

Mechanical

The XNX enclosure is available in a painted stainless steel or aluminum housing with a marine grade coating. Five threaded conduits/cable entries are available in Metric or NPT versions, and ruggedized mounting options provide ultimate installation flexibility. Instrumentation built on various sensing technologies can be attached locally to the transmitter or remotely with the appropriate accessories. Inside, customer and sensor connections to the unit are designed to protect against dangerous electrical misconnections. With pending approvals to UL, CSA and ATEX requirements for Hazardous Locations, and IP66/67 rating to protect against dirt/water ingress, the XNX serves the most demanding industrial environments.

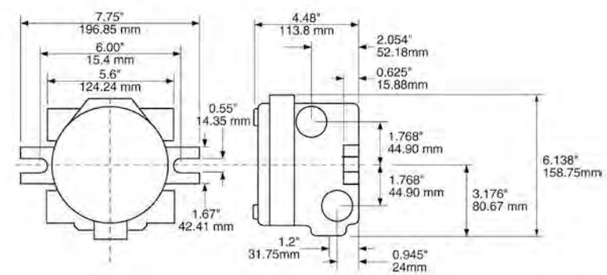

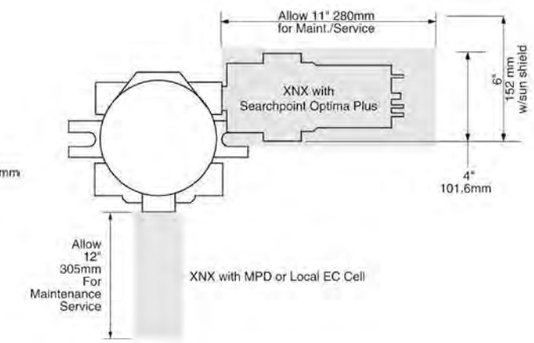

Ordering Information

The XNX part numbering system contains all necessary information to convey the product configuration including options. Agency, Port Thread, Enclosure Material, Sensor Personality define the standard unit. Three option fields are used to define optional Relay or Fieldbus interfaces and factory installed local HART®. To order XNX parts, call 800-538-0363.

XNX-AM ■ ■ - ■ ■ ■ ■ ■

Agency Approval	Port Threads	Enclosure	Sensor	Interface Option	Local HART®	Sensor and Range		
▼	▼	▼	▼	▼	▼	▼	▼	▼
ATEX - **A**	M25 - **M**	Stainless - **S**	Electrochem - **E**	None - **N**	None - **N**	None - **NNN**		
UL / CSA - **U**	3/4" NPT - **T**	Aluminum - **A**	Infrared - **I**	Relay - **R**	Local HART® - **H**	MPD-AM (Catalytic Bead %LEL) - **CB1**		
INMETRO - **B**			milliVolt - **V**	Modbus® - **M**		MPD-AMIF1 (IR %LEL Flam) - **IF1**		
				Foundation™ Fieldbus - **F**		MPD-AMIV1 (IR CH4 0-5% Vol) - **IV1**		
						MPD-AMIC1 (IR CO 0-2% Vol) - **IC1**		

Technical Summary

XNX Transmitter		
Material	LM25 Aluminum, painted (SS316 painted optional)	
Cable Entries	5 conduits/cable entries – (2 right, 2 left, 1 bottom) Available in ¾" NPT, or M25	
Termination	Cage Clamp pluggable Terminal Blocks with retaining screws, 0.5 to 2.5mm (12-28 AWG)	
Mounting	XNX Enclosure Bracket (ears on casting for u-bolt). Integral cast mounting flanges provide secure mounting to surfaces, channels or up to 6" Pipe. Optional Remote sensor (up to 50 ft / 15.2 M) for Cat Bead and Toxic	
User Interface	Standard Custom Backlit LCD. 2.5" High Resolution DOT Matrix Display. Discrete Alarm and Status indication. Reliable Non-Intrusive 4 button interface magnetic wand access. Optional HART Handheld with IS Port	
Signal	Standard HART over 3-wire 4-20mA (sink or source). Optional Modbus over RS-485 and Foundation Fieldbus.	
Environmental		
Temperature	-40°C to +65°C / -40°F to +149°F (sensor dependent)	
Humidity	20 to 90% RH non-condensing	
IP Rating	NEMA 4X IP65	
Options		
	Form C and SPDT 3 Relays, 240 VAC, 5A (2 Alarm, 1 Fault) (Mutually exclusive with Modbus and Fieldbus Options)	
Power		
	18V to 32V (24V nominal)	
Hazardous Area Approvals (Pending)		
	ATEX: Ex II 2 G D, EEx [ia] IIC T5 (Tamb -40°C to +65°C) UL: Class I, Div 1, Groups B, C, and D / Class 1, Zone 1 AEx d IIC T5 (Tamb -40°C to +65°C) CSA: Class I, Div 1, Groups B, C, and D T5 (Tamb -40°C to +65°C)	
Performance Approvals (Pending)	EU – ATEX, EN45544, EN50104, EN50270, EN50271, EN13980, EN60079, EN60079-18, -1, -7, -29-1, EN45544-1, -2 NA – UL 913, UL 1203, CSA 22.2 No. 152 Other – IEC61508 (SIL Assessment, SIL 2), IECEx CD 005	
Display Module & User Interface (Standard)		
Display Type	Backlit LCD	
Information Displayed	Base Information:	Gas Reading Gas Name and Units of measurement Fault and Alarm Status Large Numeric concentration or LEL display Bar graph showing current reading, set points and full scale.
	Fault/Alarm and Operating Status Indication:	Security settings allow multi level operator access for set-up, configuration and calibration Event history stores Time and Date of all Alarm, Diagnostic, Configuration events
Interface	Magnetic wand with terminal screwdriver (supplied each unit)	
4-20mA & HART (Standard Supply)		
Description	Fully configurable isolated 4-20mA & HART output module providing current sink, current source and isolated modes of operation. (supports HART 6.0 protocol)	
Non-intrusive Interface	Optional local IS port to enable HOT connection of a HART handheld configurator	
Operating Modes	Current sink / Current source / Isolated current sink /Conventional or with HART data	
Output Range	0 to 22mA	
4-20mA Signal Accuracy	+/- 1% FS	
Max loop resistance	600 Ohms at 24Vdc loop supply	
Functions Supported Via HART	Gas Reading Gas Name and Units of measurement 4-20mA signal level General/Device Information Installation Configuration Forcing of 4-20mA output	Detailed Sensor Information including: Optical Signal Level Dynamic Reserve (Excel Only) Raw reading 24V supply voltage Temperature	RTC (Excel Only) Calibration and Configuration status Detailed Fault and Warning Information Fault and Alarm History Zero Calibration
Local IS HART Port (Optional)		
Description	Provides externally accessible IS connections to the XNX transmitter to enable HOT connection of HC275/375 HART or equivalent hand held configurator.	
Installation	Fitted to one of the cable entries on the XNX transmitter.	
Environmental Protection	Terminals protected by cover to IP 66 when not in use	

Technical Summary

Relay Module (Optional)		
Description	Provides three fully user configurable relay outputs that can be switched based on the current gas level and/or status of the transmitter. Provides 2 x SPCO alarm and 1 x SPCO fault relays. Single Pole Double Throw SPDT. Option PCB Factory installed in display module.	
Installation	Fitted into housing base either at the factory or in the field by qualified service engineer.	
Rating	Maximum : 240VAC, 5A (non inductive load)	Minimum : 5V, 10mA (non inductive load)
Electrical Connections	Fault: Common, Normally Open, Normally Closed Alarm 1: Common, Normally Open, Normally Closed Alarm 2: Common, Normally Open, Normally Closed	
Configuration	Default	Configurable Options
	Fault Relay: Normally energized Non latching Signal inhibit as fault	Fault Relay: Normally energized / normally de-energized None Enable/disable
	Alarm 1 / 2 Relays: Normally de-energized Non latching Alarm rising on gas reading Alarm level 20% and 40% of scale Hysteresis of 2% of scale	A1 / A2 Relays: Normally energized / de-energized Latching / non latching Alarm on rising / falling Alarm level 10% to 90% of full scale
Re-setting of Latched Relays	Easily accessible interface on display (if used) or via HART interface (local or remote)	
Note	Use of the Relay Module or "Other" Communications Module (E.g. Foundation Fieldbus) is mutually exclusive. However, relay function may be used in conjunction with standard communication output i.e. 4-20mA with HART.	
Relay Specific Functions via HART Interface	Relay status information / Reset of latched conditions / Configuration of relays Forcing of relay state Reset through non intrusive User Interface. Remote Switch closure using Remote Reset input Remotely through HART	
Foundation Fieldbus Module (Optional)		
Description	Foundation Fieldbus compliant digital communications interface enables connection of the XNX transmitter to a multi-drop Foundation Fieldbus H1 network.	
Installation	Fitted into housing base either at the factory or in the field by qualified service engineer.	
Connections	Sig+, Sig- and Screen	
Physical Layer	Conforms to IEC 1158-2 and ISA 50.02, 31.25Kbits/s	
Maximum No. of Nodes	32	
Functions Supported	Gas Reading Gas Name and Units of measurement Instrument status (OK, warning, fault, over-range) General/Device Information Remote zero and span calibration (detector dependent)	Detailed Sensor Information including: Optical Signal Level Dynamic Reserve (Excel Only) Raw reading 24V supply voltage Temperature RTC (Excel Only) Calibration and Configuration status	Detailed Fault and Warning Information: Fault and Alarm History Zero Calibration
Modbus RTU Module (Optional)		
Description	The Modbus output module provides an isolated RS485 output to enable the connection of the XNX transmitter to a multi-drop Modbus network	
Installation	Fitted into housing base either at the factory or in the field by qualified service engineer.	
Connections	RS485+, RS485-, Drain	
Physical Layer	Isolated RS485, 1200 to 19.2K Baud	
Maximum No. of Nodes	254 XNX compatible transmitters only	
Protocol	Modbus RTU	
Functions Supported	As per Foundation Fieldbus Module (Optional) - see above	

Further information is available upon request.

* Foundation Fieldbus not available at time of publication. Please call your Honeywell Analytics sales person.

XNX™ is a registered trademark of Honeywell International.

HART® is a registered trademark of the HART Communication Foundation.

MODBUS® is a registered trademark of Schneider Automation Inc.

Foundation™ is a trademark of Fieldbus Foundation.

Honeywell Analytics Lines of Business

Commercial

Vulcain-brand gas detection from stand-alone units to fully engineered, multi-point systems, all offering cost-effective regulatory compliance

» Applications: parking structures, chillers, mechanical rooms, office towers, commercial buildings, shopping centers, swimming pools, golf courses, schools and universities, laboratories

Industrial

Renowned Sieger and Manning gas detection systems with advanced electrochemical, infrared and open path sensing technologies

» Applications: oil and gas, cold storage, water/wastewater treatment, chemicals, engine rooms, plastics and fibers, agriculture, printing and light industrial

Portables

Single or multi-gas Lumidor and other premium detectors with compact, lightweight designs ranging from simple alarm only units to advanced, fully configurable and serviceable instruments

» Applications: underground utility and electricity ducts, boiler rooms, post-fire sites, sewers, industrial plants, industrial hygiene, first responder teams, remote fleets

High Tech/Government

A complete portfolio of gas and chemical detection instrumentation including infrared spectroscopy (MST) with no cross interference, to Chemcassette paper-based solutions (MDA Scientific) offering detection down to parts per billion

» Applications: semiconductor manufacturing and nanotechnology, aerospace propulsion and safety, specialty chemicals industry, research laboratories, emergency response

Technical Services

24/7 global network includes post-sales service and Systems Integration teams

» Emergency call out, service contracts, on/off-site repair, training and commissioning

» Complete range of spares, consumables and accessories

Find out more

www.honeywellanalytics.com

Contact Honeywell Analytics:

Americas

Honeywell Analytics Inc.
405 Barclay Blvd.
Lincolnshire, IL 60069
USA
Tel: +1 847 955 8200
Toll free: +1 800 538 0363
Fax: +1 847 955 8210
detectgas@honeywell.com

Technical Services

ha.us.service@honeywell.com

www.honeywell.com

Europe, Middle East, Africa

Life Safety Distribution AG
Wilstrasse 11-U31
CH-8610 Uster
Switzerland
Tel: +41 (0)44 943 4300
Fax: +41 (0)44 943 4398
gasdetection@honeywell.com

Asia Pacific

Honeywell Analytics Asia Pacific
#508, Kolon Science Valley (I)
187-10 Guro-Dong, Guro-Gu
Seoul, 152-050
Korea
Tel: +82 (0)2 2025 0307
Fax: +82 (0)2 2025 0329
analytics.ap@honeywell.com

Please Note
While every effort has been made to ensure accuracy in this publication, no responsibility can be accepted for errors or omissions. Data may change, as well as legislation, and you are strongly advised to obtain copies of the most recently issued regulations, standards, and guidelines. This publication is not intended to form the basis of a contract.

Honeywell

HWA6181

H_KNX_DS01071_V1 0/08

© 2008 Honeywell Analytics

Model TA-2100 smarter PID VOC Gas Detector

Part No. 01-26114

Options

- Modbus RTU
- Relay Module
- Sensor Cable
- Sample Pump
- Duct Mount Kit
- Dust Guard
- Splash Guard
- Wireless Module
- 110/220 VAC
- Calibration Kits
- 316 SS Enclosure

Features

no false alarms PID Photo-Ionization sensor technology

Self-Calibration adjusts monthly based on sensor life curve

Auto-Gas Calibration, non-intrusive, hands-free, magnetic switches

Not affected by temperature -20˚C to +55˚C, stable by design

LCD display - 12 characters x 2 lines - provides user interface with magnetic switches - no dip switches - LED alarm indicators

Offsite sensor calibration with memory chip embedded in sensor

Peak Value, 15-min. TWA, Remaining Sensor Life, Replace Sensor indication and number of days since last gas calibration

Optional Relay Module; low, mid, high and fault conditions

Optional RS-485 Modbus RTU Network interface

Advanced diagnostics - continuous on-board systems monitoring

Specifications

Detection Principle:	PID Photo-Ionization
Detection Method:	Diffusion or Sample Drawing
Detection Range:	0 - 200 ppm (parts-per-million)
Calibration Method:	Non-intrusive, magnetic tool
Operating Voltage:	12 - 30 VDC, 24 VDC nominal
Power Requirements:	1.82 W @ 24 VDC
Electrical Connections:	Power (24 VDC) and Signal (4-20mA)
Cable Requirements:	3 or 4 wires, shielded
Optional Connections:	RS-485 Half-duplex (Modbus RTU)
Resolution:	1 ppm minimum detection level
Zero Drift:	less than 1% of full-scale
Temperature Range:	-20˚C to +55˚C
Humidity Range:	5 - 95% RH, non-condensing
Response Time:	<30 sec. to 90% of final reading
Recovery Time:	<30 sec. to 90% recovery
Sensor Service Life:	>18 mos. typical; normal conditions
Electronic Enclosure:	Ex-Proof, alum. or 316 SS, Nema 4x
Enclosure Certifications:	CSA/UL/FM Class I GR B,C,D

Applications

Chemical Processing

Degreasing

Cleaning Solvents

Disinfectants

Laboratories

Paints & Varnishes

Pesticides

Industrial Emisssions

Specifications subject to change without notice due to continued program of product innovation.

Hach sc200™ Universal Controller

Product Overview

One Controller for the Broadest Range of Sensors

The sc200 Universal Controller is the most versatile controller on the market. The new sc200 controller is the only controller that allows the use of digital and analog sensors, either alone or in combination, to provide compatibility with the broadest range of sensors. It replaces the Hach sc100 digital and GLI53 analog controllers with advanced features for easier operator use.

The sc200 controller platform can be configured to operate either 2 Digital Sensor Inputs, or 1 or 2 Analog Sensor Inputs, or a combination of Digital and Analog Sensor Inputs. Customers may choose their communication options from a variety of offerings including MODBUS RTU, Profibus DPV1, and HART.

Choose from up to 29 digital or analog sensors for up to 15 different parameters.

Features and Benefits

Maximum Versatility

- *Standardized controller eliminates the need for a variety of dedicated controllers*
- *Multi-channel controller operates either 1 or 2 sensors reducing inventory holding costs and providing an inexpensive option to add a second sensor at a later time*
- *"Plug and Play" operation with all Hach digital sensors*
- *True dual sensor controller provides 4-20 mA outputs to transmit primary and secondary measurement values*

Ease of Use and Confidence in Results

- *New display and guided calibration procedures reduce operator error*
- *Password protected SD card reader offers a simple solution for data download and transfer, and sc200 and digital sensor configuration file duplication and backup*
- *Visual warning system provides critical alerts*

Communication Options

- *MODBUS RS232/RS485, Profibus DPV1, or HART*

Controller Configuration	Functionality
2 Channel Digital Controller	Maximum versatility and flexibility: • Plug and play with all Hach digital sensors • Mix and match with Hach digital and GLI analog sensors
2 Channel Controller with 1 Analog and 1 Digital Sensor Input	• Plug and play with any one Hach digital sensor • Mix and match with any one GLI analog sensor
1 or 2 Channel Analog Controller	• Mix and match up to two GLI analog sensors

Controller Comparison

Features	Previous Models sc100™ Controller	Previous Models GLI53 Controller	NEW! sc200™ Controller	Benefits
Display	64 x 128 pixels 33 x 66 mm (1.3 x 2.6 in.)	64 x 128 pixels 33 x 66 mm (1.3 x 2.6 in.)	160 x 240 pixels 48 x 68 mm (1.89 x 2.67 in.) Transreflective	• Improved user interface—50% bigger • Easier to read in daylight and sunlight
Data Management	irDA Port/PDA Service Cable	N/A	SD Card Service Cable	• Simplifies data transfer • Standardized accessories/max compatibility
Sensor Inputs	2 Max Direct Digital Analog via External Gateway	2 Max Analog Depending on Parameter	2 Max Digital and/or Analog with Sensor Card	• Simplifies analog sensor connections • Works with GLI and Hach's digital sensors
Analog Inputs	N/A	N/A	1 Analog Input Signal Analog 4-20mA Card	• Enables non-sc analyzer monitoring • Accepts mA signals from other analyzers for local display • Consolidates analog mA signals to a digital output
4-20 mA Outputs	2 Standard	2 Standard	2 Standard Optional 3 Additional	• Total of five (5) 4-20 mA outputs allows multiple mA outputs per sensor input
Digital Communication	MODBUS RS232/RS485 Profibus DP V1.0	HART	MODBUS RS232/RS485 Profibus DP V1.0 HART 7.2	• Unprecedented combination of sensor breadth and digital communication options

To complete your measurement system, choose from Hach's portfolio of controller and sensor products...

Choose from Hach's Broad Range of Digital and Analog Sensors

Parameter	Sensor	Digital or Analog
Ammonia	AMTAX™ sc, NH4D sc	●
Chlorine	CLF10 sc, CLT10 sc, 9184 sc	●
Chlorine Dioxide	9185 sc	●
Conductivity	3400, 3700	△
Dissolved Oxygen	LDO™, 5740 sc	●
Dissolved Oxygen	5500	△
Flow	U53, F53 Sensors	△
Nitrate	NITRATAX™ sc, NO3D sc	●
Oil in Water	FP360 sc	●
Organics	UVAS sc	●
Ozone	9187 sc	●
pH/ORP	pHD	●
pH/ORP	pHD, pH Combination, LCP	△
Phosphate	PHOSPHAX™ sc	●
Sludge Level	SONATAX™ sc	●
Suspended Solids	SOLITAX™ sc, TSS sc	●
Turbidity	1720E, FT660 sc, SS7 sc, ULTRATURB sc, SOLITAX sc	●

● = Digital △ = Analog

The diagrams below demonstrate the versatility and flexibility for the base controller units. Connect any of the appropriate sensors listed above to meet your measurement needs. Operation of analog sensors require the controller to be equipped with the appropriate sensor card.

2 Channel Digital Controller Configurations

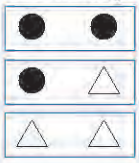

2 Channel Controller with 1 Analog and 1 Digital Sensor Input Configurations

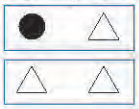

2 Channel Analog Controller Configurations

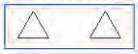

Engineering Specifications

1. The controller shall be a microprocessor based instrument.
2. The enclosure shall be 1/2 DIN format, NEMA4X rated for wall, pole and panel mounting.
3. The controller shall be available in either 100–240 Vac 50/60 Hz or 24 Vdc power supply versions.
4. The controller shall offer two analog 0/4-20 mA output signals with independent PID control functions and optional additional 4-20 mA outputs.
5. The controller shall accept either Digital Sensors or Sensor Modules for analog pH, Conductivity, DO, Paddle Wheel Flow, and Ultra Sonic Flow sensors.
6. The controller shall have single channel and dual channel options.
7. The controller shall have options for MODBUS RS232, MODBUS RS485, Profibus DPV1, and HART 7.2 communication.
8. The display contrast shall be adjustable.
9. The Menu shall be available in at least 19 different languages.
10. The controller shall have 2 Data logs, 128 kb each. The logged data shall be downloadable on a SD card in XML format.
11. The controller shall be Hach Company sc200 Universal Controller.

Specifications*

sc200 General Specifications

Display
Graphic dot matrix LCD with LED backlighting
Transreflective

Display Size
48 x 68 mm (1.89 x 2.67 in.)

Display Resolution
240 x 160 pixels

Height x Width x Depth
144 x 144 x 181 mm (5.7 x 5.7 x 7.1 in.)

Weight
1.70 kg (3.75 lb)

Power Requirements
100 – 240 Vac ±10%, 50/60 Hz
24 Vdc -15% + 20%

Operating Temperature
-20 to 60°C (-4 to 140°F), 0 to 95% RH non-condensing

Storage Temperature
-20 to 70°C (-4 to 158°F), 0 to 95% RH non-condensing

Analog Output Signal
Two 0/4-20 mA isolated current outputs, max 500Ω

Operational Mode
Primary or secondary measurement or calculated value (dual channel only)

Functional Mode
Linear, Logarithmic, Bi-linear, PID

Optional 3 additional 4-20 mA isolated current outputs, max 500Ω @ 18-24 Vdc loop-powered or max 350Ω @ 15 Vdc (self-powered)

Security Levels
Two password protected levels

Enclosure Materials
Polycarbonate, Aluminum (powder coated), Stainless Steel

Mounting Configurations
Wall, pole and panel mounting

Enclosure Rating
NEMA4X / IP66

Conduit Openings
1/2" NPT Conduit

Relays
Four electromechanical SPDT (Form C) contacts, 1200W, 5 A, 250 Vac

Operational Mode
Primary or secondary measurement, calculated value (dual channel only) or timer

Functional Mode
Alarm, Timer, Feeder Control, PWM or FM Control, System Alarm

Digital Communication
MODBUS RS232/RS485, Profibus DPV1, or HART 7.2 optional

Memory Backup
Flash memory

Electrical Certifications
EMC
CE compliant for conducted and radiated emissions:
- CISPR 11 (Class A limits)
- EMC Immunity EN 61326-1 (Industrial limits)

Safety
cETLus safety mark for:
- General Locations per ANSI/UL 61010-1 & CAN/CSA C22.2. No. 61010-1
- Hazardous Location Class I, Division 2, Groups A,B,C & D (Zone 2, Group IIC) per FM 3600 / FM 3611 & CSA C22.2 No. 213 M1987 with approved options and appropriately rated Class I, Division 2 or Zone 2 sensors

OR
cULus safety mark (for Indoor Use Only)
- General Locations per UL 61010-1 & CAN/CSA C22.2. No. 61010-1

Warranty
2 years

sc200 for Hach Analog pH/ORP Sensors

Measuring Range
-2.0 to 14.0 pH or -2.00 to 14.00 pH
-2,100 to 2,100 mV

Repeatability
±0.1% of range

Response Time
0.5 s

Temperature Range
PT100/PT1000: -20 to 200°C (-4 to 392°F)
NTC300: -20 to 110°C (-4 to 230°F)
Manual: -25 to 400°C (-13 to 752°F)

Temperature Accuracy
±0.5°C (0.9°F)

Temperature Drift
±0.03% of reading /°C

Temperature Compensation
Automatic from -20 to 110°C (-4 to 230°F) or manual

Temperature Sensors
PT100/PT1000/NTC300

Temperature Compensation Curves
Nernst, for Pure Water: Ammonia, Morpholine, User Defined (linear)

Sensor-to-Controller Distance (maximum)
pHD or LCP sensor: 914 m (3000 ft.)
pH Combination electrode w/ preamplifier: 300 m (958 ft.)
pH Combination electrode w/o preamplifier: 30 m (100 ft.), depending on environment this distance is shorter

Calibration Methods
2-point buffer (pH only)
1-point buffer (pH only)
2-point sample (pH only)
1-point sample (pH or ORP)

Specifications *continued*

sc200 for Hach Analog Contacting Conductivity Sensors

Measuring Range
Conductivity
µS/cm: 0-2.000, 0-20.00, 0-200.0 or 0-2,000
mS/cm: 0-2.000, 0-20.00 or 0-200.0

Resistivity
0-19.99 MΩ•cm or 0-999.9 kΩ•cm

TDS
0-9999 ppm or 0-9999 ppb

Repeatability, Precision (0-20 µS/cm, K=1)
±0.02 mS/cm

Repeatability (20-200,000 µS/cm, K=1)
±0.1% of reading

Response Time
0.5 s

Temperature Range
-20 to 200°C (-4 to 392°F)

Temperature Accuracy
±0.5°C (0.9°F)

Temperature Drift
> 20 µS/cm: ±0.02% of reading / °C
< 20 µS/cm: ±0.004 µS/cm

Temperature Compensation
Automatic from -20 to 200°C (-4 to 392°F) or manual

Temperature Sensor
PT100/PT1000

Temperature Compensation Curves
Linear, Ammonia, Natural water, User Defined, none

Sensor-to-Controller Distance (max)
91m (300 ft.)

Calibration Methods
Zero
GLI DRY-CAL
1-point sample

sc200 for Hach Analog Inductive Conductivity Sensors

Measuring Range
Conductivity
µS/cm: 0-200.0 or 0-2,000
mS/cm: 0-2.000, 0-20.00, 0-200.0 or 0-2,000
S/cm: 0-2.000

% Concentration
0-99.99% or 0-200.0%

TDS
0-9999 ppm repeatability

Repeatability > 500 µS/cm
±0.5% of reading

Repeatability < 500 µS/cm
±2.5 µS/cm

Response Time
1 s

Temperature Range
-20 to 200°C (-4 to 392°F)

Temperature Accuracy
±0.5°C (0.9°F)

Temperature Drift
> 500 µS/cm: ±0.02% of reading / °C
< 500 µS/cm: ±0.1 µS/cm

Temperature Compensation
Automatic from -20 to 200°C (-4 to 392°F) or manual

Temperature Sensors
PT1000

Temperature Compensation Curves
Linear, Natural water, User Defined, none**

Concentration Curves
H_3PO_4: 0-40%; HCl: 0-18%; HCl: 22-36%; NaOH: 0-16%; $CaCl_2$: 0-22%; HNO_3: 0-28%; HNO_3: 36-96%; H_2SO_4: 0-30%; H_2SO_4: 40-80%

Sensor-to-Controller Distance

Full-scale value	*Maximum length*
200 to 2,000 µS/cm	61m (200 ft.)
2,000–2,000,000 µS/cm	91m (300 ft.)

Calibration Methods
1-point Cond (or Concentration or TDS)
Zero

***Available curves depend on the selected type of measurement (Conductivity, Concentration or TDS).*

Continued on next page.

Specifications *continued*

Linearity 3700 Inductive Conductivity Sensors

1.5 mS/cm – 2 S/cm
1% or reading

< 1.5 mS/cm
±15 µS/cm

Linearity 3700 Inductive Conductivity Sensors with Multiple Point Calibration

1.5 mS/cm – 2 S/cm
0.5% or reading

< 1.5 mS/cm
±5 µS/cm

sc200 for Hach Analog Dissolved Oxygen Sensors

Measuring Range
0 to 40 ppm
200% saturation

Repeatability
±0.05% of range

Response Time
0.5 s

Temperature Range
0 to 50°C (32 to 122°F)

Temperature Accuracy
±0.5°C (0.9°F)

Temperature Drift
±0.02% of reading / °C

Temperature Compensation
Automatic from 0 to 40 ppm or manual

Temperature Sensor
NTC30K / Manual

Sensor-to-Controller Distance (max)
305 m (1000 ft.)

Calibration Methods
Sample
Air
Saturation

sc200 for Hach UltraSonic Flow Sensor

Flow Rate
0-9999, 0-999.9, 0-99.99 with selectable flow rate units and multiplier

Volume
0-9,999,999 with selectable volume units

Depth
0-1200.0 inches, 0-100.0 feet, 0-30,000 mm, or 0-30.00 meters

Input Filter
999 sec

Totalizers
8-digit resettable LCD software totalizer

Totalized Flow
Gal., ft.^{3}, acre-ft., lit., m^3

Repeatability
±0.1% of span

Sensor-to-Controller Distance (max)
100 m (328 ft.)

Calibration Methods
Cal Depth 1 point
Cal Depth 2 point

sc200 for Hach Paddle Wheel Flow Sensor

Flow Rate
Function of Structure Type: 0-9999, 0-999.9, 0-99.99 with selectable flow rate units and multiplier

Volume
0-9,999,999 with selectable volume units

Input Filter
999 sec

Totalizers
8-digit resettable LCD software totalizer

Totalized Flow
Gal., ft.^{3}, acre-ft., lit., m^3

Sensor-to-Controller Distance (max)
GLI impeller Sensors: 610m (2000 ft.)
Non-GLI Sensors: 91m (300 ft.)

**Specifications subject to change without notice.*

Dimensions

The sc200 controller unit can be installed on a surface, panel, or horizontal or vertical pipe. Pipe Mount hardware is included.
NOTE: Dimensions are in inches [millimeters].

Surface Mounting Dimensions

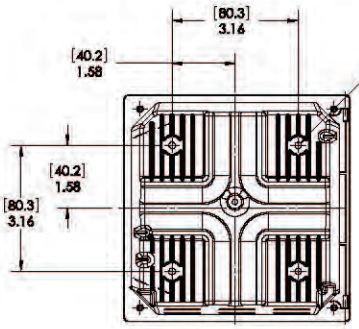

Mounting Dimensions
(Rear View)

OR

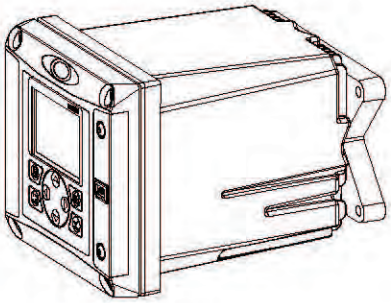

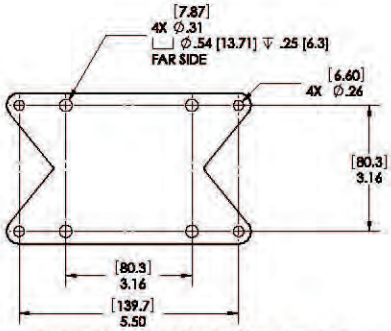

Bracket (supplied) for Surface Mounting (Not compatible with Weather and Sun Shield p/n 9220600 when surface mounting.)

Panel Mounting Dimensions

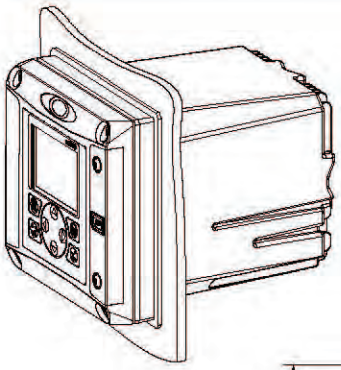

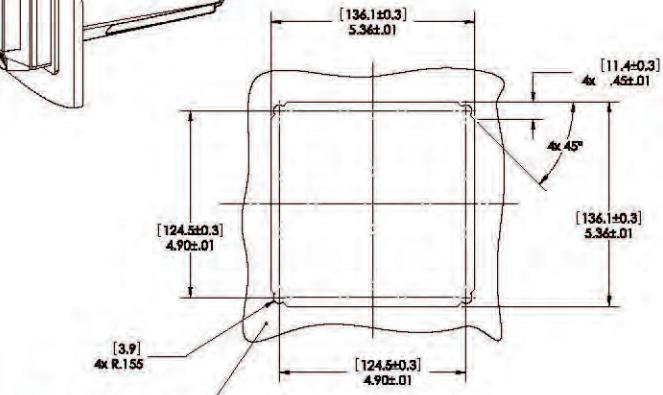

Recommended Cutout for Panel Mounting

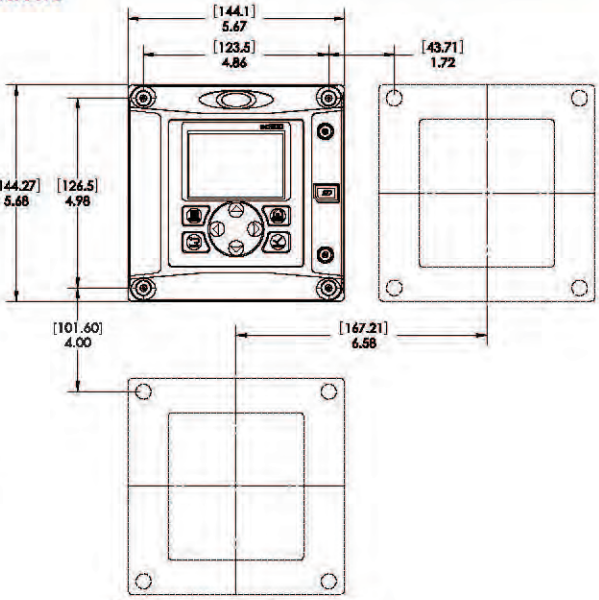

Minimum Spacing Dimensions for Group Mounting

Top and Bottom Views

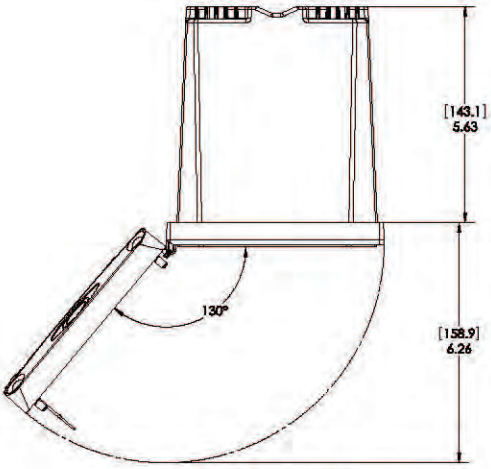

Door Opening Details

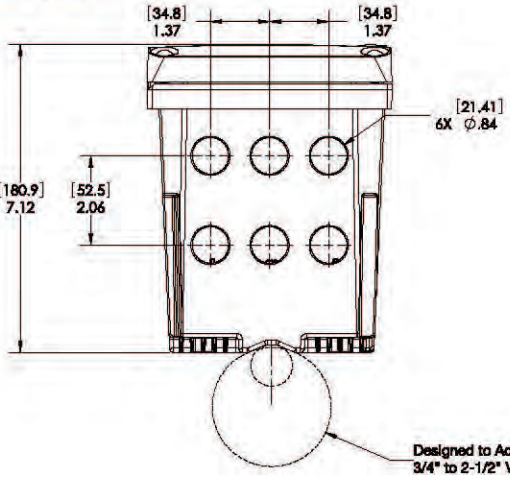

Ordering Information

sc200 for Hach Digital Sensors

LXV404.99.00552	sc200 controller, 2 channel, digital
LXV404.99.00502	sc200 controller, 1 channel, digital
LXV404.99.00542	sc200 controller, 2 channel, digital & mA input
LXV404.99.00512	sc200 controller, 2 channel, digital & analog pH/DO
LXV404.99.00522	sc200 controller, 2 channel, digital & analog Conductivity
LXV404.99.00532	sc200 controller, 2 channel, digital & analog Flow

sc200 for Hach Analog Sensors

LXV404.99.00102	sc200 controller, 1 channel, pH/DO
LXV404.99.00112	sc200 controller, 2 channel, pH/DO
LXV404.99.00202	sc200 controller, 1 channel, Conductivity
LXV404.99.00222	sc200 controller, 2 channel, Conductivity
LXV404.99.00212	sc200 controller, 2 channel, pH/DO & Conductivity
LXV404.99.00302	sc200 controller, 1 channel, Flow
LXV404.99.00332	sc200 controller, 2 channel, Flow
LXV404.99.00312	sc200 controller, 2 channel, Flow & pH/DO
LXV404.99.00322	sc200 controller, 2 channel, Flow & Conductivity

Note: Other Sensor combinations are available. Please contact Hach Technical Support or your Hach representative.

Note: Communication options (MODBUS, Profibus DPV1, and HART) are available. Please contact Hach Technical Support or your Hach representative.

Power Cords

9202900	sc200 power cord with strain relief, 125 Vac
9203000	sc200 power cord with strain relief, 230 Vac, European-style plug

Accessories

9220600	sc200 Weather and Sun Shield with UV Protection Screen
8809200	sc200 UV Protection Screen
9218200	SD card reader (USB) for connection to PC
9218100	4 GB SD card

Sensor and Communication Modules

9012900	pH and DO module
9013000	Conductivity module
9012700	Flow module
9012800	4-20 mA input module
9013200	MODBUS network module
9173900	Profibus network module
9328100	HART network module
9334600	4-20 mA output module

Lit. No. 2665 Rev 5
I11 Printed in U.S.A.
©Hach Company, 2011. All rights reserved.
In the interest of improving and updating its equipment, Hach Company reserves the right to alter specifications to equipment at any time.

At Hach, it's about learning from our customers and providing the right answers. It's more than ensuring the quality of water—it's about ensuring the quality of life. When it comes to the things that touch our lives...

Keep it pure.

Make it simple.

Be right.

For current price information, technical support, and ordering assistance, contact the Hach office or distributor serving your area.

In the United States, contact:

HACH COMPANY World Headquarters
P.O. Box 389
Loveland, Colorado 80539-0389
U.S.A.
Telephone: 800-227-4224
Fax: 970-669-2932
E-mail: orders@hach.com
www.hach.com

U.S. exporters and customers in Canada, Latin America, sub-Saharan Africa, Asia, and Australia/New Zealand, contact:

HACH COMPANY World Headquarters
P.O. Box 389
Loveland, Colorado 80539-0389
U.S.A.
Telephone: 970-669-3050
Fax: 970-461-3939
E-mail: intl@hach.com
www.hach.com

In Europe, the Middle East, and Mediterranean Africa, contact:

HACH LANGE GmbH
Willstätterstraße 11
D-40549 Düsseldorf
GERMANY
Tel: +49 (0) 211 5288-0
Fax: +49 (0) 211 5288-143
E-mail: info@hach-lange.de
www.hach-lange.com

HACH®
Be Right™

Dissolved Oxygen: Hach LDO® Probe, Model 2

Applications

- Wastewater
- Industrial Water
- Drinking Water

Take "No" for an answer when measuring dissolved oxygen with the next generation Hach LDO probe.

No Calibration Required

The Hach LDO probe is ready to work in your process right out of the box with no calibration required for the entire 2 year life of the sensor cap.

No Membranes to Replace

There is virtually no maintenance with Hach's breakthrough luminescent technology, as there are no membranes to replace, no electrolyte solution to replenish, and no anode or cathode to clean.

No Missed Cleaning Cycles

Customizable service indicators trigger a service message so that a cleaning cycle is never missed.

No Drift

A cutting-edge 3D calibration procedure at the factory makes oxygen measurement with the Hach LDO probe more accurate than ever before.

No Complications

A robust new design gives the Hach LDO enhanced durability and reduced size for easier handling.

HACH®

Be Right™

Specifications*

Measuring Range	0 - 20.00 ppm 0 - 20.0 mg/L 0 - 200% saturation
Accuracy	±0.1 ppm Below 5 ppm ±0.2 ppm Above 5 ppm Temperature: ±0.2°C
Response Time	at 20°C: To 95% in less than 60 seconds To 90% in less than 40 seconds
Resolution	0.01 ppm (mg/L) / 0.1% saturation
Repeatability	±0.1 ppm (mg/L)
Operating Temperature	0 to 50°C (32 to 122°F)
Flow Rate	None required
Sensor Immersion Depth	Pressure Limits at 34 m 345 kPa (112 ft.), 345 kPa (50 psi), maximum; accuracy may not be maintained at this depth
Transmission Distance	1000 m (3280 ft.) maximum when used with a termination box
Cable Length	10 m
Wetted Materials	Sensor Cap: Acrylic; Probe Body: CPVC, Polyurethane, Viton, Noryl, 316 Stainless Steel
Dimensions (D x L)	1.95 in x 10.05 in (49.53 mm x 255.27 mm)
Weight	2.2 lbs. (1 kg)

**Subject to change without notice.*

Principal of Operation

The HACH LDO sensor is coated with a luminescent material. Blue light from an LED is transmitted to the sensor surface. The blue light excites the luminescent material. As the material relaxes it emits red light. The time for the red light to be emitted is measured. Between the flashes of blue light, a red LED is flashed on the sensor and used as an internal reference.

Increased oxygen in the sample decreases the time it takes for the red light to be emitted. The time measurements correlate to the oxygen concentration.

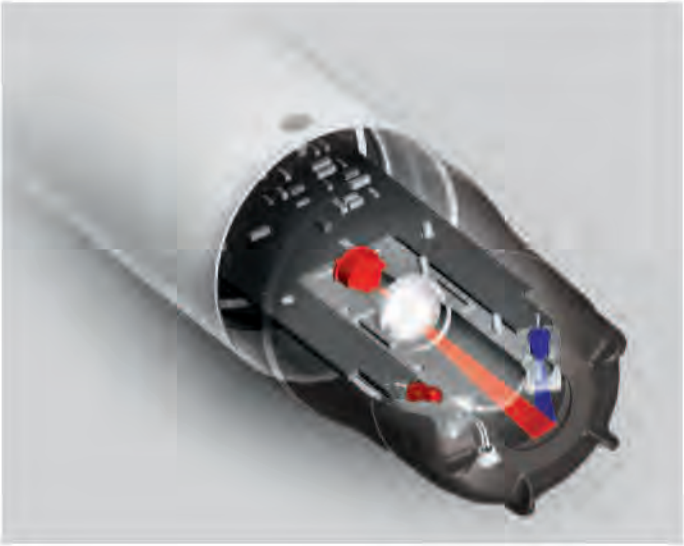

Dimensions

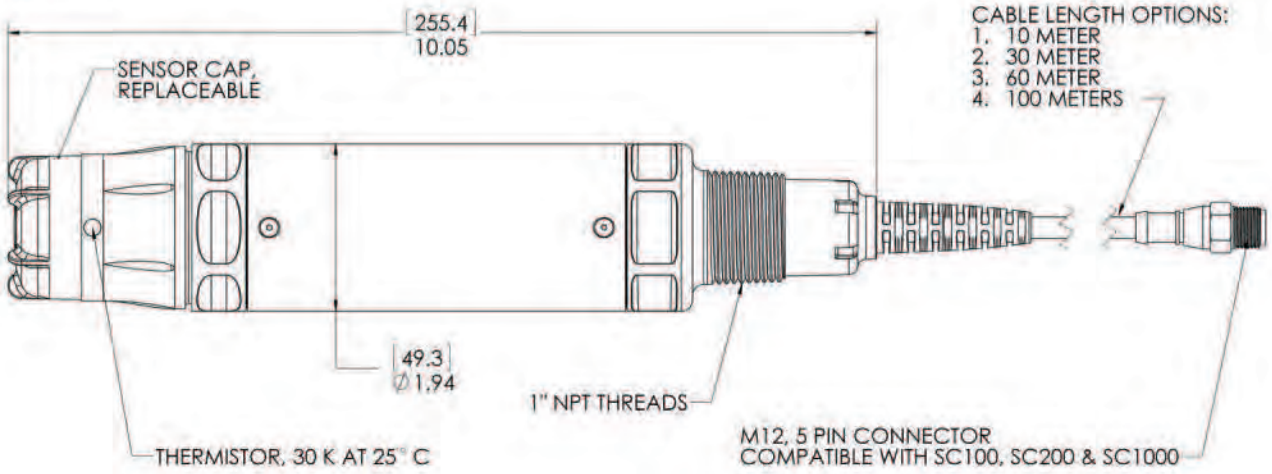

Installation / Mounting

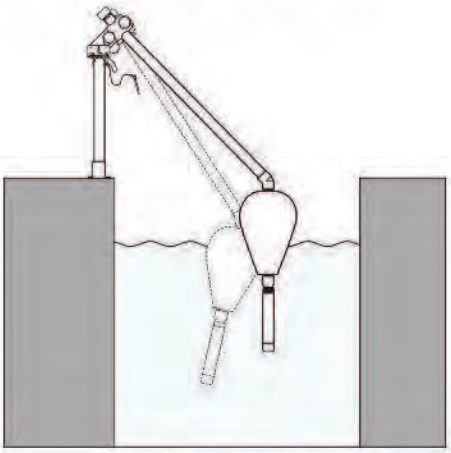

Float Mount Kit

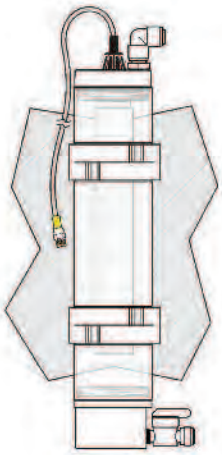

Flow Cell

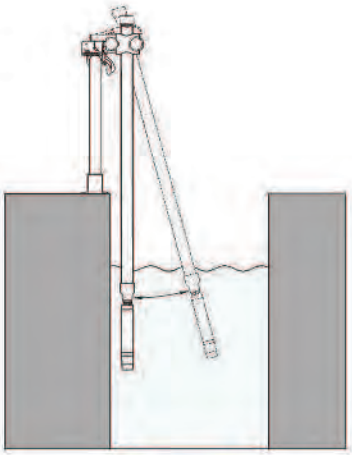

Pole Mount Kit

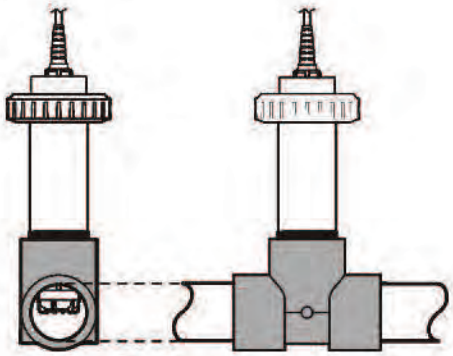

Union Mount Kit

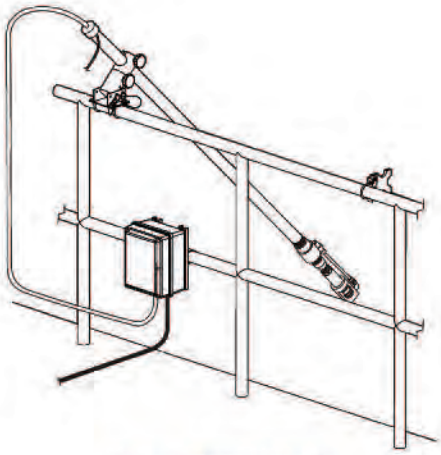

Air Blast Cleaning System

Ordering Information

9020000	Dissolved Oxygen: Hach LDO® Probe
9020000-UPGRADE	LDO Probe, Mounting Conversion Adapter
9020000-SC200	LDO Probe, Mounting Conversion Adapter, sc200 controller with 2 channels

Accessories

5867000	Digital Termination Box
5796000	Digital Extension Cable, 7.7 m (25 ft.)
5796100	Digital Extension Cable, 15 m (50 ft.)
5796200	Digital Extension Cable, 31 m (100 ft.)
6860000	High Output Air Blast Cleaning System, 115 Vac
6860100	High Output Air Blast Cleaning System, 230 Vac
9253500	Air Blast Hardware Components

Replacement Parts

9021100	LDO Model 2 Sensor Cap Replacement Kit

Mounting Kits

9253000	Pole Mount Kit, PVC
9253100	Ball Float Mount Kit, PVC
9257000	Union Mount Kit, PVC
9253400	Mounting Conversion Adapter, LDO Model 1 to LDO Model 2
7300800	1 NPT sc Sensors Flow Cell

Controllers

sc200 Digital Controllers

LXV404.99.00552	sc200 controllers, 2 channels, digital
LXV404.99.00542	sc200 controller, 2 channel, digital & mA input
LXV404.99.00502	sc200 controller, 1 channel, digital
LXV404.99.00512	sc200 controller, 2 channel, digital & pH/DO
LXV404.99.00522	sc200 controller, 2 channel, digital & Conductivity
LXV404.99.00532	sc200 controller, 2 channel, digital & Flow

sc1000 Digital Controllers

LXV402.99.00002	sc1000 Display Module
LXV400.99.1R572	sc1000 Probe Module, 4 sensors, 4 mA Out, 4 mA In, 4 Relays, 110-230V
LXV400.99.1B572	sc1000 Probe Module, 4 sensors, 4 mA Out, 4 mA In, 4 Relays, RS-485 (MODBUS), 110-230V
LXV400.99.1F572	sc1000 Probe Module, 4 sensors, 4 mA Out, 4 mA In, 4 Relays, PROFIBUS DP, 110-230V
LXV400.99.1R582	sc1000 Probe Module, 6 sensors, 4 mA Out, 4 mA In, 4 Relays, 110-230V

HACH COMPANY World Headquarters: Loveland, Colorado USA

United States:	800-227-4224 tel	970-669-2932 fax	orders@hach.com
Outside United States:	970-669-3050 tel	970-461-3939 fax	int@hach.com

www.hach.com

LIT2455 Rev 2
F12 Printed in U.S.A.
©Hach Company, 2012. All rights reserved.
In the interest of improving and updating its equipment, Hach Company reserves the right to alter specifications to equipment at any time.

Be Right™

VAISALA

www.vaisala.com

PTB110 Barometer for Industrial Use

The Vaisala BAROCAP® Barometer PTB110 offers outstanding long-term stability.

Features/Benefits

- Vaisala BAROCAP® sensor
- Several pressure ranges
- Accuracy ±0.3 hPa at +20 °C
- Long-term stability
- On/off control with external trigger
- Output voltage 0 ... 2.5 or 0 ... 5 VDC
- Current consumption less than 4 mA
- Mountable on a (35 mm wide) DIN rail
- NIST traceable (certificate included)

PTB110

The Vaisala BAROCAP® Barometer PTB110 is designed both for accurate barometric pressure measurements at a room temperature and for general environmental pressure monitoring over a wide temperature range.

Vaisala BAROCAP® technology

The PTB110 barometer uses the Vaisala BAROCAP® Sensor, a silicon capacitive absolute pressure sensor developed by Vaisala for barometric pressure measurement applications.

The sensor combines the outstanding elasticity characteristics and mechanical stability of single-crystal silicon with the proven capacitive detection principle.

Accuracy and stability

The excellent long-term stability of the barometer minimizes or even removes the need for field adjustment in many applications.

Applications

The PTB110 is suitable for a variety of applications, such as environmental pressure monitoring, data buoys, laser interferometers, and in agriculture and hydrology.

The compact PTB110 is especially ideal for data logger applications as it has low power consumption. Also an external On/Off control is available. This is practical when the supply of electricity is limited.

Technical data

Operating range (1 hPa=1mbar)

Pressure ranges	500 ...1100 hPa
	600 ...1100 hPa
	800 ...1100 hPa
	800 ...1060 hPa
	600 ...1060 hPa
Temperature range	-40 ...+60 °C (-40 ...+140 °F)
Humidity range	non-condensing

General

Supply voltage	10 ...30 VDC
Suppply voltage control	with TTL level trigger
Supply voltage sensitivity	negligible
Current consumption	less than 4 mA
in shutdown mode	less than 1 µA
Output voltage	0 ...2.5 VDC
	0 ...5 VDC
Output frequency	500 ...1100 Hz
Resolution	0.1 hPa
Load resistance	minimum 10 kohm
Load capacitance	maximum 47 nF
Settling time	1 s to reach full accuracy after power-up
Response time	500 ms to reach full accuracy after a pressure step
Acceleration sensitivity	negligible
Pressure connector	M5 (10-32) internal thread
Pressure fitting	barbed fitting for 1/8"
Minimum pressure limit	0 hPa abs
Maximum pressure limit	2000 hPa abs
Electrical connector	removable connector for 5 wires (AWG 28 ...16)
Terminals	Pin 1: external triggering Pin 2: signal ground Pin 3: supply ground Pin 4: supply voltage Pin 5: signal output
Housing material, plastic cover	ABS/PC blend
Housing classification	IP32
Metal mounting plate	Al
Weight	90 g
Electromagnetic compatibility	Complies with EMC standard EN 61326-1, Electrical equipment for measurement, control and laboratory use - EMC requirements - for use in industrial locations

Accuracy

Linearity*	±0.25 hPa
Hysteresis*	±0.03 hPa
Repeatability*	±0.03 hPa
Calibration uncertainty**	±0.15 hPa
Accuracy at +20 °C***	±0.3 hPa

* Defined as ±2 standard deviation limits of end-point non-linearity, hysteresis error or repeatability error.

** Defined as ±2 standard deviation limits of inaccuracy of the working standard including traceability to NIST.

*** Defined as the root sum of the squares (RSS) of end-point non-linearity, hysteresis error, repeatability error and calibration uncertainty at room temperature.

TOTAL ACCURACY AT	
+15 ... +25 °C (+59 ...+77 °F)	±0.3 hPa
0 ... +40 °C (+32 ...+104 °F)	±0.6 hPa
-20 ... +45 °C (-4 ...+113 °F)	±1.0 hPa
-40 ... +60 °C (-40 ...+140 °F)	±1.5 hPa
Long-term stability	±0.1 hPa/year

Dimensions

Dimensions in mm (inches)

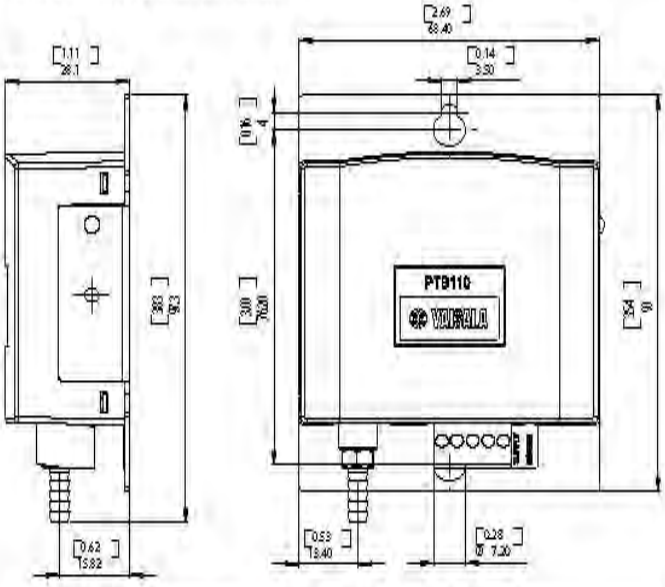

BAROCAP® is a registered trademark of Vaisala.

Ref. B210881EN-B ©Vaisala 2009
This material is subject to copyright protection, with all copyrights retained by Vaisala and its individual partners. All rights reserved. Any logos and/or product names are trademarks of Vaisala or its individual partners. The reproduction, transfer, distribution or storage of information contained in this brochure in any form without the prior written consent of Vaisala is strictly prohibited. All specifications — technical included — are subject to change without notice.

NEW

WAVEANALOG PRO DC/DC

- universally adjustable via DIP switch
- adjustment help via Internet
- 3-way-isolation
- voltage supply from 20-230 VAC/DC
- low power loss
- adjustable transmission frequency
- indication LED

Approvals:

CE c UL us GL

Block diagram

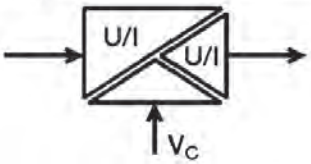

PRO DC/DC

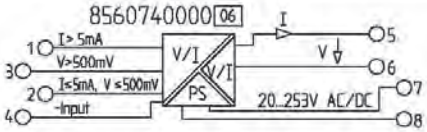

Adjustment help WAVETOOL

This service tool enables quick and uncomplicated configuration of WAVEANALOG PRO. Download from Internet: http://www.weidmuller.com
⇨ Products ⇨ Downloads (see page 257)

Ordering data	Type	Part No.
Screw connection	WAS4 PRO DC/DC	8560740000
Tension clamp connection	WAZ4 PRO DC/DC	8560750000
Input/output	configurable	

Technical data*	
Input (adjustable)	
Voltage uni-/bipolar adjustable	20 mV...200 V
Voltage calibrated ranges	0...±60 mV, 0...±100 mV, 0...±150 mV, 0...±300 mV, 0...±500 mV, 0...±1V, 0...±5V, 0...±10 V, 0...±100 V
Current uni-/bipolar adjustable	0,1 mA...100 mA
Current calibrated ranges	0...±0.3 mA, 0...±1 mA, 0...±5 mA, 0...±16 mA, 0...20 mA, 0...50 mA
Input resistance	
at current input range < 5 mA/> 5 mA	approx. 100 Ω/approx. 5 Ω
at voltage input	approx. 1 MΩ
Input capacity at current input	approx. 1 nF
Voltage input range < 500 mV/> 500 mV	approx. 1 nF/approx. 500 pF
Overload capacity at current input range < 5 mA/> 5 mA	< 75 mA/< 300 mA
Voltage input range < 500 mV/> 500 mV	max. < 20 mA/< 3 mA continuous current
Output (adjustable)	
Voltage uni-/bipolar adjustable	0...10 V
Voltage calibrated ranges	0...±10 V, 2...10 V, 0...±5 V, 1...5 V
Current uni-/bipolar adjustable	0...20 mV
Current calibrated ranges	0...±20 mA, 4...20 mA
Offset	-100%, -50%, 0%, 50%, 100% of measuring span of the chosen output range
Load	
at output current	< 12 V (600 Ω at 20 mA)
at output voltage	< 10 mA (1 kΩ at 10 V)
Offset	20 µA and 10 mV
Residual ripple	< 10 mV_{eff}
Adjustment zero pot	±25% measuring span of the chosen output range
Adjustment span pot	0.33...3.30 x end value of chosen input range
Gain error	< 0.1% of FS
Temperature coefficient	< 60 ppm/K of FS
Cut-off frequency	> 10 kHz, < 10 Hz switch
General	
Voltage supply	20...230 V AC/DC +10%
Power consumption	approx. 1 W
Frequency range	48...62 Hz
Operating temperature	-10°C...+70°C
Storage temperature	-40°C...+85°C
Factory setting	0...10 V/0...10 V 10 Hz
Dimensions W/L/H mm (in.)	12.5/92.4/112.5 (.49/3.64/4.43)
Weight	approx. 100 g
Approvals	CE, UL, GL
Coordination of insulation according to EN 50178, 04/98	
Rated voltage	600 V
Rated surge voltage	5 kV, 1.2/50 us, acc. to IEC 255-4
Overvoltage category	III
Contamination class	2
Test voltage	4 KV_{eff} input against output against auxiliary power
Standards/specifications	EN 50178
EMC standards	DIN EN 61326, EN 61326/A1, EN 50081-2, EN 61000-6-2
Dimensions and accessories	see page 356 + 366

*T_U = 23°C single module

Switch position/setting options

Input range	Switch S1 1	S1 2	S1 3	S1 4	S2 1	S2 2	S2 3	S2 4
0...±60 mV								■
0...±100 mV	■							■
0...±150 mV		■						■
0...±300 mV	■	■						■
0...±500 mV			■					■
0...±1 V	■		■			■		■
0...±5 V		■	■			■		■
0...±10 V	■	■	■			■		■
0...±100 V				■			■	■
0...± -0.3 mA	■			■	■			■
0...±1 mA		■		■	■			■
0...±5 mA	■	■		■	■			■
0...±10 mA			■	■	■			■
0...±20 mA	■		■	■	■			■
0...±50 mA		■	■	■	■			■
0...±20 mA*	■	■	■	■	■			■

*Offset conversion not calibrated

	Switch S2 4
calibrated ranges	■

Span pot activated: input range x 0.33...x 3.30

Output range	Switch S1 5	S1 6	S1 7	S3 1	S3 2
0...±10 V				■	■
2...10 V	■			■	■
0...±5 V		■		■	■
1...5 V	■	■		■	■
0...±20 mA			■		
4...20 mA	■		■		

Offset (in % of output voltage)	S1 8	S1 9	S1 10	S2 5
0%				■
-100%	■			■
-50%		■		■
+50%	■	■		■
+100%			■	■

Zero pot activated: additional ±25%

	Switch S3 3
Bandwidth 10 kHz	
Bandwidth 10 Hz	■

Settings shown on side of housing.

■ = on
= off

ANALOG SIGNAL PROCESSING

Danfoss PX Self-Regulating Cable

Flexible Solutions

- Pipe freeze protection for metal and PVC pipes
- Tank freeze protection
- Roof and gutter deicing
- Sprinkler freeze protection

Danfoss PX Cable

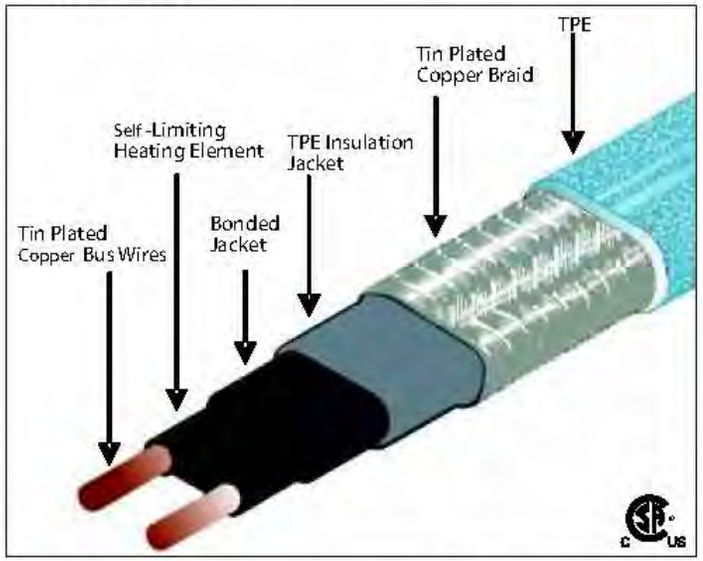

Danfoss PX is a self-limiting parallel heating cable. The power output of the conductive core material increases or decreases in response to ambient temperature changes.

Professional's Benefits

- Cut and splice in the field
- Rugged 16 AWG bus cable with longer runs
- Wide variety of wattages
- Cables can overlap
- 2 year warranty

Typical Install

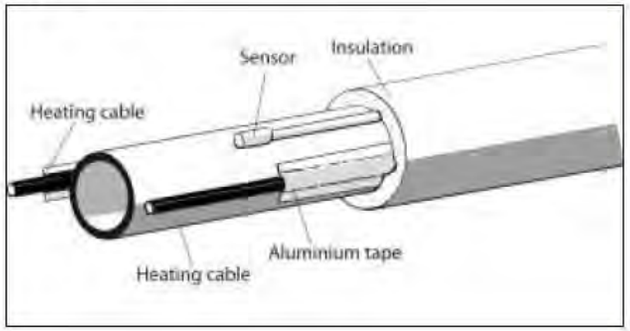

PX Line Voltage Thermostat

The **PX** thermostat is designed for temperature control applications and serves as operational control only. The unit is housed in a weatherproof NEMA 4X enclosure.

- Automatic activation - reduces operational costs
- Remote bulb temperature sensing
- Large, Readily Visible Dial
- Wall mounted

Electric Cable Heating Solutions

Danfoss offers a one stop solution for floor heating, snow melting, pipe tracing, and roof and gutter needs.

Danfoss RX Roof and Gutter

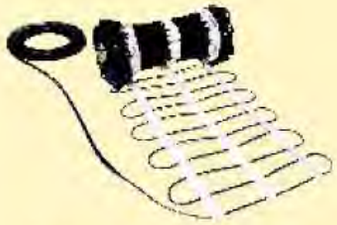

Danfoss GX Snow Melting

Danfoss LX Floor Heating Mat

Project: Tappan Terminal
D&M Job #: 8182

Danfoss
Toll Free: 866 676-8062
Fax: 905-285-2055
www.LX.Danfoss.com

© Copyright 2009 Danfoss

NA EFHPXP06 Printed in Canada

The Professional's Choice

PX-F Self Regulating Cable / Spools

Color	Part No.	Voltage	Output at 50°F	Spool size (feet)
Blue	088L1402	120V	3W/ft	250
	088L1470	120V	3W/ft	1,000
	088L1412	240V	3W/ft	250
	088L1471	240V	3W/ft	1,000
Black	088L1422	120V	5W/ft	250
	088L1472	120V	5W/ft	1,000
	088L1432	240V	5W/ft	250
	088L1473	240V	5W/ft	1,000
Red	088L1442	120V	8W/ft	250
	088L1474	120V	8W/ft	1,000
	088L1448	240V	8W/ft	250
	088L1475	240V	8W/ft	1,000
Grey	088L1452	120V	10W/ft	250
	088L1476	120V	10W/ft	1,000
	088L1456	240V	10W/ft	250
	088L1477	240V	10W/ft	1,000

PX-F Self Regulating Cable / Cut to order* (by ft.)

Color	Part No.	Voltage	Output at 50°F
Blue	088L1406	120V	3W/ft
	088L1416	240V	3W/ft
Black	088L1426	120V	5W/ft
	088L1436	240V	5W/ft
Red	088L1443	120V	8W/ft
	088L1449	240V	8W/ft
Grey	088L1453	120V	10W/ft
	088L1455	240V	10W/ft

* Minimum order: 25 ft.

Controls

Part No.	Description
088L3422	Line Voltage Thermostat with Weatherproof Enclosure

Danfoss PX Output Curves

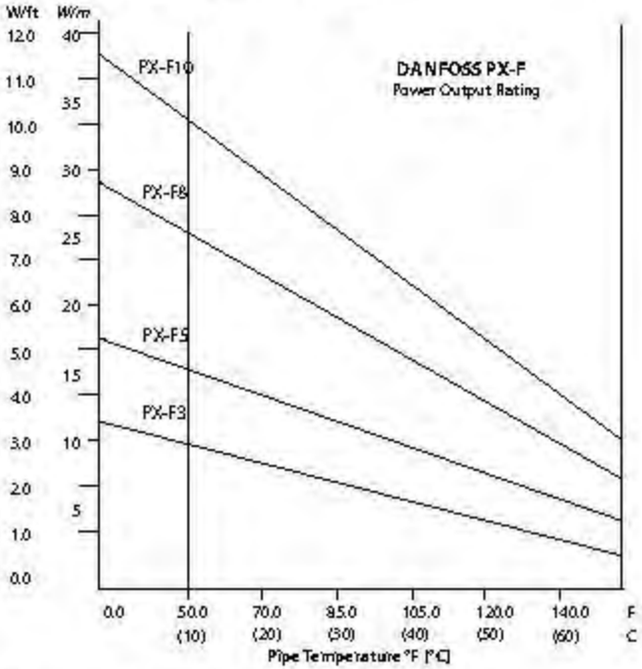

Voltage Conversion Table

W/ft (W/m) @ 50°F (10°C)

CABLE	208V	240V	277V
PX-F3	2.5 (8.5)	3.0 (10.0)	3.5 (12.5)
PX-F5	4.0 (13.5)	5 (15.0)	5.5 (17.5)
PX-F8	7.0 (23.0)	8 (25.5)	8.5 (27.5)
PX-F10	9.5 (31.5)	10.0 (33.0)	10.5 (35.0)

Accessories

Part No.	Description
088L0006	Power connection kit, cable to power lead, includes one end seal
088L0008	Splice/Tee Kit
088L0009	Aluminum application tape (75ft.)
088L0023	Power connection kit, cable to box, includes one end seal
088L0412	Warning labels, 10pcs

Danfoss **PX**
BRINGING WARMTH TO LIFE

PX Self-Regulating Cable
The PROFESSIONAL'S Choice

KAESER COMPRESSORS

Built for a lifetime.™

Condensate Management

KCF Series Oil/Water Separators

Compressed air condensate

Compressed air condensate is a by-product of all compressors. It is a mixture of mostly water with ambient particulates, airborne hydrocarbons, and traces of compressor fluids that have been concentrated during the compression process. This type of oil-water mixture may be classified as hazardous waste, and federal and local environmental laws regulate the discharge of untreated compressor condensate. Kaeser's KCF condensate management system offers a reliable and economical method of oil/water separation to comply with environmental regulations.

Condensate disposal made easy

As disposal costs for waste oil increase and environmental regulations become more stringent, the benefits of Kaeser's KCF oil/water separators are clear. The KCF eliminates the need for expensive waste collection services by removing oil, leaving most of the condensate to be safely discharged into a sanitary drain*. KCF filters don't need to be changed frequently and the spent filters are simply sent to the landfill. Condensate management doesn't get any easier.

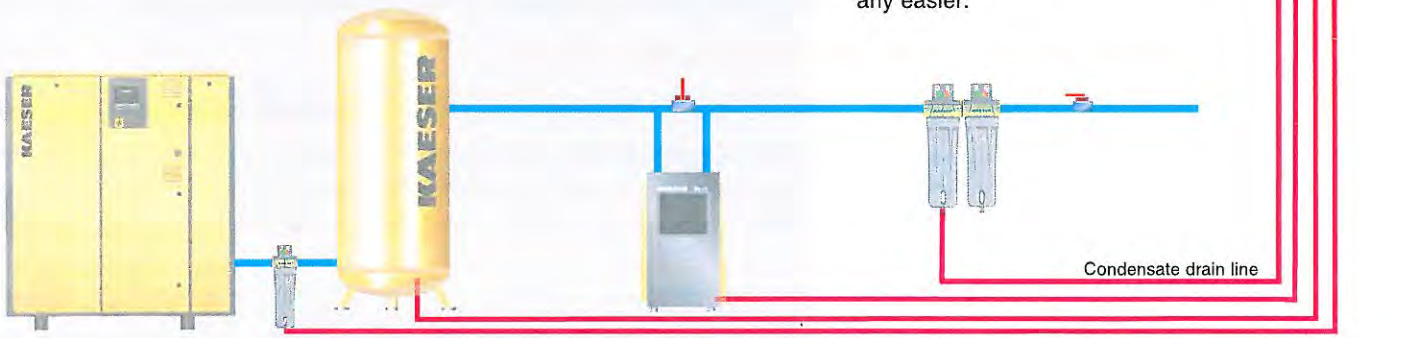

Condensate must be collected and drained from each component in an air system. A variety of condensate drains are available to provide reliable condensate removal.

How it works:

Contaminated condensate 1 flows under pressure into the pressure relief chamber. 2 Here, the pressure is released to prevent turbulence downstream. The contaminated condensate flows into the high capacity pre-filter 3, which has an ideal inside to outside flow pattern to trap the remaining oil droplets. It also captures any residual floating oil in the upper chamber.

As the pre-treated condensate enters the main filter cartridge 4 any remaining oil is adsorbed and locked into the advanced filter material where it cannot escape. The condensate is now fully treated and flows around the lower chamber wall 5 toward the clean water outlet, 6 ready for discharge directly into the sewer system.

Always observe local guidelines for disposal of effluents.

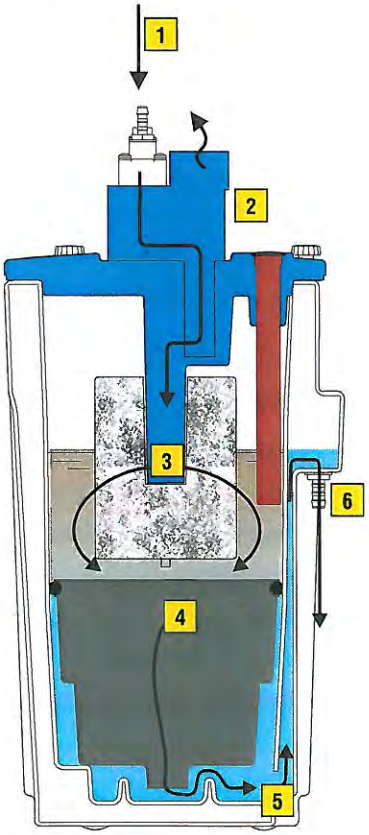

Safe, Clean, and Cost Effective

Features

- Multiple inlet connections
  - two on KCF 25 and 50
  - four on KCF 100, 200, and 400

- Lid removal knobs (no tools needed)
- Lifting handles for filter cartridges
- Disposal bag comes with each set of filters
- Filter change indicator on KCF 200 and 400

Options

- Immersion heater with thermostat for cold site installations (KCF 50, 200, and 400 only)
- High pressure relief chamber (up to 580 psig)
- Flow splitter allows up to four (4) parallel piped units for large air flow applications
- High condensate level alarm

Easy to install

- No electrical connections
- Multiple inlet connections
- No hard piping required
- Lightweight

Reliable operation

- Works with all compressor fluid types (see specs)
- Durable roto-molded from high-strength, cross-linked polyethylene

Simple Maintenance

- Just one filter to replace
- Lifting handles provided
- Quick and clean

Specifications

Model	Compressor Capacity (scfm)					Condensate Inlet (hose connection) (in.)	Water Outlet (hose connection) (in.)	Weight Empty (lbs.)	Dimensions W x D x H (in.)
	Screw Compressors			Piston Compressors 1- and 2 -stage					
	Mineral Oil Turbine Oil (additive free)	Diesters PAO	Polyglycol	Mineral Oil Turbine Oil (additive free)	Synthetic Oil				
KCF 25	110	90	55	90	55	2 x ½	½	7.7	11.4 x 8.7 x 20.8
KCF 50	220	180	110	180	110		½	12.7	14.8 x 10 x 23.4
KCF 100	450	340	225	340	225	3 x ½ and 1 x 1	1	19.5	18.1 x 20.5 x 24
KCF 200	900	600	450	600	450		1	70.5	20.5 x 22.6 x 44.1
KCF 400	1800	1200	900	1200	900		1	92.6	25.6 x 27.6 x 46.9

Notes: Maximum operating pressure of inlet is 232 psig. Operating temperature range is 41-140°F.
Rates are based on air compressor inlet conditions at 70°F and 70% relative humidity using oils with the best demulsibility in their class. Ratings for other conditions may vary significantly; consult Kaeser for specific values. Using automatic drain traps without any air discharge/loss is highly recommended. Mixing of oils or additive packages used in lubricants may have an adverse effect on demulsibility*.

Manifolds are available for each unit. Consult factory for larger applications.

*Demulsibility is an oil's ability to separate from water in a given amount of time.

Kaeser Condensate Manifold (KCM)

The KCM is a small vessel that collects condensate from multiple sources and safely diffuses residual air pressure to maximize separation effectiveness in the Kaeser Condensate Filter (or any oil/water separator).

Available in two models that vent up to 4 and 8 condensate lines respectively, KCM is constructed from sturdy schedule 80 PVC and will accept condensate from air systems operating at up to 230 psig. Condensate lines are connected via easy push-to-connect fittings. A venting muffler, mounting hardware, and 5 foot outlet hose are included.

Specifications are subject to change without notice.

KAESER COMPRESSORS

Built for a lifetime.™

www.kaeser.com

Kaeser Compressors, Inc.
511 Sigma Drive
Fredericksburg, VA 22408 USA
Telephone: 540-898-5500
Toll Free: 800-777-7873
info.usa@kaeser.com

Kaeser Compressors Canada Inc.
3760 La Verendrye Street
Boisbriand, QC J7H 1R5 CANADA
Telephone: (450) 971-1414
Toll free: (800) 477-1416
info.canada@kaeser.com

Kaeser Compresores de México S de RL de CV
Calle 2 #123
Parque Industrial Juríca
76100 Querétaro, Qro.
Telephone: 01 (442) 218 64 48
sales.mexico@kaeser.com

Kaeser Compresores de Guatemala y Cia. Ltda.
Calz. Atanasio Tzul 21-00, zona 12
El Cortijo II, Bodega 501
01012–Guatemala City
Telephone: +502 2412-6000
info.guatemala@kaeser.com

© 2013 Kaeser Compressors, Inc. All rights reserved. 04/13

USKCF

FEDERAL SIGNAL CORPORATION

Fireball® Strobe Warning Light

Model FB2PST and FB2PST-I

LIGHT DUTY STROBE LIGHT

- Available in 12-24VDC, 120VAC and 240VAC
- Six dome colors
- 10,000 hour strobe tube
- Integrated 1/2-inch NPT pipe and surface mount
- Indoor/outdoor use
- Type 4X, IP66 enclosure
- UL and cUL Listed and CSA Certified

Federal Signal's brightest and most compact strobe light, the Fireball® emits a powerful "lightning bolt" flash of light. Approximately five inches tall and four inches in diameter and rated at 300 effective candela, the Fireball is an economical solution to a wide variety of stationary and vehicular warning requirements. The Fireball is available in 12-24VDC, 24VDC, 120VAC and 240VAC. All models are UL Listed and CSA Certified. The FB2PST is available in six colors – Amber, Blue, Clear, Green, Magenta, and Red.

The 24VDC Model FB2PST-I features a voltage in-rush limiting PCB design that provides greater compatibility with factory automation control systems and less electrical interference with in-rush sensitive devices.

The Fireball features a unique dome that twists off easily for quick dome and lamp replacements. The newly redesigned base features an integrated 1/2-inch NPT pipe mount base as well as the three holes required for surface mount configurations. Black epoxy paint is electrostatically applied to the base for superior corrosion resistance. The Fireball dome and base design provides a watertight, dust-tight and corrosion resistant Type 4X rating.

The FB2PST is designed for stationary pipe and surface mount applications.

The Fireball can be used in any application where a superior visual signal is needed. It is especially effective in the warning of industrial hazards, process control, status indication and in areas with high ambient noise levels.

Federal Signal's Fireball Strobe is a very low-maintenance warning light for industrial applications where a vibration-resistant light is required to signal an emergency or process status.

Model	Voltage	Operating Current	Flash Rate/ Minute	Candela Peak[1]	Candela ECP[2]	Mount
FB2PST-012-024 *	12-24VDC	1.70-0.70 amps	80	1,000,000	300	1/2" NPT Pipe/Surface
FB2PST-I-024 *	24VDC	0.70 amps (2.0 amp In-rush)	80	1,000,000	300	1/2" NPT Pipe/Surface
FB2PST-120 *	120VAC 50/60Hz	0.25 amps	90	1,000,000	300	1/2" NPT Pipe/Surface
FB2PST- 240 *	240VAC 50/60Hz	0.20 amps	90	1,000,000	300	1/2" NPT Pipe/Surface

** Indicates color: (A) Amber, (B) Blue, (C) Clear, (G) Green (M) Magenta or (R) Red*

[1] Peak candela is the maximum light intensity generated by a flashing light during its light pulse

[2] ECP (Effective Candela) is the intensity that would appear to an observer if the light were burning steadily

5 yr FEDERAL SIGNAL WARRANTY

FIREBALL® STROBE WARNING LIGHT (FB2PST / FB2PST-1)

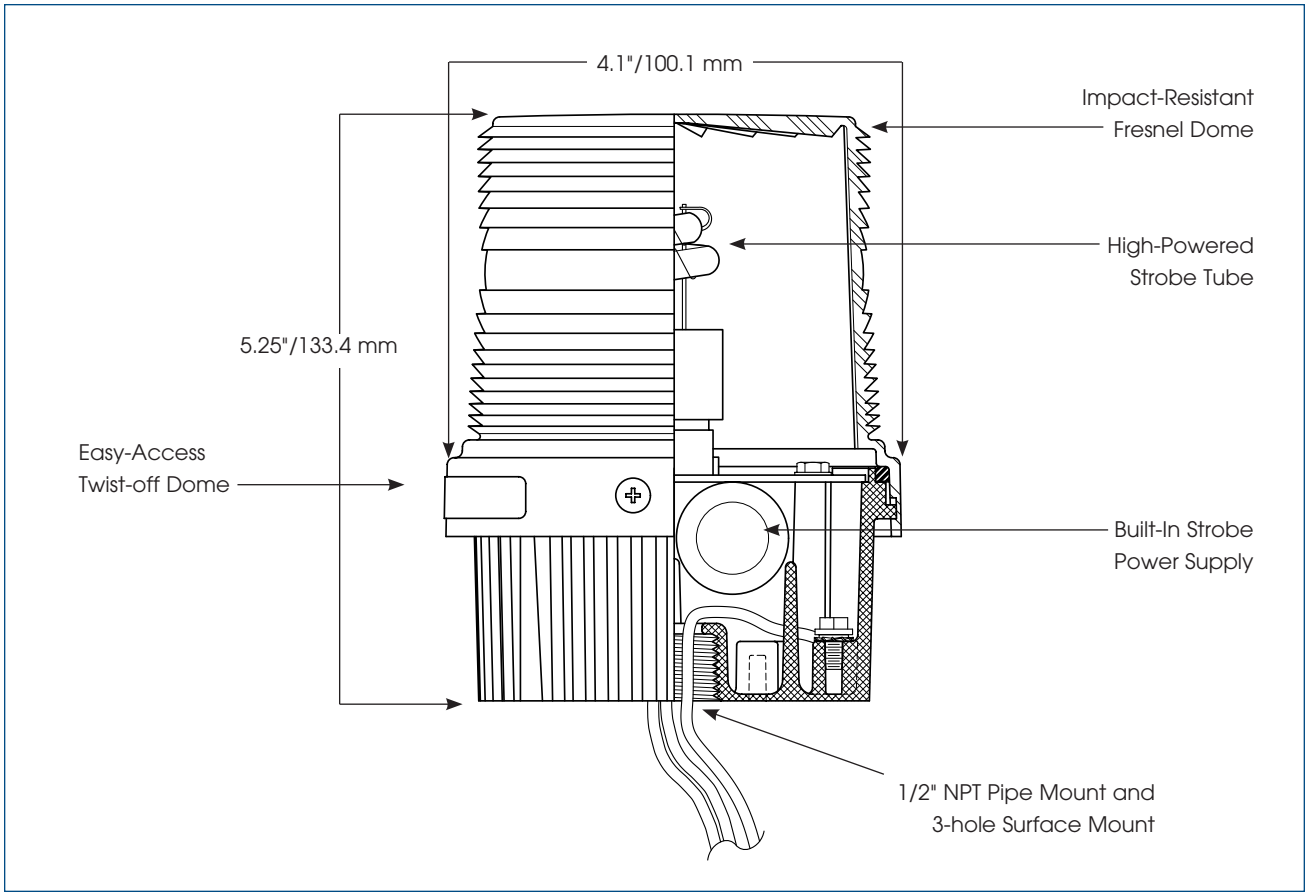

SPECIFICATIONS

Lamp Life:	10,000 Hours	10,000 Hours
Light Source:	Strobe tube	Strobe tube
Operating Temperature:	-31°F to 150°F	-35˚C to 66˚C
Net Weight:	2.0 lbs.	0.9 kg
Shipping Weight:	2.12 lbs.	0.96 kg
Height:	5.25"	133.4 mm
Diameter:	4.10"	100.1 mm

HOW TO ORDER

- Specify model, voltage and color
- Optional Accessories:
  Corner Bracket (LCMB2)*
  Wall Bracket (LWMB2)*
- Please refer to Model Number Index FB2PST beginning on page 372

* Not Type 4X rated.

REPLACEMENT PARTS

Description	***Part Number***	***Description***	***Part Number***
Dome, Amber	K8550320A	PC Assembly, 12-24VDC	K2001202C
Dome, Blue	K8550320A-01	PC Assembly, 120VAC	K200D866G
Dome, Clear	K8550320A-02	PC Assembly, 240VAC	K200D866G-01
Dome, Green	K8550320A-03	Strobe Tube, Series A4, A5, B	K8107177A
Dome, Red	K8550320A-04	120VAC Fuse	K148A155A-01
Dome, Magenta	K8550320A-05		

omega.com®
OMEGA®

PSW20 Series

Pressure, vacuum or differential pressure switches

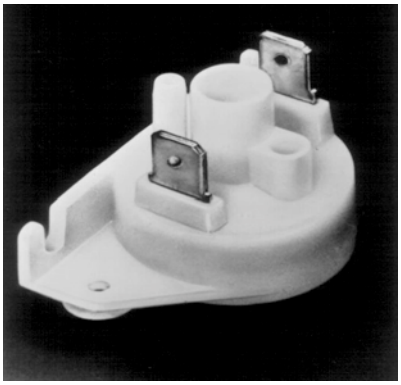

INSTRUCTION SHEET

M4067-0504

Shop online at: omega.com e-mail: info@omega.com
For latest product manuals: omegamanual.info

Installation Instructions for OMEGA PSW20 Series: Pressure, Vacuum and Differential Pressure Switches.

General

The PSW20 series is single pole switch that can be used as a pressure or vacuum switch (from 0.40 in W. C. to 20 inches W. C.) or as a pressure differential switch. The switch can respond to rapid pulsing and the gold plated silver contacts will handle low level switching currents.

Mounting Instructions

Switch may be mounted in horizontal or vertical position, through 0.12" (3mm) holes on 1.34" (34mm) centerline, with suitable clearances to accommodate 0.15" I.D tubing and electrical connectors – see diagram for dimensions.

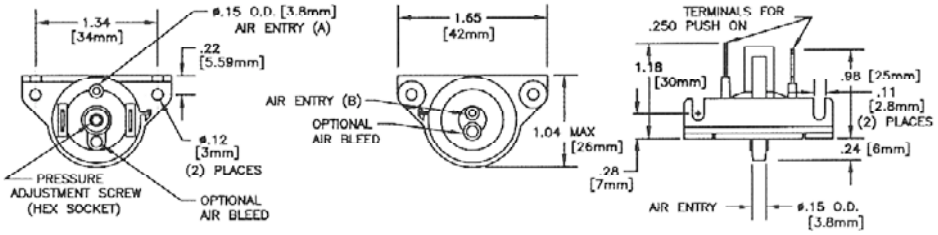

Electrical, Pneumatic and Material/Mechanical Specification

Part Number	Pressure range (inches water, gauge)		
	Pressure	Vacuum	Differential
PSW20A	0.4-15	0.4-15	.04-15
PSW20B	1-20	1-20	1-20

Part Number	Standard Electrical rating		Repeat Accuracy	Contact Resistance (ohms)
	Max. Resistive	Min Resistive	Constant Temperature	
PSW20A	750ma 250VAC	5 ma 3 VDC	+/- 4%	0.04
PSW20B	1 amp 250 VAC	5 ma 3 VDC	+/- 3%	0.02

Body	Acetal
Diaphragm	EPDM is standard; Nitrile available. NOTE: EPDM should not be used in petroleum applications
Contacts	Gold plated silver
Springs	Plated phosphor bronze
Terminals	Plated copper or brass
Adjusting screw	Stainless steel or zinc plated SS
Weight	9 grams (0.3oz)
Operating temperature	-30 C to +65 C (-23F to 149F)
Listings	UL recognized for 100,000 operations CSA certified

Connections and Adjustment

Pressure Switching – Normally Open Contacts

Connect the pressure source to inlet port B (see diagram) and set the adjusting screw to the desired pressure. Turning the screw clockwise narrows the gap between contacts and decreases the pressure set point. Turning the pressure adjusting screw counterclockwise increases the set point. Note: the media entering the diaphragm through Port B is separated from the electrical contacts by the diaphragm.

Pressure Switching – Normally Closed Contacts

Connect the pressure source to Port A and monitor continuity across the terminals. Slowly turn the adjusting screw clockwise, narrowing the gap between contacts until the contacts are closed. Apply the set point pressure which will open the contacts. Continue to turn the adjusting screw clockwise until the contacts make and break at the desired point.

Vacuum Switching

Repeat the above procedure using Port A for Normally Open Contacts and Port B for Normally Closed Contacts.

Media in Contact with Electrical Contacts

Note that the pressure media entering through Port A is in direct contact with the electrical contacts in the switch, whereas the pressure media entering through Port B is separated from the electrical contacts by the diaphragm.

Note: The EPDM diaphragm should not be used with petroleum products. Specify Nitrile for these applications.

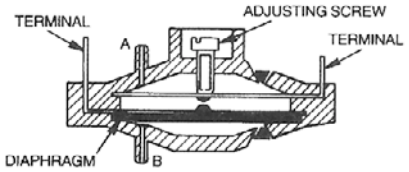

CONTACTS SET NORMALLY OPEN

PORT A: VACUUM N.O.
PORT B: PRESSURE N.O.

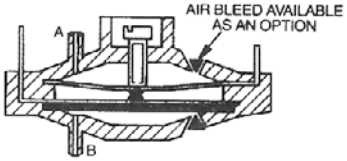

CONTACTS SET NORMALLY CLOSED

PORT A: PRESSURE N.C.
PORT B: VACUUM N.C.

omega.com®
OMEGA®

OMEGAnet® Online Service www.omega.com	Internet e-mail info@omega.com

Servicing North America:

USA: ISO 9001 Certified
One Omega Drive, Box 4047
Stamford CT 06907-0047
Tel: (203) 359-1660 FAX: (203) 359-7700
e-mail: info@omega.com

Canada:
976 Bergar
Laval (Quebec) H7L 5A1, Canada
Tel: (514) 856-6928 FAX: (514) 856-6886
e-mail: info@omega.ca

For immediate technical or application assistance:

USA and Canada: Sales Service: 1-800-826-6342 / 1-800-TC-OMEGA®
Customer Service: 1-800-622-2378 / 1-800-622-BEST®
Engineering Service: 1-800-872-9436 / 1-800-USA-WHEN®
TELEX: 996404 EASYLINK: 62968934 CABLE: OMEGA

Mexico: En Español: (001) 203-359-7803 e-mail:espanol@omega.com
FAX: (001) 203-359-7807 info@omega.com.mx

Servicing Europe:

Benelux:
Postbus 8034, 1180 LA Amstelveen, The Netherlands
Tel: +31 (0)20 3472121 FAX: +31 (0)20 6434643
Toll Free in Benelux: 0800 0993344
e-mail: sales@omegaeng.nl

Czech Republic:
Frystatska 184, 733 01 Karviná, Czech Republic
Tel: +420 (0)59 6311899 FAX: +420 (0)59 6311114
Toll Free: 0800-1-66342 e-mail: info@omegashop.cz

France:
11, rue Jacques Cartier, 78280 Guyancourt, France
Tel: +33 (0)1 61 37 2900 FAX: +33 (0)1 30 57 5427
Toll Free in France: 0800 466 342
e-mail: sales@omega.fr

Germany/Austria:
Daimlerstrasse 26, D-75392 Deckenpfronn, Germany
Tel: +49 (0)7056 9398-0 FAX: +49 (0)7056 9398-29
Toll Free in Germany: 0800 639 7678
e-mail: info@omega.de

United Kingdom: ISO 9002 Certified
One Omega Drive, River Bend Technology Centre
Northbank, Irlam, Manchester
M44 5BD United Kingdom
Tel: +44 (0)161 777 6611 FAX: +44 (0)161 777 6622
Toll Free in United Kingdom: 0800-488-488
e-mail: sales@omega.co.uk

It is the policy of OMEGA to comply with all worldwide safety and EMC/EMI regulations that apply. OMEGA is constantly pursuing certification of its products to the European New Approach Directives. OMEGA will add the CE mark to every appropriate device upon certification.

The information contained in this document is believed to be correct, but OMEGA Engineering, Inc. accepts no liability for any errors it contains, and reserves the right to alter specifications without notice. **WARNING:** These products are not designed for use in, and should not be used for, human applications.

WARRANTY/DISCLAIMER

OMEGA ENGINEERING, INC. warrants this unit to be free of defects in materials and workmanship for a period of **13 months** from date of purchase. OMEGA's WARRANTY adds an additional one (1) month grace period to the normal **one (1) year product warranty** to cover handling and shipping time. This ensures that OMEGA's customers receive maximum coverage on each product.

If the unit malfunctions, it must be returned to the factory for evaluation. OMEGA's Customer Service Department will issue an Authorized Return (AR) number immediately upon phone or written request. Upon examination by OMEGA, if the unit is found to be defective, it will be repaired or replaced at no charge. OMEGA's WARRANTY does not apply to defects resulting from any action of the purchaser, including but not limited to mishandling, improper interfacing, operation outside of design limits, improper repair, or unauthorized modification. This WARRANTY is VOID if the unit shows evidence of having been tampered with or shows evidence of having been damaged as a result of excessive corrosion; or current, heat, moisture or vibration; improper specification; misapplication; misuse or other operating conditions outside of OMEGA's control. Components which wear are not warranted, including but not limited to contact points, fuses, and triacs.

OMEGA is pleased to offer suggestions on the use of its various products. However, OMEGA neither assumes responsibility for any omissions or errors nor assumes liability for any damages that result from the use of its products in accordance with information provided by OMEGA, either verbal or written. OMEGA warrants only that the parts manufactured by it will be as specified and free of defects. OMEGA MAKES NO OTHER WARRANTIES OR REPRESENTATIONS OF ANY KIND WHATSOEVER, EXPRESS OR IMPLIED, EXCEPT THAT OF TITLE, AND ALL IMPLIED WARRANTIES INCLUDING ANY WARRANTY OF MERCHANTABILITY AND FITNESS FOR A PARTICULAR PURPOSE ARE HEREBY DISCLAIMED. LIMITATION OF LIABILITY: The remedies of purchaser set forth herein are exclusive, and the total liability of OMEGA with respect to this order, whether based on contract, warranty, negligence, indemnification, strict liability or otherwise, shall not exceed the purchase price of the component upon which liability is based. In no event shall OMEGA be liable for consequential, incidental or special damages.

CONDITIONS: Equipment sold by OMEGA is not intended to be used, nor shall it be used: (1) as a "Basic Component" under 10 CFR 21 (NRC), used in or with any nuclear installation or activity; or (2) in medical applications or used on humans. Should any Product(s) be used in or with any nuclear installation or activity, medical application, used on humans, or misused in any way, OMEGA assumes no responsibility as set forth in our basic WARRANTY/DISCLAIMER language, and, additionally, purchaser will indemnify OMEGA and hold OMEGA harmless from any liability or damage whatsoever arising out of the use of the Product(s) in such a manner.

RETURN REQUESTS / INQUIRIES

Direct all warranty and repair requests/inquiries to the OMEGA Customer Service Department. BEFORE RETURNING ANY PRODUCT(S) TO OMEGA, PURCHASER MUST OBTAIN AN AUTHORIZED RETURN (AR) NUMBER FROM OMEGA'S CUSTOMER SERVICE DEPARTMENT (IN ORDER TO AVOID PROCESSING DELAYS). The assigned AR number should then be marked on the outside of the return package and on any correspondence.

The purchaser is responsible for shipping charges, freight, insurance and proper packaging to prevent breakage in transit.

PATENT NOTICE: U. S. Pat. No. 6,074,089; 5,465,838 / Canada 2,228,333; 2,116,055 / UK GB 2,321,712 / Holland 1008153 / Israel 123052 / France 2 762 908 / EPO 0614194. Other patents pending.

FOR **WARRANTY** RETURNS, please have the following information available BEFORE contacting OMEGA:
1. Purchase Order number under which the product was PURCHASED,
2. Model and serial number of the product under warranty, and
3. Repair instructions and/or specific problems relative to the product.

FOR **NON-WARRANTY** REPAIRS, consult OMEGA for current repair charges. Have the following information available BEFORE contacting OMEGA:
1. Purchase Order number to cover the COST of the repair,
2. Model and serial number of the product, and
3. Repair instructions and/or specific problems relative to the product.

OMEGA's policy is to make running changes, not model changes, whenever an improvement is possible. This affords our customers the latest in technology and engineering.

OMEGA is a registered trademark of OMEGA ENGINEERING, INC.

© Copyright 2004 OMEGA ENGINEERING, INC. All rights reserved. This document may not be copied, photocopied, reproduced, translated, or reduced to any electronic medium or machine-readable form, in whole or in part, without the prior written consent of OMEGA ENGINEERING, INC.

M4067/0504

Appendix B

Record Drawings

CITY: SYRACUSE, NY DIV/GROUP: ENV/CADD DB:K.SARTORI PIC:M.FLEISCHNER PM: W.MCCUNE TM: J. ROBERTSON LYR:ON=*;OFF=*REF*
G:\ENVCAD\SYRACUSE\ACT\B0046918\0003\00005\DWG\CONTRACT\RECORD\46918Q01.dwg LAYOUT: COVER SAVED: 9/17/2013 9:16 AM ACADVER: 18.1S (LMS TECH) PAGESETUP: DWG TO PDF PLOTSTYLETABLE: PLTCONT.CTB PLOTTED: 9/17/2013 9:16 AM BY: GETTS, BRIAN
XREFS: IMAGES:
46918X01.tif

RECORD DRAWINGS

GROUNDWATER REMEDIATION SYSTEM

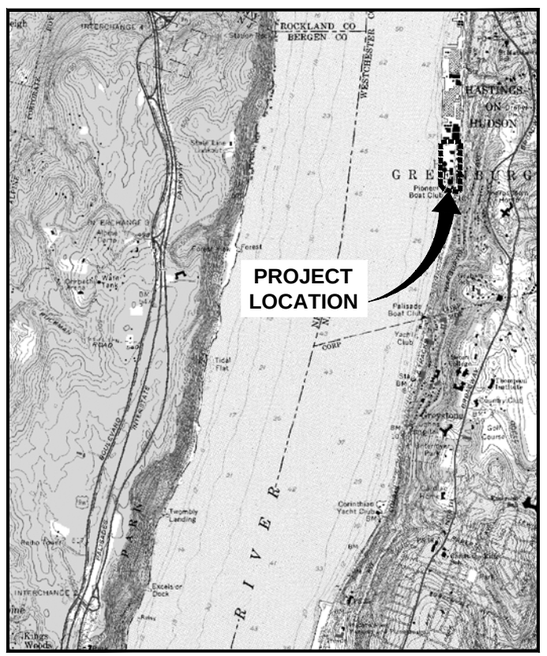

REFERENCE: BASE MAP USGS 7.5 MINUTE QUADRANGLE., HUDSON NORTH, N.Y., 1953. HUDSON SOUTH, N.Y., 1963. PHOTOREVISED 1980.

LOCATION MAP

0 2000' 4000'
GRAPHIC SCALE

SEPTEMBER 2013

FORMER TAPPAN TERMINAL SITE
HASTINGS-ON-HUDSON, NEW YORK

ARCADIS

ARCADIS OF NEW YORK, INC.

RECORD DRAWINGS
TO THE BEST OF OUR KNOWLEDGE, INFORMATION AND BELIEF, THESE RECORD DRAWINGS SUBSTANTIALLY REPRESENT THE PROJECT AS CONSTRUCTED.

DATE_____BY_____

(RECORD DRAWING: MADE FROM COVER, TRACER NO. B0046918/0001/00003/DWG/CONTRACT/46918Q01.DWG, DATED 7/18/12)

INDEX TO DRAWINGS

COVER
1 SITE PLAN
2 PROCESS FLOW DIAGRAM
3 PIPING AND INSTRUMENTATION DIAGRAM (1)
4 PIPING AND INSTRUMENTATION DIAGRAM (2)
5 LEGEND, ABBREVIATIONS AND INTERLOCK SCHEDULE
6 EQUIPMENT LAYOUT
7 MISCELLANEOUS DETAILS AND SECTIONS (1)
8 MISCELLANEOUS DETAILS AND SECTIONS (2)
9 MISCELLANEOUS DETAILS AND SECTIONS (3)
10 EXTRACTION & INJECTION WELL CONSTRUCTION DETAILS
11 INFILTRATION TRENCH DETAIL
12 FENCING AND WORK AREA DETAILS
13 SPECIFICATIONS
E01 ONE-LINE DIAGRAM
E02 ELECTRICAL EQUIPMENT LAYOUT
E03 ELECTRICAL SITE PLAN
E04 RISER DIAGRAM
E05 SIGNAL LIST

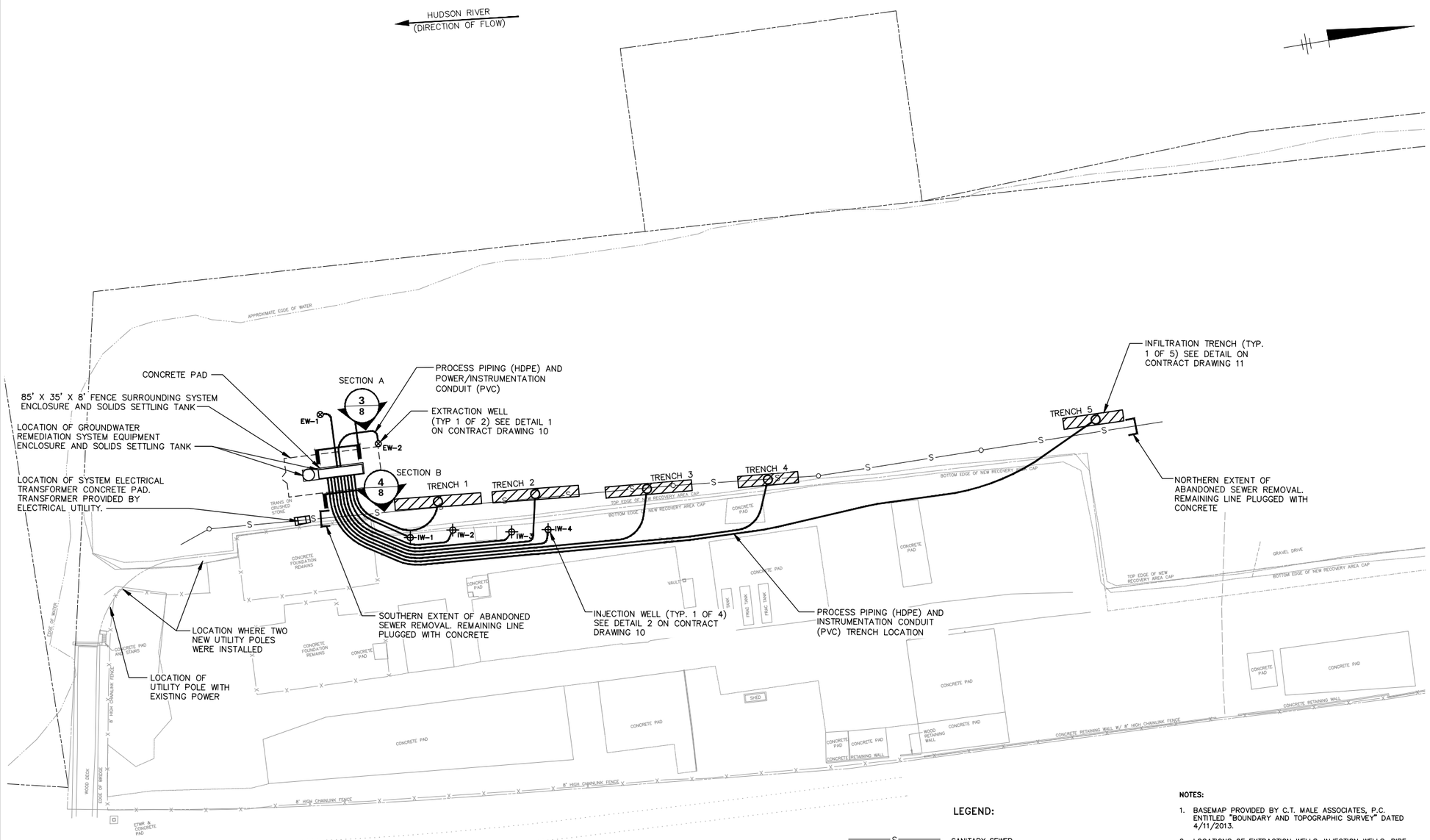

GENERAL CONSTRUCTION NOTES:

1. ALL WORK DESCRIBED IN THESE DRAWINGS/SPECIFICATIONS SHALL BE PERFORMED ON BEHALF OF CHEVRON ENVIRONMENTAL MANAGEMENT COMPANY.
2. SUBCONTRACTORS SHOULD VISIT THE SITE AND EXAMINE ALL OF THE PHYSICAL CONDITIONS THAT AFFECT THE FINAL BID PRICE.
3. SUBCONTRACTORS SHALL OBTAIN ALL NECESSARY FIELD MEASUREMENTS TO VERIFY THE ABILITY TO EXECUTE THE WORK IN ACCORDANCE WITH THIS SCOPE OF WORK AND DRAWINGS. NO ADDITIONS OR REVISIONS TO THE BID OR CONTRACT PRICE WILL BE PERMITTED BASED ON EXISTING CONDITIONS.
4. SUBCONTRACTORS SHALL PROVIDE ALL LABOR, MATERIAL, AND EQUIPMENT, UNLESS OTHERWISE STATED, NECESSARY TO PERFORM THIS WORK.
5. SUBCONTRACTORS SHALL BE RESPONSIBLE FOR OBTAINING ALL TRADE PERMITS, AND APPROVALS NECESSARY TO PERFORM THIS WORK.
6. ALL INFORMATION PRESENTED ON THESE DRAWINGS IS CONFIDENTIAL.
7. WHILE CONSTRUCTION ACTIVITIES ARE UNDER WAY AT LEAST ONE SUBCONTRACTOR, FOREMAN, OR CREW SUPERVISOR SHALL BE PRESENT AT THE JOB SITE AT ALL TIMES AND WILL BE DIRECTLY REPORTABLE TO THE ARCADIS CONSTRUCTION SUPERVISOR.
8. SUBCONTRACTORS ARE RESPONSIBLE FOR LOCATING AND VERIFYING LOCATION OF ALL UTILITIES WITHIN AREA AFFECTED BY CONSTRUCTION. COPIES OF PRINTS OBTAINED OR LOCATIONS PROVIDED TO CONTRACTOR WITH RESPECT TO UTILITIES SHALL BE SUPPLIED TO THE ENGINEER WITH A RECORD SET OF DRAWINGS AT COMPLETION OF CONSTRUCTION. IF A CONFLICT EXISTS BETWEEN THE UTILITY LOCATION AND THE CONSTRUCTION DRAWINGS, CONTRACTOR IS TO NOTIFY THE ENGINEER IMMEDIATELY SO THAT THE CONFLICT MAY BE RESOLVED.
9. SUBCONTRACTORS ARE RESPONSIBLE FOR PROVIDING THE ENGINEER WITH ALL INFORMATION REQUIRED TO COMPLETE A SET OF "RECORD" DRAWINGS BY KEEPING A RECORD SET OF DAILY PROGRESSION OF WORK.
10. UNLESS OTHERWISE NOTED, ALL AREAS DISTURBED BY THIS WORK SHALL BE RESTORED TO ORIGINAL CONDITION.
11. SUBCONTRACTOR SHALL PROTECT AND PRESERVE ALL EXISTING FEATURES (I.E. MONITORING WELLS, EQUIPMENT, ETC.) WITHIN AREAS AFFECTED BY CONSTRUCTION. DAMAGE SUSTAINED TO AN EXISTING FEATURE WILL BE REPAIRED/REPLACED AT SUBCONTRACTOR'S EXPENSE.
12. SUBCONTRACTOR SHALL PERFORM ALL WORK IN ACCORDANCE WITH ALL COUNTY, LOCAL, STATE, AND FEDERAL REGULATIONS, INCLUDING, BUT NOT LIMITED TO, ALL APPLICABLE LOCAL, STATE, AND/OR FEDERAL (OSHA, USEPA, AND DOT, ETC.) RULES AND REGULATIONS.
13. UNLESS OTHERWISE INDICATED HEREIN, ALL MATERIALS AND EQUIPMENT FURNISHED UNDER THIS CONTRACT SHALL BE NEW, FREE FROM DEFECTS, AND SHALL BE GUARANTEED FOR A PERIOD OF AT LEAST ONE YEAR FROM THE DATE OF ACCEPTANCE OF THE WORK. THE CONTRACTOR SHALL FURNISH, AT NO COST TO THE ENGINEER, ALL LABOR AND MATERIALS NECESSARY TO CORRECT PROBLEMS DUE TO FAULTY WORKMANSHIP OR MATERIALS.
14. OTHER CONSTRUCTION ACTIVITIES MAY BE TAKING PLACE CONCURRENTLY WITH THIS PROJECT. THE CONTRACTOR SHALL CONSULT WITH THE VARIOUS PARTIES AND SHALL COORDINATE SCHEDULES.
15. THE INFORMATION SHOWN ON THE DRAWINGS CONCERNING TYPE AND LOCATION OF UNDERGROUND UTILITIES IS NOT GUARANTEED TO BE ACCURATE OR ALL INCLUSIVE. THE SUBCONTRACTOR IS RESPONSIBLE FOR MAKING HIS OWN DETERMINATIONS AS TO THE TYPE AND LOCATION OF UNDERGROUND UTILITIES AS MAY BE NECESSARY TO AVOID DAMAGE THERETO.
16. PIPE ROUTING SHOWN FOR CONSTRUCTION LAYOUT PURPOSES ONLY. ACTUAL ROUTING TO BE FIELD DETERMINED AND IS SUBJECT TO ENGINEER'S APPROVAL.
17. ALL PIPING PRESSURE TESTS SHALL BE MADE BY THE SUBCONTRACTOR IN THE PRESENCE OF THE ENGINEER OR CONSTRUCTION SUPERVISOR. PIPE TESTING PROTOCOL TO BE PROVIDED UNDER SEPARATE COVER.
18. THE SUBCONTRACTOR SHALL PROVIDE ALL PRODUCTS AND PROPERLY CALIBRATED TESTING EQUIPMENT REQUIRED TO PERFORM THE PIPING PRESSURE TESTING WORK.
19. TESTS MAY BE PERFORMED ON SEPARATE SECTIONS OF PIPING TO EXPEDITE CONSTRUCTION. THE SUBCONTRACTOR SHALL NOT PERFORM PRESSURE TESTING AGAINST SYSTEM VALVES.
20. EXCAVATIONS SHALL BE KEPT FREE FROM STANDING WATER. WATER REMOVED FROM EXCAVATION SHALL BE PROPERLY TREATED IN ACCORDANCE WITH SPECIFICATIONS (PROVIDED UNDER SEPARATE COVER). ONCE TREATED EXCAVATION WATER IS PROVED TO BE WITHIN PERMIT REQUIREMENTS, TREATED EXCAVATION WATER SHALL BE DISCHARGED TO THE RIVER UNDER EXISTING DISCHARGE PERMIT.
21. SUBCONTRACTOR SHALL NOTIFY THE ENGINEER AT THE COMPLETION OF EXCAVATIONS AND TRENCHING TO ALLOW FOR INSPECTIONS.
22. SUBCONTRACTOR SHALL PROVIDE APPROPRIATE SAFETY BARRICADES AROUND TRENCHING AND EXCAVATION TO PREVENT ACCIDENTS OR UNAUTHORIZED ENTRY.
23. BACKFILL OF TRENCHES IN UNPAVED AREAS WILL BE APPLIED IN 1-FOOT COMPACTED LIFTS. BACKFILL OF TRENCHES IN DESIGNATED ROAD CROSSING AREAS SHALL BE APPLIED IN 6-INCH COMPACTED LIFTS SUCH THAT A 95% MODIFIED PROCTOR DENSITY SHALL BE ACHIEVED.
24. SUBCONTRACTOR'S FILL SOURCE MUST BE APPROVED BY THE ENGINEER PRIOR TO COMMENCING THE WORK AND/OR PLACING THE MATERIAL.
25. EXCAVATIONS WILL BE BACKFILLED AS PROMPTLY AS WORK PERMITS ONCE REQUIRED INSPECTIONS HAVE BEEN COMPLETED AND OTHER ASSOCIATED WORK HAS BEEN COMPLETED.
26. DO NOT PLACE MATERIALS ON SURFACES THAT ARE MUDDY, FROZEN, OR CONTAIN ICE OR FROST.
27. CONTRACTOR SHALL PLACE A STRIP(S) OF UTILITY WARNING TAPE SPACED AT 18 INCHES ON CENTER IN ALL TRENCHED AREAS. THIS TAPE SHALL CONTAIN A WIRE FOR METAL DETECTION OR HAVE AN ALUMINUM CORE. TAPE SHALL BE PLACED AT A DEPTH OF 6 INCHES IN NON-PAVED AREAS AND BELOW THE SUBBASE IN PAVED AREAS.
28. PAVED OR STONE DRIVE AREAS SHALL BE RESTORED TO ORIGINAL CONDITION. UNLESS OTHERWISE SPECIFIED BY ARCADIS.

LEGEND:

—S—	SANITARY SEWER
▨	APPROXIMATE LOCATION OF INFILTRATION TRENCH
IW-1 ⊕	INJECTION WELL
EW-1 ⊗	EXTRACTION WELL
—x—	EXISTING FENCE
[ ]	APPROXIMATE EXTENT OF ABANDONED SEWER REMOVAL

NOTES:

1. BASEMAP PROVIDED BY C.T. MALE ASSOCIATES, P.C. ENTITLED "BOUNDARY AND TOPOGRAPHIC SURVEY" DATED 4/11/2013.
2. LOCATIONS OF EXTRACTION WELLS, INJECTION WELLS, PIPE RUNS, AND INFILTRATION TRENCHES ARE APPROXIMATE. EXACT LOCATIONS TO BE FIELD DETERMINED AND ENGINEER APPROVED.
3. RAILROAD AVENUE ACCESS POINT RESTRICTED TO FOOT TRAFFIC.
4. ACCESS AND EGRESS TO/FROM THE SITE SHALL BE CONTROLLED THROUGH THE ACCESS GATE TO THE NORTH OF THE SITE.

RECORD DRAWINGS

TO THE BEST OF OUR KNOWLEDGE, INFORMATION AND BELIEF, THESE RECORD DRAWINGS SUBSTANTIALLY REPRESENT THE PROJECT AS CONSTRUCTED.

(RECORD DRAWING: MADE FROM DRAWING NO. 1, TRACER NO. B0046918/0001/00003/DWG/CONTRACT/46918G01.DWG, DATED 7/18/12) DATE_____BY_____

CITY: SYRACUSE, NY DIV/GROUP: ENV/CADD DB: GMS KFS GMS K.SARTORI PIC: J.VOGELEY PM: W.MCCUNE TM: J.ROBERTSON LYR:ON=*;OFF=*REF*
G:\ENVCAD\SYRACUSE\ACT\B0046918\0003\00005\DWG\CONTRACT\RECORD\46918G01.dwg LAYOUT: 1 SAVED: 7/11/2013 3:56 PM ACADVER: 18.1S(LMS TECH) PAGESETUP: DWG TO PDF PLOTSTYLETABLE: PLTCONT.CTB PLOTTED: 9/17/2013 9:08 AM BY: GETTS, BRIAN

XREFS: 46918X01 46918X00
IMAGES:

1"=50' 50' 0 50' 100'

THIS BAR REPRESENTS ONE INCH ON THE ORIGINAL DRAWING: USE TO VERIFY FIGURE REPRODUCTION SCALE

No.	Date	Revisions	By	Ckd

THIS DRAWING IS THE PROPERTY OF THE ARCADIS ENTITY IDENTIFIED IN THE TITLE BLOCK AND MAY NOT BE REUSED OR ALTERED IN WHOLE OR IN PART WITHOUT THE EXPRESS WRITTEN PERMISSION OF SAME.

Professional Engineer's Name: TIMOTHY E. MILLER
Professional Engineer's No.: 077919-1
State: NY | Date Signed: | Project Mgr.: WTM
Designed by: AMR | Drawn by: KLS | Checked by: TEM/AMR

ARCADIS
ARCADIS OF NEW YORK, INC.

FORMER TAPPAN TERMINAL SITE • HASTINGS ON HUDSON, NEW YORK
GROUNDWATER REMEDIATION SYSTEM

SITE PLAN

GENERAL

ARCADIS Project No. B0046918.0003.00005
Date SEPTEMBER 2013

ARCADIS
6723 TOWPATH RD
PO BOX 66
SYRACUSE, NY 13214-0066
TEL. 315.446.9120

1

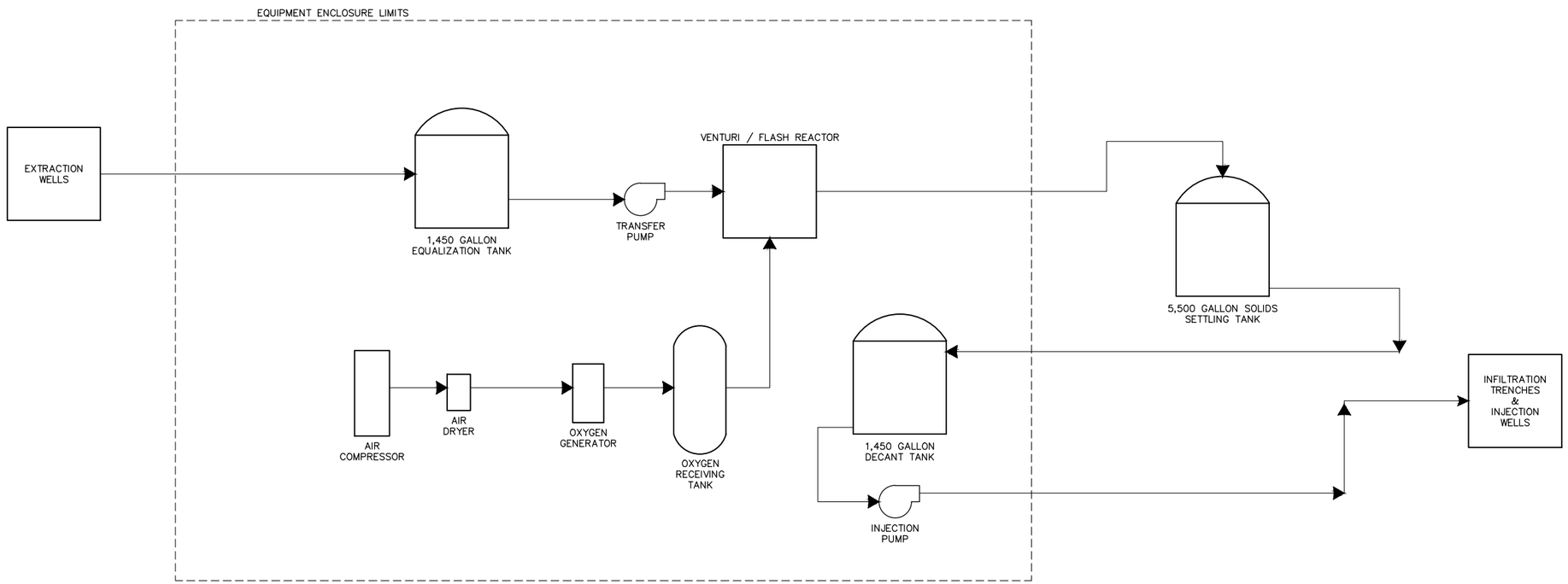

RECORD DRAWINGS
TO THE BEST OF OUR KNOWLEDGE, INFORMATION AND BELIEF, THESE RECORD DRAWINGS SUBSTANTIALLY REPRESENT THE PROJECT AS CONSTRUCTED.

(RECORD DRAWING: MADE FROM DRAWING NO. 1, TRACER NO. B0046918/0001/00003/DWG/CONTRACT/46918D02.DWG, DATED 7/18/12) DATE_____BY_____

No.	Date	Revisions	By	Ckd

THIS BAR REPRESENTS ONE INCH ON THE ORIGINAL DRAWING: USE TO VERIFY FIGURE REPRODUCTION SCALE

THIS DRAWING IS THE PROPERTY OF THE ARCADIS ENTITY IDENTIFIED IN THE TITLE BLOCK AND MAY NOT BE REUSED OR ALTERED IN WHOLE OR IN PART WITHOUT THE EXPRESS WRITTEN PERMISSION OF SAME.

Professional Engineer's Name: TIMOTHY E. MILLER
Professional Engineer's No.: 077919-1
State: NY | Date Signed: | Project Mgr.: WTM
Designed by: AMR | Drawn by: KLS | Checked by: TEM/AMR

ARCADIS
ARCADIS OF NEW YORK, INC.

FORMER TAPPAN TERMINAL SITE • HASTINGS ON HUDSON, NEW YORK
GROUNDWATER REMEDIATION SYSTEM

PROCESS FLOW DIAGRAM

GENERAL

ARCADIS Project No. B0046918.0003.00005
Date SEPTEMBER 2013

ARCADIS
6723 TOWPATH RD
PO BOX 66
SYRACUSE, NY 13214-0066
TEL. 315.446.9120

2

CITY: SYRACUSE, NY DIV/GROUP:ENV/CADD DB: GMS KFS GMS K.SARTORI PIC:M.FLEISCHNER PM: W.MCCUNE TM:J.ROBERTSON LYR:ON=*;OFF=*REF*
G:\ENVCAD\SYRACUSE\ACT\B0046918\0003\00005\DWG\CONTRACT\RECORD\46918D02.dwg LAYOUT: 2 SAVED: 7/9/2013 3:13 PM ACADVER: 18.1S (LMS TECH) PAGESETUP: DWG TO PDF PLOTSTYLETABLE: PLTCONT.CTB PLOTTED: 9/17/2013 9:08 AM BY: GETTS, BRIAN
XREFS: 46918X00 IMAGES:

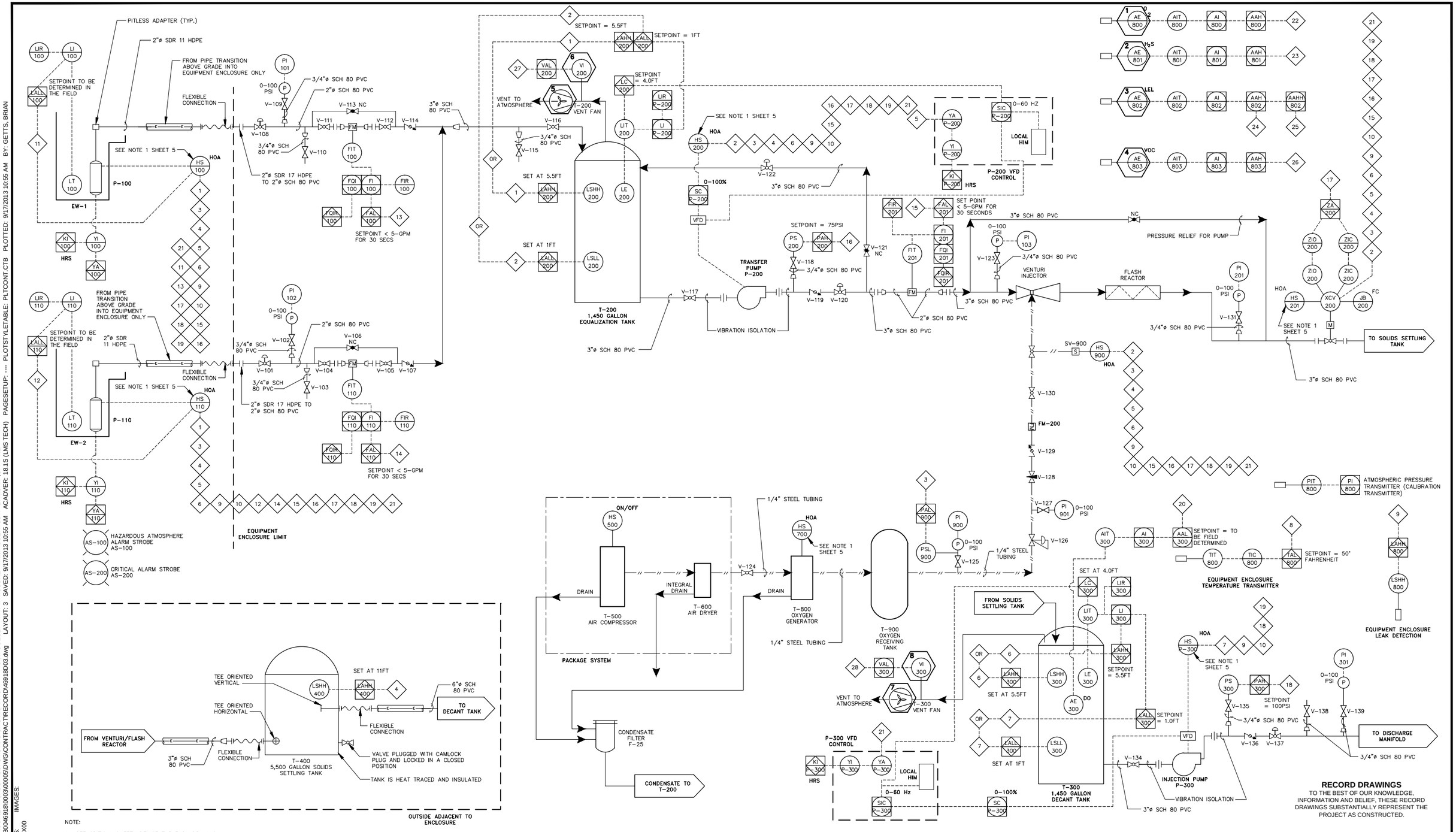

NOTE:

1. SEE CRITICAL SAFETY DEVICE TABLE ON DRAWING 4.

RECORD DRAWINGS
TO THE BEST OF OUR KNOWLEDGE, INFORMATION AND BELIEF, THESE RECORD DRAWINGS SUBSTANTIALLY REPRESENT THE PROJECT AS CONSTRUCTED.

(RECORD DRAWING: MADE FROM DRAWING NO. 1, TRACER NO. B0046918/0001/00003/DWG/CONTRACT/46918G01.DWG, DATED 7/18/12) DATE_____BY_____

No.	Date	Revisions	By	Ckd

THIS DRAWING IS THE PROPERTY OF THE ARCADIS ENTITY IDENTIFIED IN THE TITLE BLOCK AND MAY NOT BE REUSED OR ALTERED IN WHOLE OR IN PART WITHOUT THE EXPRESS WRITTEN PERMISSION OF SAME.

THIS BAR REPRESENTS ONE INCH ON THE ORIGINAL DRAWING: USE TO VERIFY FIGURE REPRODUCTION SCALE

Professional Engineer's Name: TIMOTHY E. MILLER
Professional Engineer's No.: 077919-1
State: NY | Date Signed | Project Mgr.: WTM
Designed by: AMR | Drawn by: KLS | Checked by: TEM/AMR

ARCADIS
ARCADIS OF NEW YORK, INC.

FORMER TAPPAN TERMINAL SITE • HASTINGS ON HUDSON, NEW YORK
GROUNDWATER REMEDIATION SYSTEM

PIPING AND INSTRUMENTATION DIAGRAM (1)

MECHANICAL

ARCADIS Project No. B0046918.0003.00005
Date SEPTEMBER 2013
ARCADIS 6723 TOWPATH RD PO BOX 66 SYRACUSE, NY 13214-0066 TEL. 315.446.9120

3

CITY: SYRACUSE, NY DIVGROUP:ENV/CADD DB: GMS KFS GMS K.SARTORI PIC:J.VOGELEY PM: W.MCCUNE TM:J.ROBERTSON LYR:ON=*;OFF=*REF*
G:\ENVCAD\SYRACUSE\ACT\B0046918\00030\005\DWG\CONTRACT\RECORD\46918D03.dwg LAYOUT: 3 SAVED: 9/17/2013 10:55 AM ACADVER: 18.1S (LMS TECH) PAGESETUP: ---- PLOTSTYLETABLE: PLTCONT.CTB PLOTTED: 9/17/2013 10:55 AM BY: GETTS, BRIAN
XREFS: 46918X00 IMAGES:

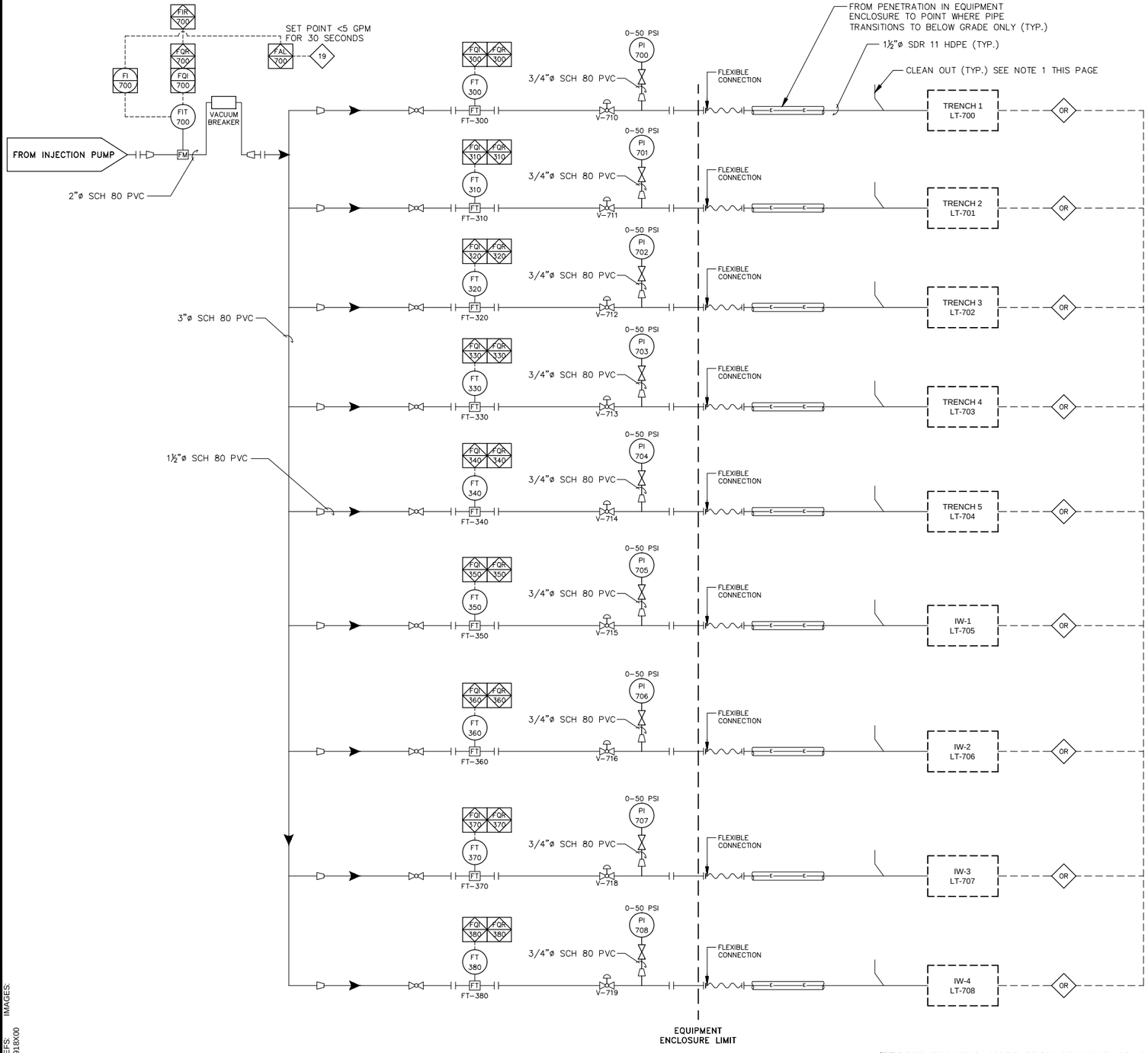

CRITICAL SAFETY DEVICES

1	CSD-1	AE-800: OXYGEN SENSOR : HIGH OXYGEN CONCENTRATION ENABLE EF-1, ENABLE HAZARDOUS ATMOSPHERE LIGHT, ENABLE CRITICAL ALARM LIGHT
2	CSD-2	AE-801: HYDROGEN SULFIDE SENSOR: HIGH HYDROGEN SULFIDE CONCENTRATION ENABLE EF-1, ENABLE HAZARDOUS ATMOSPHERE LIGHT
3	CSD-3	AE-802: LOWER EXPLOSIVE LIMIT SENSOR: HIGH LOWER EXPLOSIVE LIMIT CONCENTRATION ENABLE EF-1, ENABLE HAZARDOUS ATMOSPHERE LIGHT AE-802: LOWER EXPLOSIVE LIMIT SENSOR: HIGH HIGH LOWER EXPLOSIVE LIMIT CONCENTRATION DISABLE SYSTEM, ENABLE HAZARDOUS ATMOSPHERE LIGHT, ENABLE CRITICAL ALARM LIGHT
4	CSD-4	AE-803: VOLATILE ORGANIC COMPOUND SENSOR: HIGH VOLATILE ORGANIC COMPOUND CONCENTRATION ENABLE EF-1, ENABLE HAZARDOUS ATMOSPHERE LIGHT, ENABLE CRITICAL ALARM LIGHT
5	CSD-5	EF-200: T-200 VENT FAN DISABLE SYSTEM, ENABLE CRITICAL ALARM LIGHT
6	CSD-6	VI-200: T-200 VACUUM SWITCH DISABLE SYSTEM, ENABLE CRITICAL ALARM LIGHT
7	CSD-7	EF-300: T-300 VENT FAN DISABLE SYSTEM, ENABLE CRITICAL ALARM LIGHT
8	CSD-8	VI-300: T-300 VACUUM SWITCH DISABLE SYSTEM, ENABLE CRITICAL ALARM LIGHT

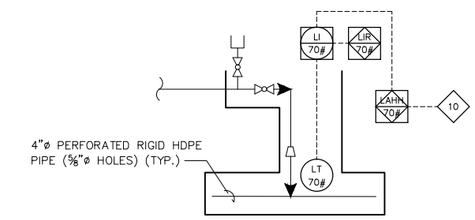

TYPICAL TRENCH DETAIL

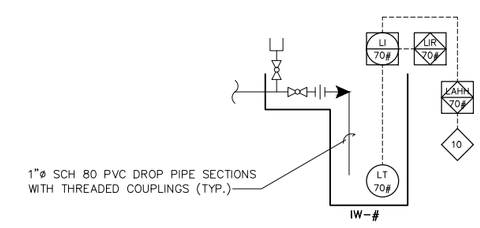

TYPICAL IW DETAIL

NOTE:

1. CLEAN OUTS WERE INSTALLED EVERY 100 FEET ALONG THE 1½"ø SDR 11 HDPE DISCHARGE PIPING TO EACH INJECTION WELL AND INJECTION TRENCH. A MINIMUM OF ONE CLEAN OUT WAS INSTALLED ON EACH DISCHARGE LINE. SEE DETAIL ON CONTRACT DRAWING 8.

RECORD DRAWINGS
TO THE BEST OF OUR KNOWLEDGE, INFORMATION AND BELIEF, THESE RECORD DRAWINGS SUBSTANTIALLY REPRESENT THE PROJECT AS CONSTRUCTED.

(RECORD DRAWING: MADE FROM DRAWING NO. 1, TRACER NO. B0046918/0001/00003/DWG/CONTRACT/46918D04.DWG, DATED 7/18/12) DATE_____BY_____

CITY: SYRACUSE, NY DIV/GROUP:ENV/CADD DB: GMS KFS GMS K.SARTORI PIC:J.VOGELEY PM: W.MCCUNE TM: J.ROBERTSON LYR:ON=*;OFF=*REF*
G:\ENVCAD\SYRACUSE\ACT\B0046918\0003\00005\DWG\CONTRACT\RECORD\46918D04.dwg LAYOUT: 4 SAVED: 7/22/2013 9:10 AM ACADVER: 18.1S (LMS TECH) PAGESETUP: DWG TO PDF PLOTSTYLETABLE: PLTCONT.CTB PLOTTED: 9/17/2013 9:09 AM BY: GETTS, BRIAN
XREFS: IMAGES:
46918X00

THIS BAR REPRESENTS ONE INCH ON THE ORIGINAL DRAWING: USE TO VERIFY FIGURE REPRODUCTION SCALE

No.	Date	Revisions	By	Ckd

THIS DRAWING IS THE PROPERTY OF THE ARCADIS ENTITY IDENTIFIED IN THE TITLE BLOCK AND MAY NOT BE REUSED OR ALTERED IN WHOLE OR IN PART WITHOUT THE EXPRESS WRITTEN PERMISSION OF SAME.

Professional Engineer's Name: TIMOTHY E. MILLER
Professional Engineer's No.: 077919-1
State: NY | Date Signed: | Project Mgr.: WTM
Designed by: AMR | Drawn by: KLS | Checked by: TEM/AMR

ARCADIS
ARCADIS OF NEW YORK, INC.

FORMER TAPPAN TERMINAL SITE • HASTINGS ON HUDSON, NEW YORK
GROUNDWATER REMEDIATION SYSTEM

PIPING AND INSTRUMENTATION DIAGRAM (2)

MECHANICAL

ARCADIS Project No. B0046918.0003.00005
Date SEPTEMBER 2013
ARCADIS
6723 TOWPATH RD
PO BOX 66
SYRACUSE, NY 13214-0066
TEL. 315.446.9120

4

LEGEND:

- ENCLOSURE/BUILDING LIMITS
- MAIN PROCESS PIPING
- INSTRUMENTATION SIGNAL
- OXYGEN PIPING/TUBING
- SKID MOUNTED OR PACKAGED EQUIPMENT
- BALL VALVE (NC)
- BALL VALVE (NO)
- CHECK VALVE
- SAMPLE TAP
- PI 101 — PRESSURE GAUGE
- GLOBE VALVE
- UNION/COUPLER
- FLANGE CONNECTION
- FLEXIBLE CONNECTION
- REDUCER
- FM — FLOW METER
- WELL PUMP
- INSULATION & HEAT TRACING
- SOLENOID VALVE
- NEEDLE VALVE
- PRESSURE REGULATOR
- CENTRIFUGAL PUMP
- FLASH REACTOR
- VENTURI INJECTOR
- PT 100 — FIELD MOUNTED INSTRUMENT
- HS 100 — INSTRUMENT ACCESSIBLE TO OPERATOR/ PRIMARY LOCATION
- LSL 100 — PLC FUNCTION/PRIMARY LOCATION
- LI 100 — SHARED DISPLAY/CONTROL ASSESSABLE TO OPERATOR/PRIMARY LOCATION
- AS-100 — ALARM STROBE
- 1 — MAIN PLC INTERLOCK
- FT — FLOW TOTALIZER
- MOTORIZED CONTROL VALVE
- VENT FAN
- FILTER
- 1 — CRITICAL SAFETY DEVICE

ABBREVIATIONS:

AAH	ANALYSIS ALARM HIGH	LIT	LEVEL INDICATING TRANSMITTER
AAHH	ANALYSIS ALARM HIGH HIGH	LT	LEVEL TRANSMITTER
AE	ANALYSIS ELEMENT	LSHH	LEVEL SWITCH HIGH HIGH
AIT	ANALYSIS INDICATING TRANSMITTER	LSLL	LEVEL SWITCH LOW LOW
AI	ANALYSIS INDICATOR	NC	NORMALLY CLOSED
AAL	ANALYSIS ALARM LOW	NO	NORMALLY OPEN
ø	DIAMETER	PAH	PRESSURE ALARM HIGH
CSD	CRITICAL SAFETY DEVICE	PAL	PRESSURE ALARM LOW
DO	DISSOLVED OXYGEN	PI	PRESSURE INDICATOR
EW	EXTRACTION WELL	PIT	PRESSURE INDICATING TRANSMITTER
FAL	FLOW ALARM LOW	PLC	PROGRAMMABLE LOGIC CONTROLLER
FC	FAIL CLOSED	PS	PRESSURE SWITCH
FI	FLOW INDICATOR	PSL	PRESSURE SWITCH LOW
FIR	FLOW INDICATING RECORDER	PSI	PRESSURE PER SQUARE INCH
FIT	FLOW INDICATING TRANSMITTER	PVC	POLYVINYL CHLORIDE
FM	FLOW METER	SIC	SPEED INDICATING CONTROLLER
FQI	FLOW TOTALIZING INDICATOR	SC	SPEED CONTROLLER
FQR	FLOW TOTAL RECORDER	SCH	SCHEDULE
FQIR	FLOW TOTAL INDICATOR RECORDER	SDR	STANDARD DIMENSION RATIO
FQS	FLOW TOTAL SWITCH	SIC	SPEED INDICATING CONTROLLER
FT	FLOW TOTALIZER	SV	SOLENOID VALVE
GPM	GALLONS PER MINUTE	TAL	TEMPERATURE ALARM LOW
H_2S	HYDROGEN SULFIDE	TIC	TEMPERATURE INDICATING CONTROLLER
HDPE	HIGH DENSITY POLYETHYLENE	TIT	TEMPERATURE INDICATING TRANSMITTER
HOA	HAND-OFF-AUTO	TYP	TYPICAL
HS	HAND SWITCH	VAL	VACUUM ALARM LOW
IW	INJECTION WELL	VFD	VARIABLE FREQUENCY DRIVE
JB	BACK-UP BATTERY POWER	VI	VACUUM INDICATOR
KI	PUMP RUN TIME INDICATOR	VOC	VOLATILE ORGANIC COMPOUND
LAH	LEVEL ALARM HIGH	XCV	MOTORIZED CONTROL VALVE
LAHH	LEVEL ALARM HIGH-HIGH	YA	RUN ALARM
LALL	LEVEL ALARM LOW-LOW	YI	RUN INDICATION
LC	LEVEL CONTROLLER	ZA	POSITION ALARM
LE	LEVEL ELEMENT	ZIC	POSITION INDICATOR CLOSED
LEL	LOWER EXPLOSIVE LIMIT	ZIO	POSITION INDICATOR OPEN
LI	LEVEL INDICATOR	ZSC	POSITION CLOSED
LIR	LEVEL INDICATING RECORDER	ZSO	POSITION OPEN

INTERLOCK SCHEDULE:

1. T-200 HIGH HIGH LEVEL ALARM (LAHH-200)
   DISABLE EXTRACTION WELL PUMP P-100
   DISABLE EXTRACTION WELL PUMP P-110
   ALARM AT PLC

2. T-200 LOW LOW LEVEL ALARM (LALL-200)
   DISABLE TRANSFER PUMP P-200
   CLOSE VALVE SV-900
   CLOSE VALVE XCV-200
   ALARM AT PLC

3. T-900 LOW PRESSURE ALARM (PAL-900)
   DISABLE TRANSFER PUMP P-200
   DISABLE EXTRACTION WELL PUMP P-100
   DISABLE EXTRACTION WELL PUMP P-110
   CLOSE VALVE SV-900
   CLOSE VALVE XCV-200
   ALARM AT PLC

4. T-400 HIGH HIGH LEVEL ALARM (LAHH-400)
   DISABLE TRANSFER PUMP P-200
   DISABLE EXTRACTION WELL PUMP P-100
   DISABLE EXTRACTION WELL PUMP P-110
   CLOSE VALVE SV-900
   CLOSE VALVE XCV-200
   ALARM AT PLC

5. P-200 VFD FAULT (YA-P-200)
   DISABLE EXTRACTION WELL PUMP P-100
   DISABLE EXTRACTION WELL PUMP P-110
   CLOSE VALVE SV-900
   CLOSE VALVE XCV-200
   ALARM AT PLC

6. T-300 HIGH HIGH LEVEL ALARM (LAHH-300)
   DISABLE TRANSFER PUMP P-200
   DISABLE EXTRACTION WELL PUMP P-100
   DISABLE EXTRACTION WELL PUMP P-110
   CLOSE VALVE SV-900
   CLOSE VALVE XCV-200
   ALARM AT PLC

7. T-300 LOW LOW LEVEL ALARM (LALL-300)
   DISABLE INJECTION PUMP P-300, ALARM AT PLC

8. EQUIPMENT ENCLOSURE LOW TEMPERATURE ALARM (TAL-800)
   ALARM AT PLC

9. EQUIPMENT ENCLOSURE LEAK DETECTION ALARM (LAHH-800)
   DISABLE TRANSFER PUMP P-200
   DISABLE EXTRACTION WELL PUMP P-100
   DISABLE EXTRACTION WELL PUMP P-110
   DISABLE INJECTION PUMP P-300
   CLOSE VALVE SV-900
   CLOSE VALVE XCV-200
   ALARM AT PLC

10. TRENCH AND INJECTION WELL HIGH HIGH LEVEL ALARM (LAHH-700, 701, 702, 703, 704, 705, 706, 707, 708)
    DISABLE TRANSFER PUMP P-200
    DISABLE EXTRACTION WELL PUMP P-100
    DISABLE EXTRACTION WELL PUMP P-110
    DISABLE INJECTION PUMP P-300
    CLOSE VALVE SV-900
    CLOSE VALVE XCV-200
    ALARM AT PLC

11. EW-1 LOW LOW LEVEL ALARM (LALL-100)
    DISABLE EXTRACTION WELL PUMP P-100
    ALARM AT PLC

12. EW-2 LOW LOW LEVEL ALARM (LALL-110)
    DISABLE EXTRACTION WELL PUMP P-110
    ALARM AT PLC

13. FIT-100 LOW FLOW ALARM (FAL-100)
    CONTROL DESCRIPTION: IF THE FLOW RATE IS LESS THEN 5 GPM FOR 30 SECONDS
    DISABLE EXTRACTION WELL PUMP P-100
    ALARM AT PLC

14. FIT-110 LOW FLOW ALARM (FAL-110)
    CONTROL DESCRIPTION: IF THE FLOW RATE IS LESS THAN 5 GPM FOR 30 SECONDS
    DISABLE EXTRACTION WELL PUMP P-110
    ALARM AT PLC

15. FIT-201 LOW FLOW ALARM (FAL-201)
    CONTROL DESCRIPTION: IF THE FLOW RATE IS LESS THAN 5 GPM FOR 30 SECONDS
    DISABLE TRANSFER PUMP P-200
    DISABLE EXTRACTION WELL PUMP P-100
    DISABLE EXTRACTION WELL PUMP P-110
    CLOSE VALVE SV-900
    CLOSE VALVE XCV-200
    ALARM AT PLC

16. TRANSFER PUMP P-200 DISCHARGE, HIGH PRESSURE ALARM (PAH 200)
    SET POINT: 75 PSI
    DISABLE TRANSFER PUMP P-200
    DISABLE EXTRACTION WELL PUMP P-100
    DISABLE EXTRACTION WELL PUMP P-110
    CLOSE VALVE SV-900
    CLOSE VALVE XCV-200
    ALARM AT PLC

17. SOLIDS SETTLING TANK INFLUENT MOTORIZED VALVE (XCV-200)
    DISCORD ALARM, VALVE FAILED TO OPEN OR CLOSE (ZA-200)
    DISABLE TRANSFER PUMP P-200
    DISABLE EXTRACTION WELL PUMP P-100
    DISABLE EXTRACTION WELL PUMP P-110
    CLOSE VALVE SV-900
    CLOSE VALVE XCV-200
    ALARM AT PLC

18. INJECTION PUMP P-300 DISCHARGE, HIGH PRESSURE ALARM (PAH-300)
    SET POINT: 100 PSI
    DISABLE INJECTION PUMP P-300
    DISABLE TRANSFER PUMP P-200
    DISABLE EXTRACTION WELL PUMP P-100
    DISABLE EXTRACTION WELL PUMP P-110
    CLOSE VALVE SV-900
    CLOSE VALVE XCV-200
    ALARM AT PLC

19. FIT-700 LOW FLOW ALARM (FAL-700)
    CONTROL DESCRIPTION: IF THE FLOW RATE IS LESS THAN 5 GPM FOR 30 SECONDS
    DISABLE INJECTION PUMP P-300
    DISABLE TRANSFER PUMP P-200
    DISABLE EXTRACTION WELL PUMP P-100
    DISABLE EXTRACTION WELL PUMP P-110
    CLOSE VALVE SV-900
    CLOSE VALVE XCV-200
    ALARM AT PLC

20. AIT-300 LOW DO ALARM (AAL-300)
    CONTROL DESCRIPTION: IF THE DISSOLVED OXYGEN CONCENTRATION IS LESS THAN THE FIELD DETERMINED SETPOINT FOR 30 SECONDS.
    ALARM AT PLC

21. P-300 VFD FAULT (YA-P-300)
    DISABLE EXTRACTION WELL PUMP P-100
    DISABLE EXTRACTION WELL PUMP P-110
    DISABLE TRANSFER PUMP P-200
    CLOSE VALVE SV-900
    CLOSE VALVE XCV-200
    ALARM AT PLC

22. HIGH OXYGEN CONCENTRATION IN EQUIPMENT ENCLOSURE (AAH-800)
    TURN ON EXHAUST FAN EF-1
    ALARM AT PLC
    TURN ON HAZARDOUS ATMOSPHERE ALARM STROBE AS-100
    TURN ON CRITICAL ALARM STROBE AS-200

23. HIGH HYDROGEN SULFIDE CONCENTRATION IN EQUIPMENT ENCLOSURE (AAH-801)
    TURN ON EXHAUST FAN EF-1
    ALARM AT PLC
    TURN ON HAZARDOUS ATMOSPHERE ALARM STROBE AS-100

24. HIGH LOWER EXPLOSIVE LIMIT CONCENTRATION IN EQUIPMENT ENCLOSURE (AAH-802)
    TURN ON EXHAUST FAN EF-1
    ALARM AT PLC
    TURN ON HAZARDOUS ATMOSPHERE ALARM STROBE AS-100

25. HIGH HIGH LOWER EXPLOSIVE LIMIT CONCENTRATION IN EQUIPMENT ENCLOSURE (AAHH-802)
    DISABLE INJECTION PUMP P-300
    DISABLE TRANSFER PUMP P-200
    DISABLE EXTRACTION WELL PUMP P-100
    DISABLE EXTRACTION WELL PUMP P-110
    CLOSE VALVE SV-900
    CLOSE VALVE XCV-200
    ALARM AT PLC
    TURN ON HAZARDOUS ATMOSPHERE ALARM STROBE AS-100
    TURN ON CRITICAL ALARM STROBE AS-200

26. HIGH VOLATILE ORGANIC COMPOUND CONCENTRATION IN EQUIPMENT ENCLOSURE (AAH-803)
    TURN ON EXHAUST FAN EF-1
    ALARM AT PLC
    TURN ON HAZARDOUS ATMOSPHERE ALARM STROBE AS-100

27. LOW VACUUM ALARM AT T-200 (VAL-200)
    DISABLE INJECTION PUMP P-300
    DISABLE TRANSFER PUMP P-200
    DISABLE EXTRACTION WELL PUMP P-100
    DISABLE EXTRACTION WELL PUMP P-110
    CLOSE VALVE SV-900
    CLOSE VALVE XCV-200
    ALARM AT PLC
    TURN ON EXHAUST FAN EF-1
    TURN ON CRITICAL ALARM STROBE AS-200

28. LOW VACUUM ALARM AT T-300 (VAL-300)
    DISABLE INJECTION PUMP P-300
    DISABLE TRANSFER PUMP P-200
    DISABLE EXTRACTION WELL PUMP P-100
    DISABLE EXTRACTION WELL PUMP P-110
    CLOSE VALVE SV-900
    CLOSE VALVE XCV-200
    ALARM AT PLC
    TURN ON EXHAUST FAN EF-1
    TURN ON CRITICAL ALARM STROBE AS-200

NOTE:

1. HAND/OFF/AUTO (HOA) SHALL BE CONTROLLED FROM LOCAL CONTROL PANEL HMI. HOA SHALL BE A VIRTUAL SWITCH ON THE HMI TOUCH SCREEN.

RECORD DRAWINGS
TO THE BEST OF OUR KNOWLEDGE, INFORMATION AND BELIEF, THESE RECORD DRAWINGS SUBSTANTIALLY REPRESENT THE PROJECT AS CONSTRUCTED.

(RECORD DRAWING: MADE FROM DRAWING NO. 1, TRACER NO. B0046918/0001/00003/DWG/CONTRACT/46918D05.DWG, DATED 7/18/12) DATE_____BY_____

CITY: SYRACUSE, NY DIV/GROUP:ENV/CADD DB: GMS KFS GMS K.SARTORI PIC:J.VOGELEY PM: W.MCCUNE TM: W.MCCUNE LYR:ON=*;OFF=*REF*
G:\ENVCAD\SYRACUSE\ACT\B0046918\00003\00005\DWG\CONTRACT\RECORD\46918D05.dwg LAYOUT: 5 SAVED: 9/17/2013 8:21 AM ACADVER: 18.1S (LMS TECH) PAGESETUP: ---- PLOTSTYLETABLE: PLTCONT.CTB PLOTTED: 9/17/2013 10:54 AM BY: GETTS, BRIAN
XREFS: 46918X00 IMAGES:

THIS BAR REPRESENTS ONE INCH ON THE ORIGINAL DRAWING: USE TO VERIFY FIGURE REPRODUCTION SCALE

No.	Date	Revisions	By	Ckd

THIS DRAWING IS THE PROPERTY OF THE ARCADIS ENTITY IDENTIFIED IN THE TITLE BLOCK AND MAY NOT BE REUSED OR ALTERED IN WHOLE OR IN PART WITHOUT THE EXPRESS WRITTEN PERMISSION OF SAME.

Professional Engineer's Name: TIMOTHY E. MILLER
Professional Engineer's No.: 077919-1
State: NY | Date Signed: | Project Mgr.: WTM
Designed by: AMR | Drawn by: KLS | Checked by: TEM/AMR

ARCADIS
ARCADIS OF NEW YORK, INC.

FORMER TAPPAN TERMINAL SITE • HASTINGS ON HUDSON, NEW YORK
GROUNDWATER REMEDIATION SYSTEM

LEGEND, ABBREVIATIONS AND INTERLOCK SCHEDULE

MECHANICAL

ARCADIS Project No. B0046918.0003.00005
Date SEPTEMBER 2013
ARCADIS
6723 TOWPATH RD
PO BOX 66
SYRACUSE, NY 13214-0066
TEL. 315.446.9120

5

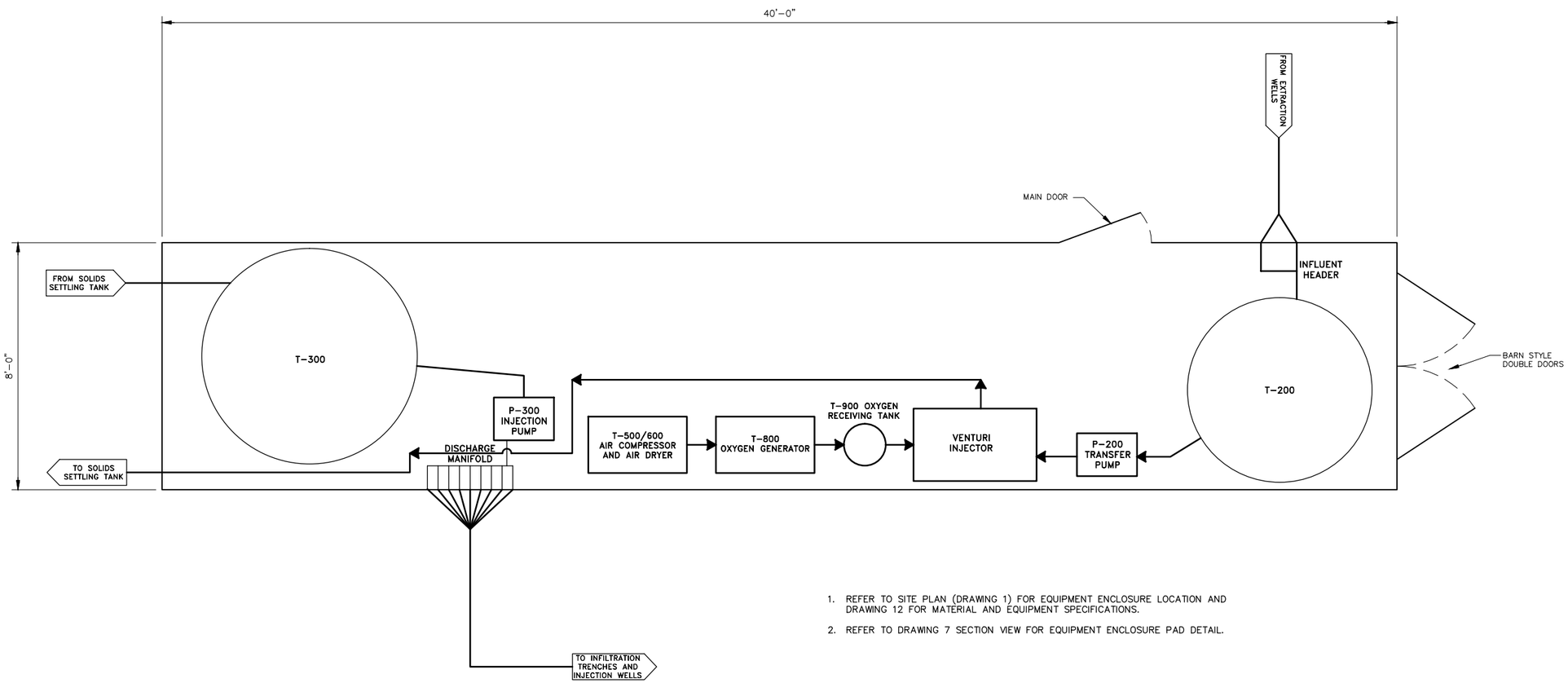

1. REFER TO SITE PLAN (DRAWING 1) FOR EQUIPMENT ENCLOSURE LOCATION AND DRAWING 12 FOR MATERIAL AND EQUIPMENT SPECIFICATIONS.
2. REFER TO DRAWING 7 SECTION VIEW FOR EQUIPMENT ENCLOSURE PAD DETAIL.

RECORD DRAWINGS
TO THE BEST OF OUR KNOWLEDGE, INFORMATION AND BELIEF, THESE RECORD DRAWINGS SUBSTANTIALLY REPRESENT THE PROJECT AS CONSTRUCTED.

(RECORD DRAWING: MADE FROM DRAWING NO. 1, TRACER NO. B0046918/0001/00003/DWG/CONTRACT/46918G06.DWG, DATED 7/18/12) DATE_____BY_____

NOT TO SCALE

THIS BAR REPRESENTS ONE INCH ON THE ORIGINAL DRAWING: USE TO VERIFY FIGURE REPRODUCTION SCALE

No.	Date	Revisions	By	Ckd

THIS DRAWING IS THE PROPERTY OF THE ARCADIS ENTITY IDENTIFIED IN THE TITLE BLOCK AND MAY NOT BE REUSED OR ALTERED IN WHOLE OR IN PART WITHOUT THE EXPRESS WRITTEN PERMISSION OF SAME.

Professional Engineer's Name: TIMOTHY E. MILLER
Professional Engineer's No.: 077919-1
State: NY | Date Signed: | Project Mgr.: WTM
Designed by: AMR | Drawn by: KLS | Checked by: TEM/AMR

ARCADIS
ARCADIS OF NEW YORK, INC.

FORMER TAPPAN TERMINAL SITE • HASTINGS ON HUDSON, NEW YORK
GROUNDWATER REMEDIATION SYSTEM

EQUIPMENT LAYOUT

MECHANICAL

ARCADIS Project No. B0046918.0003.00005
Date SEPTEMBER 2013

ARCADIS
6723 TOWPATH RD
PO BOX 66
SYRACUSE, NY 13214-0066
TEL. 315.446.9120

6

CITY: SYRACUSE, NY DIV/GROUP:ENV/CADD DB: GMS KFS GMS K.SARTORI PIC:J.VOGELEY PM: W.MCCUNE TM: J.ROBERTSON LYR:ON=*;OFF=*REF*
G:\ENVCAD\SYRACUSE\ACT\B0046918\0003\00005\DWG\CONTRACT\RECORD\46918G06.dwg LAYOUT: 6 SAVED: 7/9/2013 4:40 PM ACADVER: 18.1S (LMS TECH) PAGESETUP: DWG TO PDF PLOTSTYLETABLE: PLTCONT.CTB PLOTTED: 9/17/2013 9:09 AM BY: GETTS, BRIAN (LMS TECH)
XREFS: 46918X00 46918X02
IMAGES:

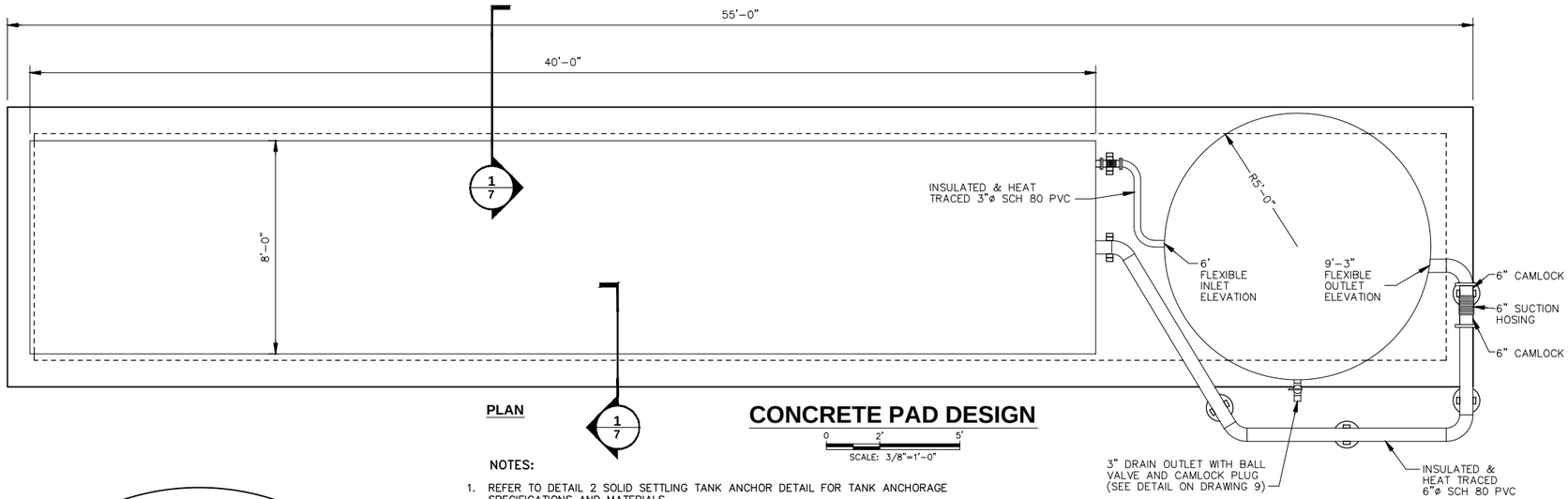

PLAN

CONCRETE PAD DESIGN

0 2' 5'
SCALE: 3/8"=1'-0"

NOTES:

1. REFER TO DETAIL 2 SOLID SETTLING TANK ANCHOR DETAIL FOR TANK ANCHORAGE SPECIFICATIONS AND MATERIALS.
2. EXTERIOR PVC PIPE BETWEEN EQUIPMENT ENCLOSURE AND SOLIDS SETTLING TANK SHALL BE SUPPORTED EVERY 5-FEET ON CENTER. (SEE DETAIL 4 ON SHEET 9)
3. SOLIDS SETTLING TANK GRAVITY DRAIN DISCHARGE PIPE SHALL BE PITCHED UNIFORMLY FROM THE SOLIDS SETTLING TANK OUTLET, INTO THE EQUIPMENT ENCLOSURE, INTO THE TOP OF DECANT TANK T-300. PITCH ON PIPE IS SHOWN FOR CLARITY, ACTUAL PITCH WILL BE DETERMINED IN THE FIELD.

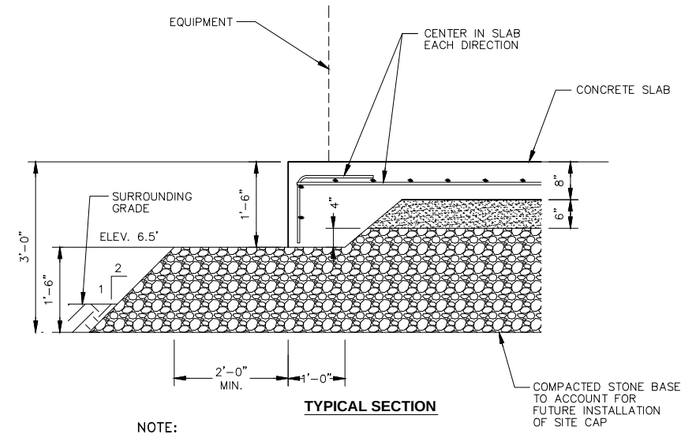

TYPICAL SECTION

NOTE:

1. SEE CONCRETE EQUIPMENT PAD SPECIFICATIONS ON DRAWING 12.

CONCRETE EQUIPMENT PAD DETAIL (1)

0 1' 2'
SCALE: 3/4"=1'-0"

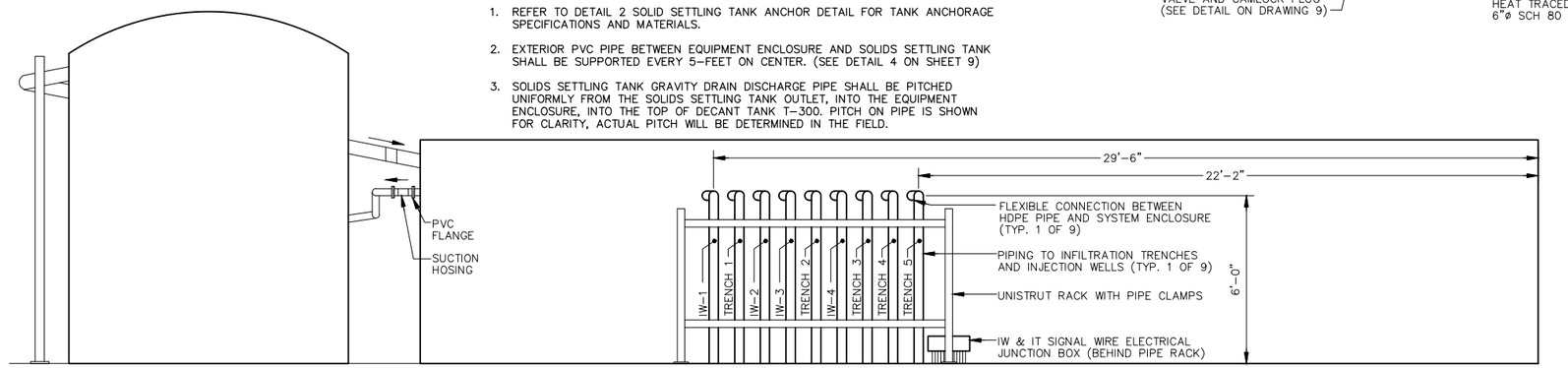

ELEVATION DETAIL (EAST SIDE)

0 2' 5'
SCALE: 3/8"=1'-0"

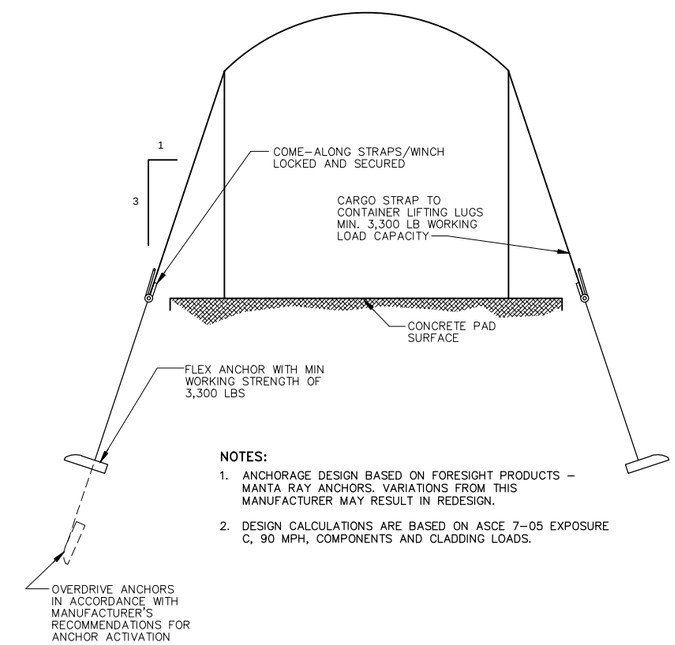

NOTES:

1. ANCHORAGE DESIGN BASED ON FORESIGHT PRODUCTS – MANTA RAY ANCHORS. VARIATIONS FROM THIS MANUFACTURER MAY RESULT IN REDESIGN.
2. DESIGN CALCULATIONS ARE BASED ON ASCE 7-05 EXPOSURE C, 90 MPH, COMPONENTS AND CLADDING LOADS.

SOLIDS SETTLING TANK ANCHOR DETAIL (2)

NOT TO SCALE

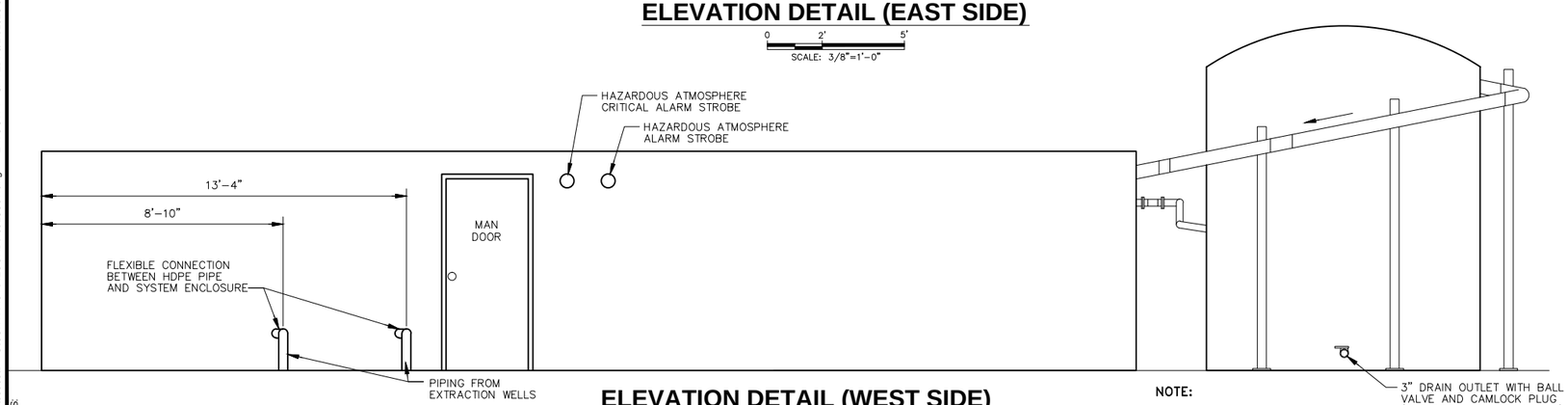

ELEVATION DETAIL (WEST SIDE)

0 2' 5'
SCALE: 3/8"=1'-0"

NOTE:

1. REFER TO DETAIL 2 SOLID SETTLING TANK ANCHOR DETAIL FOR TANK ANCHORAGE SPECIFICATIONS AND MATERIALS.

NOTE:

ELECTRICAL FROM EW-1 AND EW-2 COMBINED IN HA-1. LOW VOLTAGE PRESSURE TRANSDUCER WIRES FROM EW-1 AND EW-2 COMBINED IN HA-1 TO PENETRATE SYSTEM ENCLOSURE.

RECORD DRAWINGS
TO THE BEST OF OUR KNOWLEDGE, INFORMATION AND BELIEF, THESE RECORD DRAWINGS SUBSTANTIALLY REPRESENT THE PROJECT AS CONSTRUCTED.

(RECORD DRAWING: MADE FROM DRAWING NO. 1, TRACER NO. B0046918/0001/00003/DWG/CONTRACT/46918G07.DWG, DATED 7/18/12) DATE_____BY_____

SCALE AS INDICATED

THIS BAR REPRESENTS ONE INCH ON THE ORIGINAL DRAWING: USE TO VERIFY FIGURE REPRODUCTION SCALE

No.	Date	Revisions	By	Ckd

THIS DRAWING IS THE PROPERTY OF THE ARCADIS ENTITY IDENTIFIED IN THE TITLE BLOCK AND MAY NOT BE REUSED OR ALTERED IN WHOLE OR IN PART WITHOUT THE EXPRESS WRITTEN PERMISSION OF SAME.

Professional Engineer's Name: TIMOTHY E. MILLER
Professional Engineer's No.: 077919-1
State: NY | Date Signed: | Project Mgr.: WTM
Designed by: AMR | Drawn by: KLS | Checked by: TEM/AMR

ARCADIS
ARCADIS OF NEW YORK, INC.

FORMER TAPPAN TERMINAL SITE • HASTINGS ON HUDSON, NEW YORK
GROUNDWATER REMEDIATION SYSTEM

MISCELLANEOUS DETAILS AND SECTIONS (1)

MECHANICAL

ARCADIS Project No. B0046918.0003.00005
Date SEPTEMBER 2013

ARCADIS
6723 TOWPATH RD
PO BOX 66
SYRACUSE, NY 13214-0066
TEL. 315.446.9120

7

CITY: SYRACUSE, NY DIV/GROUP: ENV/CADD DB: GMS KFS GMS K.SARTORI PIC: J.VOGELEY PM: W.MCCUNE TM: J.ROBERTSON LYR:ON=*;OFF=*REF* PAGESETUP: DWG TO PDF PLOTSTYLETABLE: PLTCONT.CTB PLOTTED: 9/17/2013 9:09 AM BY: GETTS, BRIAN
G:\ENVCAD\SYRACUSE\ACT\B0046918\0003\00005\DWG\CONTRACT\RECORD\46918G07.dwg LAYOUT: 7 SAVED: 9/17/2013 9:00 AM ACADVER: 18.1S (LMS TECH)
XREFS: 46918X00 IMAGES:

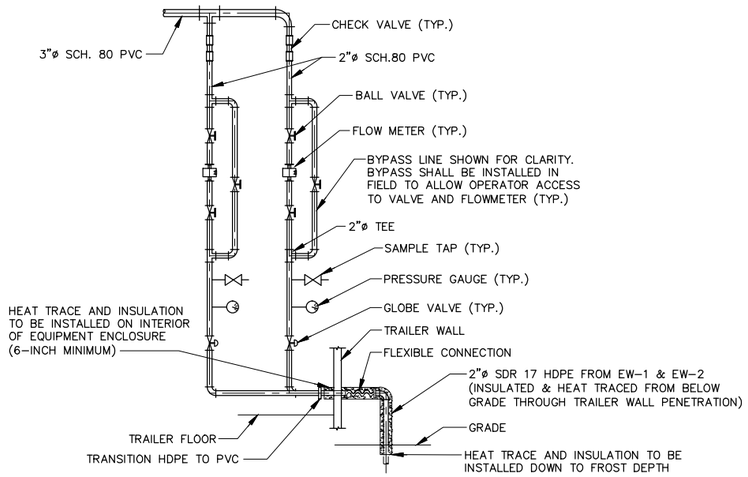

INFLUENT PIPE PROFILE (2)

0 2' 5'
SCALE: 3/8"=1'-0"

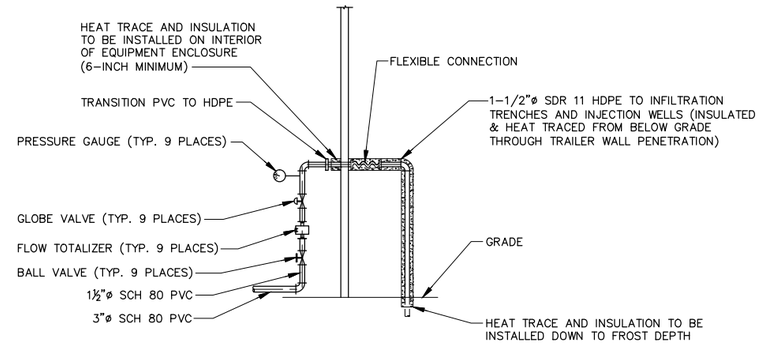

DISCHARGE MANIFOLD PROFILE (5)

0 2' 5'
SCALE: 3/8"=1'-0"

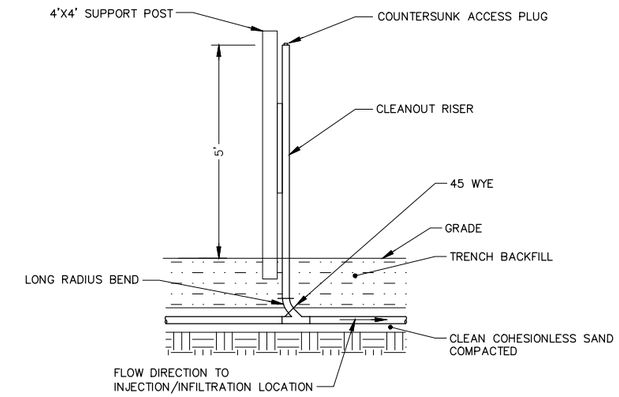

NOTE:

1. CLEAN OUTS SHALL BE INSTALLED EVERY 100 FEET ALONG THE 1-1/2"ø SDR 11 HDPE DISCHARGE PIPING TO EACH INJECTION WELL AND INJECTION TRENCH. A MINIMUM OF ONE CLEAN OUT SHALL BE INSTALLED ON EACH DISCHARGE LINE.

DISCHARGE PIPING CLEANOUT DETAIL (6)

NOT TO SCALE

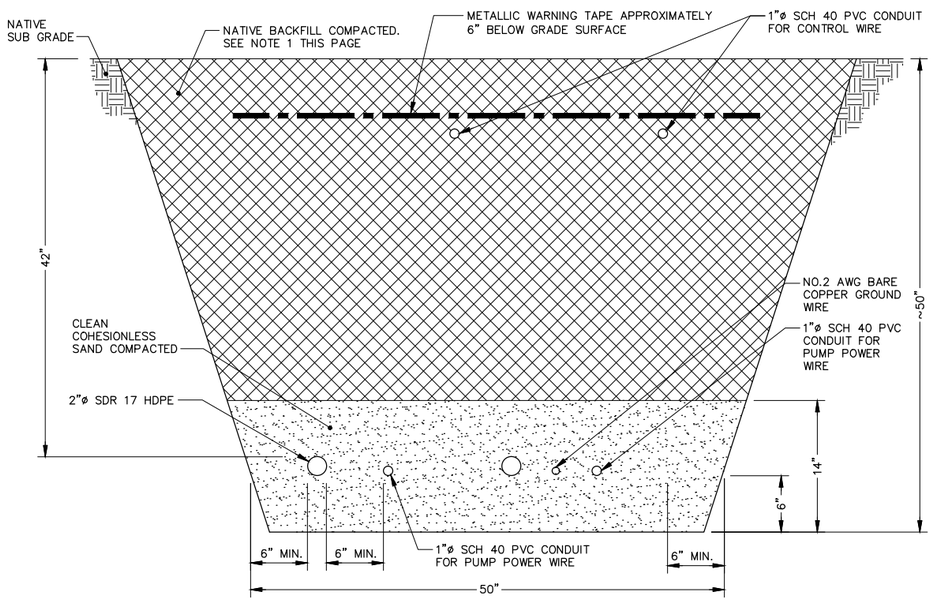

EXTRACTION WELL PIPE TRENCH DETAIL SECTION A (3)

0 6" 1'
SCALE: 1 1/2"=1'-0"

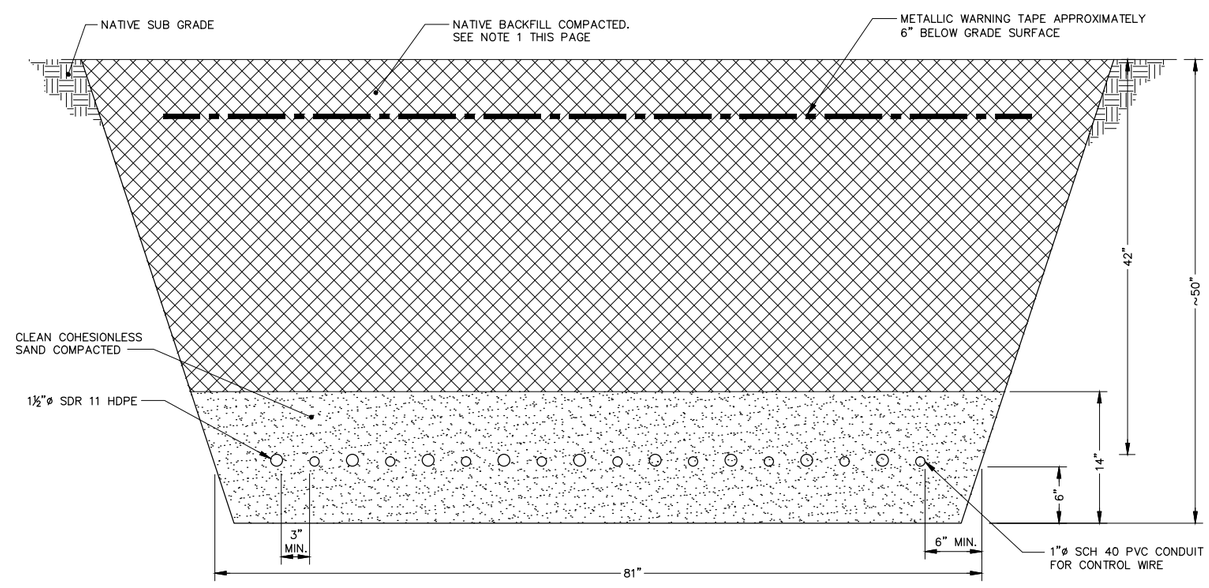

INFILTRATION TRENCH AND INJECTION WELL PIPE TRENCH DETAIL SECTION B (4)

0 6" 1'
SCALE: 1 1/2"=1'-0"

NOTE:

1. THE USE OF EXCAVATED MATERIALS AS BACKFILL IS SUBJECT TO ARCADIS APPROVAL AND SOIL SAMPLING RESULTS. BASED ON SOIL SAMPLING RESULTS, AN ALTERNATIVE BACKFILL SOURCE MAY BE REQUIRED. REFER TO GENERAL CONSTRUCTION NOTE 24 ON DRAWING 1.

RECORD DRAWINGS
TO THE BEST OF OUR KNOWLEDGE, INFORMATION AND BELIEF, THESE RECORD DRAWINGS SUBSTANTIALLY REPRESENT THE PROJECT AS CONSTRUCTED.

(RECORD DRAWING: MADE FROM DRAWING NO. 1, TRACER NO. B0046918/0001/00003/DWG/CONTRACT/46918G08.DWG, DATED 7/18/12) DATE_____BY_____

SCALE AS INDICATED

THIS BAR REPRESENTS ONE INCH ON THE ORIGINAL DRAWING: USE TO VERIFY FIGURE REPRODUCTION SCALE

No.	Date	Revisions	By	Ckd

THIS DRAWING IS THE PROPERTY OF THE ARCADIS ENTITY IDENTIFIED IN THE TITLE BLOCK AND MAY NOT BE REUSED OR ALTERED IN WHOLE OR IN PART WITHOUT THE EXPRESS WRITTEN PERMISSION OF SAME.

Professional Engineer's Name: TIMOTHY E. MILLER
Professional Engineer's No.: 077919-1
State: NY | Date Signed: | Project Mgr.: WTM
Designed by: AMR | Drawn by: KLS | Checked by: TEM/AMR

ARCADIS
ARCADIS OF NEW YORK, INC.

FORMER TAPPAN TERMINAL SITE • HASTINGS ON HUDSON, NEW YORK
GROUNDWATER REMEDIATION SYSTEM

MISCELLANEOUS DETAILS AND SECTIONS (2)

MECHANICAL

ARCADIS Project No. B0046918.0003.00005
Date SEPTEMBER 2013
ARCADIS
6723 TOWPATH RD
PO BOX 66
SYRACUSE, NY 13214-0066
TEL. 315.446.9120

8

CITY: SYRACUSE, NY DIV/GROUP:ENV/CADD DB: GMS KFS GMS K.SARTORI PIC:J.VOGELEY PM: W.MCCUNE TM: J. ROBERTSON LYR:ON=*;OFF=*REF*
G:\ENVCAD\SYRACUSE\ACT\B0046918\0003\00005\DWG\CONTRACT\RECORD\46918G08.dwg LAYOUT: 8 SAVED: 7/9/2013 5:07 PM ACADVER: 18.1S (LMS TECH) PAGESETUP: DWG TO PDF PLOTSTYLETABLE: PLTCONT.CTB PLOTTED: 9/17/2013 9:09 AM BY: GETTS, BRIAN
XREFS: 46918X00 IMAGES:

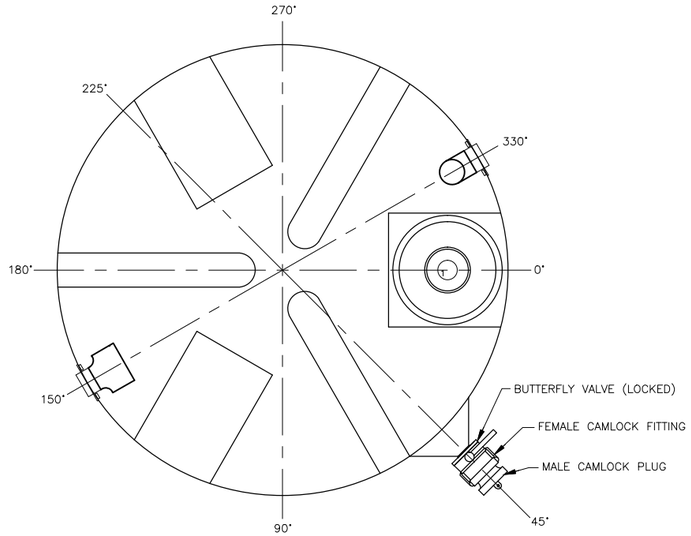

PLAN

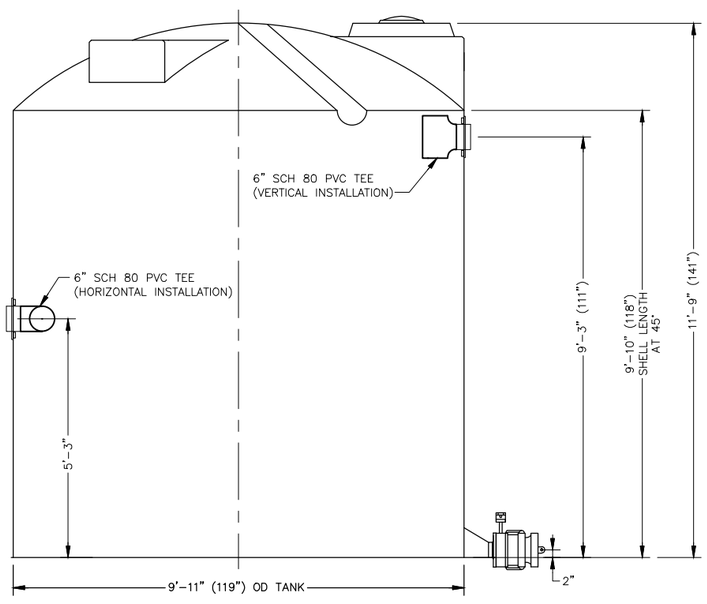

SECTION

SOLIDS SETTLING TANK (1)

NOT TO SCALE

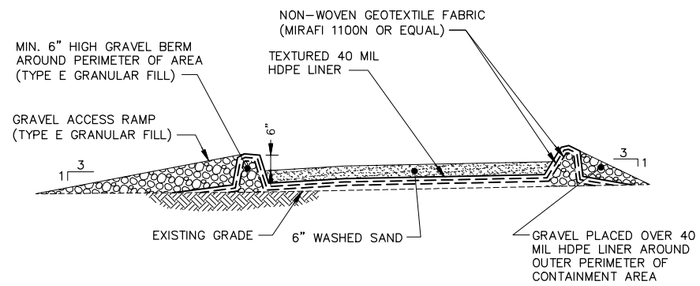

CONTAINMENT SECTION

TYPICAL CONTAINMENT AREA DETAIL (2)

NOT TO SCALE

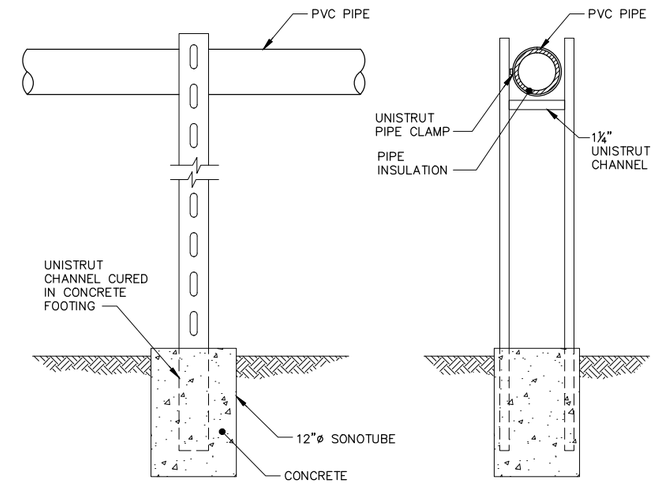

PIPE SUPPORT DETAIL (4)

NOT TO SCALE

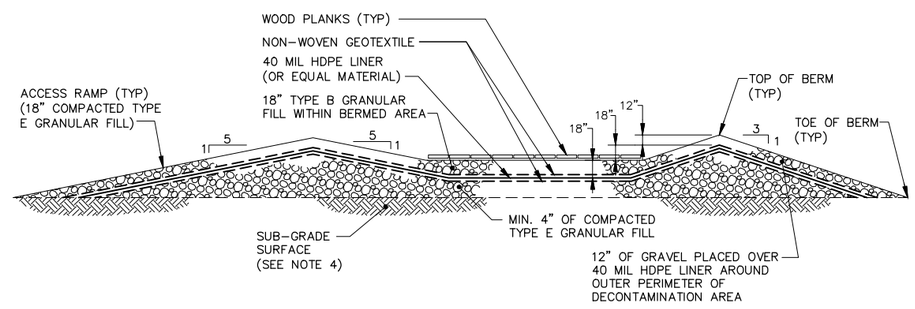

SECTION

DECONTAMINATION AREA (3)

NOT TO SCALE

NOTES:

1. CONTAINMENT AND DECONTAMINATION AREA TO BE SLOPED (INCLUDES HDPE LINER) TOWARD A COLLECTION SUMP TO FACILITATE COLLECTION AND REMOVAL OF LIQUIDS. LIQUIDS SHALL BE PUMPED FROM COLLECTION SUMP TO A HOLDING TANK.
2. UPON COMPLETION OF CONSTRUCTION ACTIVITIES, THE CONTAINMENT AND DECONTAMINATION AREAS, INCLUDING GEOSYNTHETICS, SHALL BE REMOVED BY THE CONTRACTOR FOR OFFSITE DISPOSAL.
3. SUB-GRADE SURFACE SHALL BE UNIFORM AND FREE OF DELETERIOUS MATERIALS (E.G., SHARP STONES, WOODY DEBRIS, CONSTRUCTION DEBRIS) THAT COULD DAMAGE THE HDPE LINER.
4. COMPACTION OF GRANULAR FILL MATERIAL SHALL BE SUFFICIENT DENSITY TO PROVIDE A FIRM AND UNIFORM SURFACE. COMPACTION OF FILL MATERIAL ABOVE GEOSYNTHETICS TO BE PERFORMED IN A MANNER AND USING APPROPRIATE EQUIPMENT THAT AVOIDS DAMAGING THE GEOSYNTHETICS.
5. TRUCKS OR OTHER EQUIPMENT THAT COULD DAMAGE THE HDPE LINER WILL NOT BE ALLOWED WITHIN THE SITE CONTAINMENT AREAS.
6. CONTAINMENT AREA/STOCKPILED MATERIAL AND DECONTAMINATION AREAS SHALL BE KEPT COVERED WHEN NOT IN USE TO PREVENT RAIN WATER INFILTRATION AND MATERIAL RUN OFF.
7. THE NUMBER OF CONTAINMENT AREAS NEEDED ON SITE IS DEPENDENT UPON THE AMOUNT OF MATERIAL THAT WILL NEED TO BE STOCKPILED (BASED UPON SOIL ANALYSIS RESULTS). IT IS ANTICIPATED THAT ONE DECONTAMINATION AREA WILL BE REQUIRED.
8. THE MOST EFFECTIVE LOCATION OF CONTAINMENT AND DECONTAMINATION AREAS IS TO BE DETERMINED IN THE FIELD.

RECORD DRAWINGS
TO THE BEST OF OUR KNOWLEDGE, INFORMATION AND BELIEF, THESE RECORD DRAWINGS SUBSTANTIALLY REPRESENT THE PROJECT AS CONSTRUCTED.

(RECORD DRAWING: MADE FROM DRAWING NO. 1, TRACER NO. B0046918/0001/00003/DWG/CONTRACT/46918G09.DWG, DATED 7/18/12) DATE_____BY_____

CITY: SYRACUSE, NY DIV/GROUP:ENV/CADD DB: GMS KFS GMS K.SARTORI PIC:J.VOGELEY PM: W.MCCUNE TM: J.ROBERTSON LYR:ON=*;OFF=*REF*
G:\ENVCAD\SYRACUSE\ACT\B0046918\0003\00005\DWG\CONTRACT\RECORD\46918G09.dwg LAYOUT: 9 SAVED: 7/9/2013 5:25 PM ACADVER: 18.1S (LMS TECH) PAGESETUP: DWG TO PDF PLOTSTYLETABLE: PLTCONT.CTB PLOTTED: 9/17/2013 9:10 AM BY: GETTS, BRIAN
XREFS: IMAGES:
46918X00

NOT TO SCALE

THIS BAR REPRESENTS ONE INCH ON THE ORIGINAL DRAWING: USE TO VERIFY FIGURE REPRODUCTION SCALE

No.	Date	Revisions	By	Ckd

THIS DRAWING IS THE PROPERTY OF THE ARCADIS ENTITY IDENTIFIED IN THE TITLE BLOCK AND MAY NOT BE REUSED OR ALTERED IN WHOLE OR IN PART WITHOUT THE EXPRESS WRITTEN PERMISSION OF SAME.

Professional Engineer's Name: TIMOTHY E. MILLER		
Professional Engineer's No.: 077919-1		
State: NY	Date Signed	Project Mgr.: WTM
Designed by: AMR	Drawn by: KLS	Checked by: TEM/AMR

ARCADIS

ARCADIS OF NEW YORK, INC.

FORMER TAPPAN TERMINAL SITE • HASTINGS ON HUDSON, NEW YORK
GROUNDWATER REMEDIATION SYSTEM

MISCELLANEOUS DETAILS AND SECTIONS (3)

MECHANICAL

ARCADIS Project No.
B0046918.0003.00005

Date
SEPTEMBER 2013

ARCADIS
6723 TOWPATH RD
PO BOX 66
SYRACUSE, NY 13214-0066
TEL. 315.446.9120

9

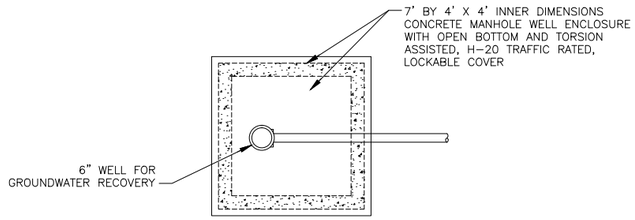

PLAN

NOT TO SCALE

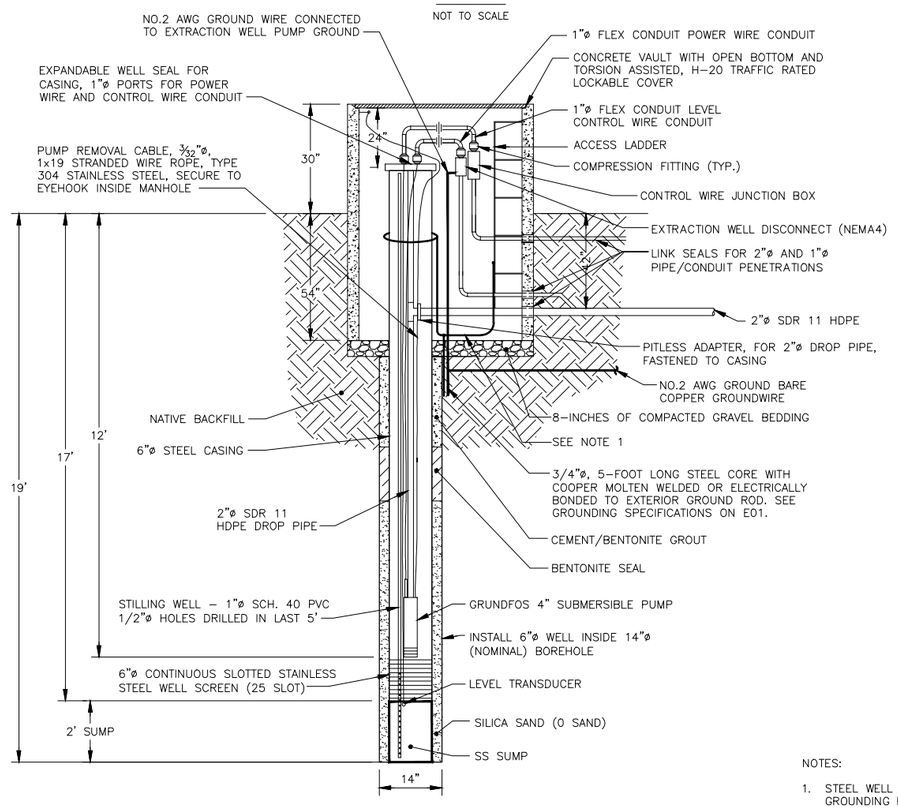

NOTES:

1. STEEL WELL CASING AND ALUMINUM LADDER BONDED TO GROUNDING ROD.
2. INSTALLED STILLING WELL IN EXTRACTION WELLS EW-1 AND EW-2 CONSTRUCTED OF 1"ø SCH. 40 PVC WITH 1/2"ø HOLES DRILLED IN LAST 5 FEET.

EXTRACTION WELL CONSTRUCTION DETAIL (1)

NOT TO SCALE

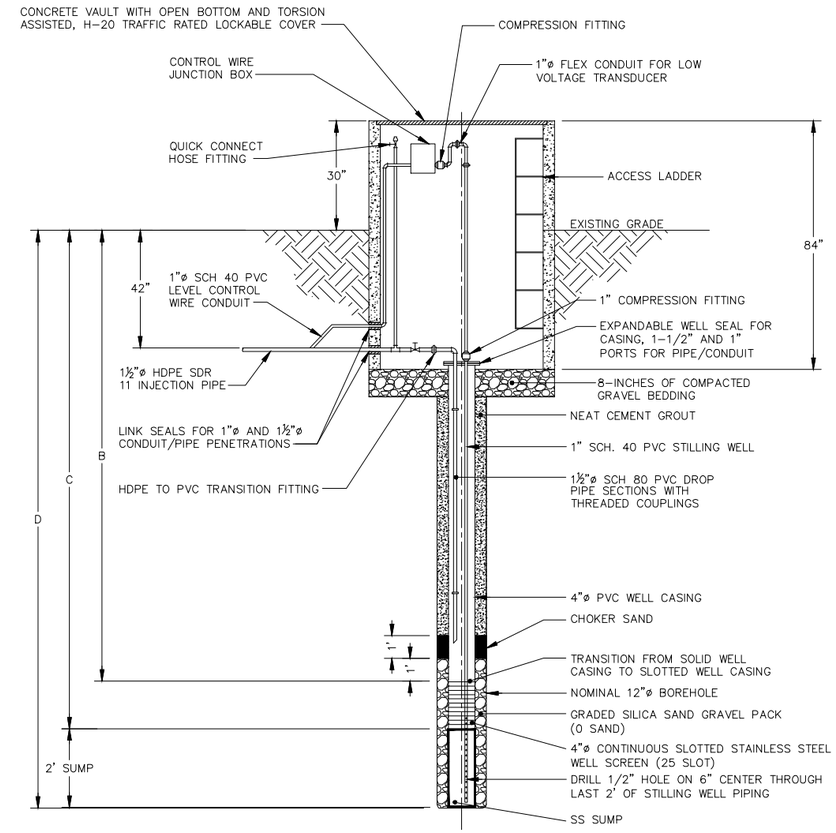

NOTES:

1. INJECTION WELL LEVEL TRANSDUCER TO BE INSTALLED IN 1" SCH. 40 PVC STILLING WELL
2. LEVEL TRANSDUCER DEPTH TO BE DETERMINED IN FIELD.
3. IW-1, IW-2: B=11'
   C=16'
   D=18'
   IW-3, IW-4: B=12'
   C=17'
   D=19'

INJECTION WELL CONSTRUCTION DETAIL (2)

NOT TO SCALE

RECORD DRAWINGS
TO THE BEST OF OUR KNOWLEDGE, INFORMATION AND BELIEF, THESE RECORD DRAWINGS SUBSTANTIALLY REPRESENT THE PROJECT AS CONSTRUCTED.

(RECORD DRAWING: MADE FROM DRAWING NO. 1, TRACER NO. B0046918/0001/00003/DWG/CONTRACT/46918G10.DWG, DATED 7/18/12) DATE_____BY_____

CITY: SYRACUSE, NY DIV/GROUP:ENV/CADD DB: GMS KFS GMS K.SARTORI PIC:J.VOGELEY PM: W.MCCUNE TM: W.MCCUNE LYR:ON=*;OFF=*REF*
G:\ENVCAD\SYRACUSE\ACT\B0046918\00030\005\DWG\CONTRACT\RECORD\46918G10.dwg LAYOUT: 10 SAVED: 7/10/2013 4:47 PM ACADVER: 18.1S (LMS TECH) PAGESETUP: DWG TO PDF PLOTSTYLETABLE: PLTCONT.CTB PLOTTED: 9/17/2013 9:10 AM BY: GETTS, BRIAN

XREFS: 46918X00
IMAGES:

NOT TO SCALE

THIS BAR REPRESENTS ONE INCH ON THE ORIGINAL DRAWING: USE TO VERIFY FIGURE REPRODUCTION SCALE

No.	Date	Revisions	By	Ckd

THIS DRAWING IS THE PROPERTY OF THE ARCADIS ENTITY IDENTIFIED IN THE TITLE BLOCK AND MAY NOT BE REUSED OR ALTERED IN WHOLE OR IN PART WITHOUT THE EXPRESS WRITTEN PERMISSION OF SAME.

Professional Engineer's Name: TIMOTHY E. MILLER
Professional Engineer's No.: 077919-1
State: NY | Date Signed: | Project Mgr.: WTM
Designed by: AMR | Drawn by: KLS | Checked by: TEM/AMR

ARCADIS
ARCADIS OF NEW YORK, INC.

FORMER TAPPAN TERMINAL SITE • HASTINGS ON HUDSON, NEW YORK
GROUNDWATER REMEDIATION SYSTEM

EXTRACTION & INJECTION WELL CONSTRUCTION DETAILS

MECHANICAL

ARCADIS Project No. B0046918.0003.00005
Date SEPTEMBER 2013
ARCADIS
6723 TOWPATH RD
PO BOX 66
SYRACUSE, NY 13214-0066
TEL. 315.446.9120

10

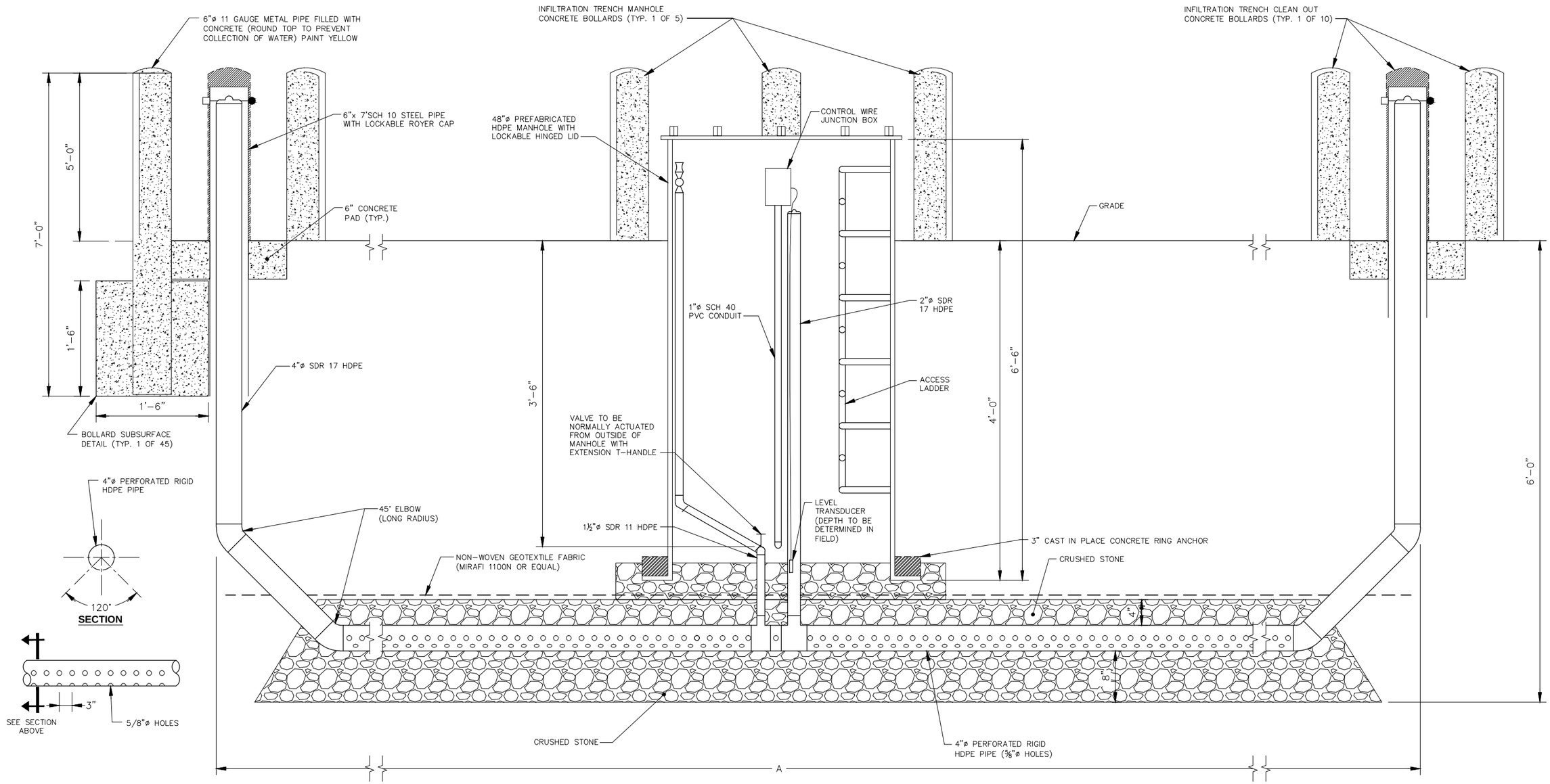

NOTES:

1. TRENCH 1: A = 75'
   TRENCH 2: A = 75'
   TRENCH 3: A = 75'
   TRENCH 4: A = 50'
   TRENCH 5: A = 50'

INFILTRATION TRENCH DETAIL

NOT TO SCALE

RECORD DRAWINGS
TO THE BEST OF OUR KNOWLEDGE, INFORMATION AND BELIEF, THESE RECORD DRAWINGS SUBSTANTIALLY REPRESENT THE PROJECT AS CONSTRUCTED.

(RECORD DRAWING: MADE FROM DRAWING NO. 1, TRACER NO. B0046918/0001/00003/DWG/CONTRACT/46918G11.DWG, DATED 7/18/12) DATE_____BY_____

NOT TO SCALE

THIS BAR REPRESENTS ONE INCH ON THE ORIGINAL DRAWING: USE TO VERIFY FIGURE REPRODUCTION SCALE

No.	Date	Revisions	By	Ckd

THIS DRAWING IS THE PROPERTY OF THE ARCADIS ENTITY IDENTIFIED IN THE TITLE BLOCK AND MAY NOT BE REUSED OR ALTERED IN WHOLE OR IN PART WITHOUT THE EXPRESS WRITTEN PERMISSION OF SAME.

Professional Engineer's Name: TIMOTHY E. MILLER
Professional Engineer's No.: 077919-1
State: NY | Date Signed: | Project Mgr.: WTM
Designed by: AMR | Drawn by: KLS | Checked by: TEM/AMR

ARCADIS
ARCADIS OF NEW YORK, INC.

FORMER TAPPAN TERMINAL SITE • HASTINGS ON HUDSON, NEW YORK
GROUNDWATER REMEDIATION SYSTEM

INFILTRATION TRENCH DETAIL

MECHANICAL

ARCADIS Project No. B0046918.0003.00005
Date SEPTEMBER 2013
ARCADIS
6723 TOWPATH RD
PO BOX 66
SYRACUSE, NY 13214-0066
TEL: 315.446.9120

11

CITY: SYRACUSE, NY DIV/GROUP:ENV/CADD DB: GMS KFS GMS K.SARTORI PIC:J.VOGELEY PM: W.MCCUNE TM: W.MCCUNE LYR:ON=*;OFF=*REF*
G:\ENVCAD\SYRACUSE\ACT\B0046918\0003\00005\DWG\CONTRACT\RECORD\46918G11.dwg LAYOUT: 11 SAVED: 7/10/2013 3:12 PM ACADVER: 18.1S (LMS TECH) PAGESETUP: DWG TO PDF PLOTSTYLETABLE: PLTCONT.CTB PLOTTED: 9/17/2013 9:10 AM BY: GETTS, BRIAN
XREFS: IMAGES:
46918X00

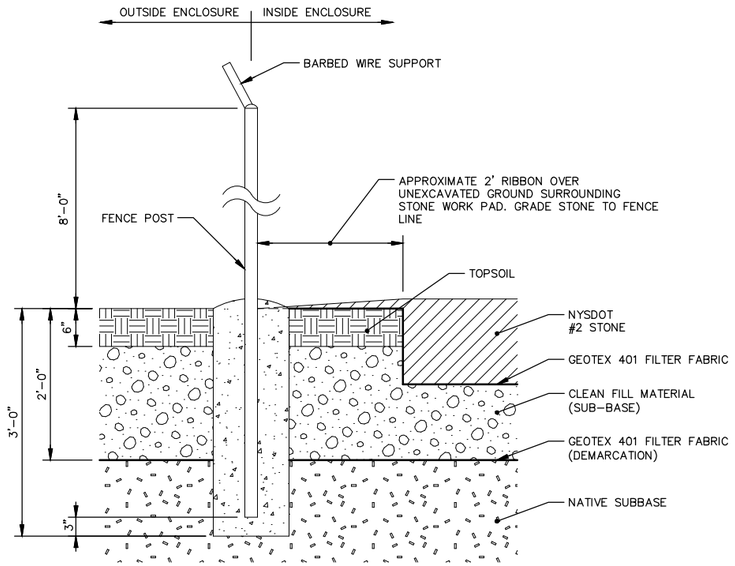

FENCE POST DETAIL

NOT TO SCALE

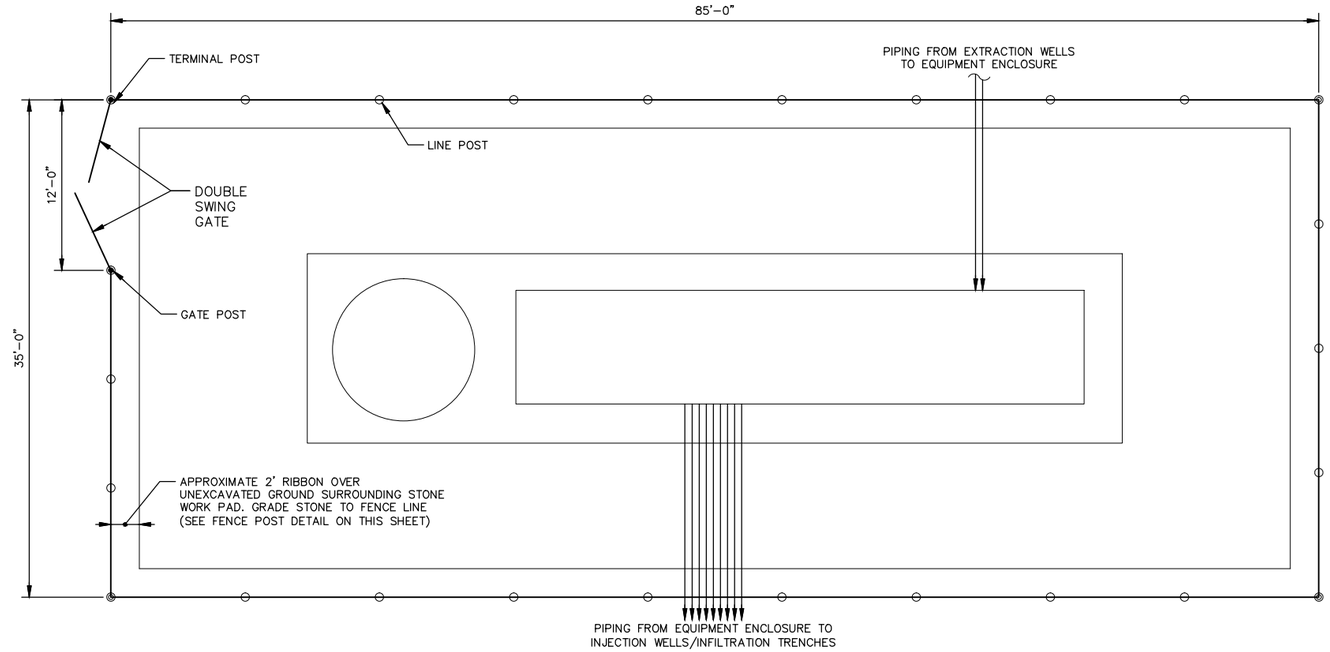

EQUIPMENT ENCLOSURE FENCE SPECIFICATIONS DETAIL

NOT TO SCALE

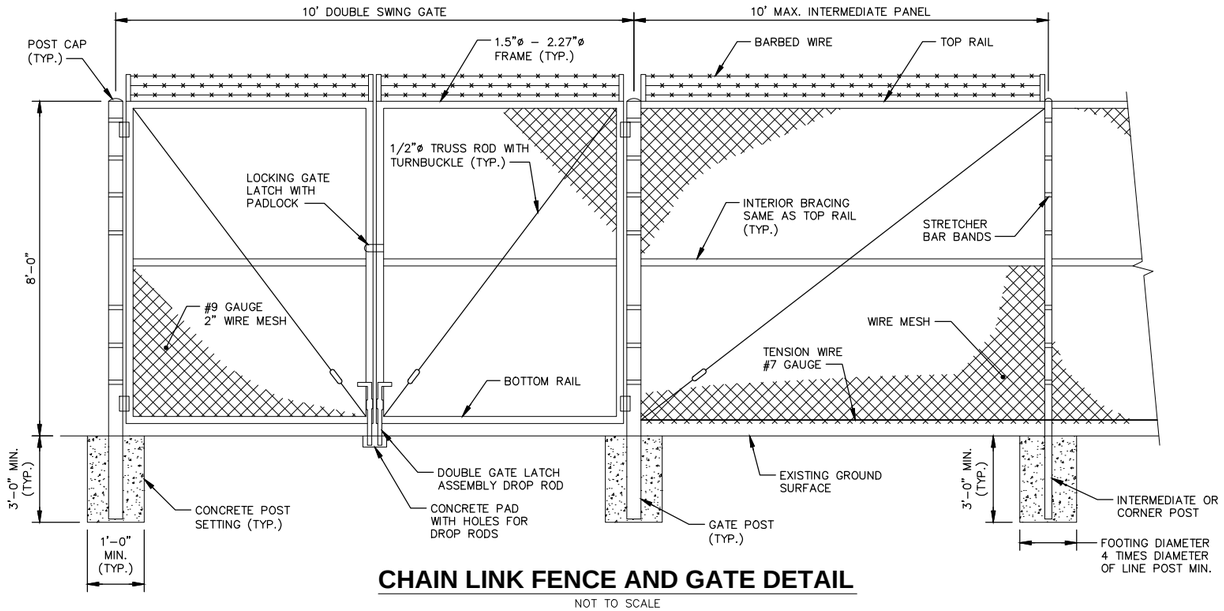

CHAIN LINK FENCE AND GATE DETAIL

NOT TO SCALE

RECORD DRAWINGS
TO THE BEST OF OUR KNOWLEDGE, INFORMATION AND BELIEF, THESE RECORD DRAWINGS SUBSTANTIALLY REPRESENT THE PROJECT AS CONSTRUCTED.

DATE_____BY_____

NOT TO SCALE

THIS BAR REPRESENTS ONE INCH ON THE ORIGINAL DRAWING: USE TO VERIFY FIGURE REPRODUCTION SCALE

No.	Date	Revisions	By	Ckd

THIS DRAWING IS THE PROPERTY OF THE ARCADIS ENTITY IDENTIFIED IN THE TITLE BLOCK AND MAY NOT BE REUSED OR ALTERED IN WHOLE OR IN PART WITHOUT THE EXPRESS WRITTEN PERMISSION OF SAME.

Professional Engineer's Name: TIMOTHY E. MILLER
Professional Engineer's No.: 077919-1
State: NY | Date Signed: | Project Mgr.: WTM
Designed by: AMR | Drawn by: KLS | Checked by: TEM/AMR

ARCADIS
ARCADIS OF NEW YORK, INC.

FORMER TAPPAN TERMINAL SITE • HASTINGS ON HUDSON, NEW YORK
GROUNDWATER REMEDIATION SYSTEM

FENCING AND WORK AREA DETAILS

GENERAL

ARCADIS Project No. B0046918.0003.00005
Date SEPTEMBER 2013

ARCADIS
6723 TOWPATH RD
PO BOX 66
SYRACUSE, NY 13214-0066
TEL. 315.446.9120

12

CITY: SYRACUSE, NY DIV/GROUP: ENV/CADD DB: GMS KFS K.SARTORI PIC: M.FLEISCHNER PM: W.MCCUNE TM: J.ROBERTSON LYR:ON=*;OFF=*REF*
G:\ENVCAD\SYRACUSE\ACT\B0046918\0003\00005\DWG\CONTRACT\RECORD\46918G12.dwg LAYOUT: 12 SAVED: 9/17/2013 9:19 AM PLOTTED: 9/17/2013 9:19 AM BY: GETTS, BRIAN
XREFS: 46918X00 IMAGES: PAGESETUP: DWG TO PDF PLOTSTYLETABLE: PLTCONT.CTB (LMS TECH) ACADVER: 18.1S (LMS TECH)

INSTRUMENT SPECIFICATIONS:

1. FLOWMETERS (FIT–100, –110, –201, –700), SHALL BE 2–INCH BADGER METER MODEL M–SERIES OR EQUAL WITH LINER SUITABLE FOR WATER SERVICE, 316 SS ELECTRODES, GROUNDING RINGS, AND INTEGRAL MOUNT ELECTRONICS WITH LOCAL RATE AND TOTAL DISPLAY.

2. FLOW TOTALIZERS (FT–300–FT–380), SHALL BE 1–½" BADGER MODEL 120 RCDL RECORD METER WITH LCP INTERNALS AND 1–½" THREADED CONNECTIONS. NORMAL FLOW RANGE 2–120 GPM. METER TO BE EQUIPPED WITH A RTR REGISTER/TRANSMITTER.

3. FLOWMETER (FM–200), SHALL BE DWYER INDUSTRIAL MODEL IF2702 OR EQUAL.

4. LEVEL TRANSMITTER (LIT–200, LIT–300), SHALL BE WIKA MODEL LS–10 OR EQUAL WITH SS WETTED PARTS, 4–20 MA OUTPUT.

5. LEVEL SWITCH (LSHH–200, LSLL–200, LSHH–300, LSLL–300 AND, LSHH–400) SHALL BE GEMS MODEL MBLU40T OR EQUAL FLOAT SWITCH, NORMALLY OPEN OUTPUT WITH 40' CABLE.

6. LIQUID PRESSURE GAUGES (PI–101, –102, –103, –201, –301) SHALL BE WIKA MODEL 232 OR EQUAL 4.5–INCH LOW PRESSURE PROCESS GAUGE WITH LOWER MOUNT, 316 SS CONNECTION, 0–100 PSI RANGE.

7. LIQUID PRESSURE GAUGES (PI–700 – PI–708) SHALL BE WIKA MODEL 232 OR EQUAL 4.5–INCH LOW PRESSURE PROCESS GAUGE WITH LOWER MOUNT, 316 SS CONNECTION, 0–50 PSI RANGE.

8. AIR PRESSURE GAUGES (PI–900, –901) SHALL BE WIKA MODEL 232 OR EQUAL 4.5–INCH LOW PRESSURE PROCESS GAUGE WITH LOWER MOUNT, 316 SS CONNECTION, 0–100 PSI RANGE.

9. SOLENOID VALVE SV–900 SHALL BE ANDERSON–BOLDS VALCOR MODEL SV321 GF02N5DG4 OR EQUAL.

10. TEMPERATURE TRANSMITTER (TIT–800) SHALL BE FOXBORO MODEL RTT150T1WCQNAF–21 INSERTION–STYLE TEMPERATURE TRANSMITTER OR EQUAL WITH LOCAL DISPLAY NEMA RATED ENCLOSURE, 3–INCH RTD WITH NO WELL, 4–20 MA OUTPUT, LOOP POWERED.

11. PRESSURE SWITCHES (PS–200, –300 WET, PSL–900 DRY) SHALL BE ASHCROFT MODEL TYPE B, 0–100 PSI, PART # AC B429B– 0/100.

12. EXTRACTION WELL LEVEL TRANSMITTER (LT–100, –110) SHALL BE GEOTECH MODEL 8205102. CABLE SHALL BE 25–FEET LONG, PRESSURE TRANSDUCER SHALL BE NON–VENTED RATED FOR 30–PSI.

13. INJECTION TRENCH LEVEL TRANSDUCER (LT–700 – LT–704) SHALL BE GEOTECH MODEL 8205102. CABLE SHALL BE 10–FEET LONG, PRESSURE TRANSDUCER SHALL BE NON–VENTED RATER FOR 30–PSI.

14. INJECTION WELL LEVEL TRANSMITTER (LT–705 – LT–708) SHALL BE GEOTECH MODEL 8205102. CABLE SHALL BE 20–FEET LONG, PRESSURE TRANSDUCER SHALL BE NON–VENTED RATED FOR 30–PSI.

15. LEVEL SWITCH (LSHH–800) SHALL BE A FLOW LINE SWITCH –TEK LV20–L201 LEVEL SWITCH.

16. MOTORIZED CONTROL VALVE (XCV–200) SHALL BE A A–T CONTROLS 90C–F1–300/WEC1–XX 3–INCH 150# ANSI RF FLANGED FULL PORT BALL VALVE, CARBON STEEL BODY, 316 SS BALL AND STEM, RTFE SEATS MOUNTED WITH WE–1350. 120/60–2–POSITION ELECTRIC ACTUATOR, 2 AUXILIARY SWITCHES AND BEACON FOR LOCAL/REMOTE POSITION INDICATION, MANUAL HAND WHEEL OVERRIDE.

17. DISSOLVED OXYGEN PROBE WITH TRANSMITTER (AE/AIT–300) SHALL BE A HACH LDO PROBE, MOUNTING CONVERSION ADAPTER, SC200 CONTROLLER WITH 2 CHANNELS, 9020000–SC200.

18. ATMOSPHERIC PRESSURE TRANSMITTER (PIT–800) SHALL BE VAISALA PTB110 BAROMETER WITH WERDMULLER DC/DC SIGNAL CONDITIONER (CONFIGURABLE).

19. OXYGEN SENSOR SHALL BE XNX–UTAE–RNNNN, XNX UNIVERSAL TRANSMITTER 1226–9000, UL/CSA, 3/4, ALUMINUM, ELECTROCHEMICAL AND RELAYS AND XNXXS01SS, XNX SENSOR OXYGEN 0–25%.

MAJOR EQUIPMENT SPECIFICATIONS:

1. WELL PUMPS (P–100, –110) SHALL BE GRUNDFOS MODEL 60S20–4(60S204PETF) OR EQUAL SUBMERSIBLE WELL PUMPS WITH 2 HP, 460 V, 3 PHASE VITON FITTED MOTORS CAPABLE OF 50 GPM AT 60(P–100 = 61' TDH, P–110 = 56' TDH) FEET TDH.

2. TRANSFER PUMP P–200 SHALL BE A GOULDS NPE STAINLESS STEEL PUMP MODEL 3ST1H5B4 WITH 3 HP, 460 VOLT, THREE PHASE MOTOR CAPABLE OF 100 GPM AT 65 TDH. PUMP WILL BE CONTROLLED WITH NEMA 1 PUMP PANEL.

3. INJECTION PUMP P–300 SHALL BE A GOULDS NPE STAINLESS STEEL PUMP MODEL 3ST1F5E4 WITH 1.5 HP, 460 VOLT, THREE PHASE MOTOR CAPABLE OF 100 GPM AT 25 TDH. PUMP WILL BE CONTROLLED WITH NEMA 1 PUMP PANEL.

4. AIR COMPRESSOR T–500/600 SHALL BE A KAESER AIRCENTER PACKAGED ROTARY SCREW AIR COMPRESSOR [AIR COOLED] WITH INTEGRAL REFRIGERATED DRYER (460 VAC, 60 HZ, 3 PHASE), ECO–DRAIN ELECTRONIC DEMAND DRAIN, SOUND ATTENUATED ENCLOSURE (67 DB(A)), PC–BASED SIGMA CONTROL BASIC SYSTEM, TWO–STAGE 4 MICRON AIR INTAKE FILTER, AND THREE–STAGE SEPARATION SYSTEM, TANK–MOUNTED ON A STEEL FRAME/72–GALLON ASME AIR RECEIVER WITH A SAFETY RELIEF VALVE, ISOLATION VALVES, AND OPTIONAL CLEAN AIR TREATMENT PACKAGE. THIS AIR–COOLED SYSTEM WILL PRODUCE 28.5 CORRECTED SCFM OF AIR AT 125 PSIG.

5. OXYGEN GENERATOR T–800 SHALL BE AN AIRSEP MODEL AS–D+100 SERIES PSA OXYGEN GENERATOR [PART NUMBER AS097–1] (110/120 VAC, 50/60 HZ, 1 PHASE) WITH ACCESSORY KITS [PART NUMBER KI425–1 AND KI474–1], AND 60–GALLON ASME OXYGEN–CLEANED RECEIVER [PART NUMBER TA150–1]. UNIT WILL BE CALIBRATED TO DELIVER 100 SCFH OF 90 TO 95% PURITY OXYGEN AT A MAXIMUM DELIVERY PRESSURE OF 45 PSIG.

6. VENTURI INJECTOR SHALL BE MAZZEI MODEL 2081 PVDF INJECTOR OR EQUAL WITH 2" ASME B16.5 150# FLANGE INLET/OUTLET, 100 GPM AT 50 PSI INLET PRESSURE, 100 CFH OXYGEN INJECTION.

7. FLASH REACTOR SHALL BE MAZZEI MODEL FR235–A OR EQUAL FLASH REACTOR OF STAINLESS STEEL CONSTRUCTION.

8. WATER TANKS (T–200, T–300) SHALL BE POLY PROCESSING MODEL 1001450 OR EQUAL WITH 1450–GALLON CAPACITY AND HIGH DENSITY POLYETHYLENE CONSTRUCTION.

9. SOLIDS SETTLING TANK (T–400) SHALL BE ASSMANN MODEL ICT 5500 OR EQUAL VERTICAL STORAGE TANK WITH 24" HINGED MANWAY COVER, 4" POLYETHYLENE MUSHROOM VENT WITH EPDM GASKET, 3" FDO WITH 316 SS INSERT AND XLPE FLANGE ADAPTER, 3" PVC FLANGE FITTING, 80 DEGREE DELTA T HEAT TRACING PACKAGE, 2" THICK NOMINAL URETHANE FOAM INSULATION.

10. VARIABLE FREQUENCY DRIVE SHALL BE AN ABB DRIVE ACS355 DRIVE. DRIVES WILL BE INSTALLED IN MOTOR CONTROL ENCLOSURE NUMBER 1 (MCE–1) (SEE E01 & E04 FOR MORE DETAILS ON MCE–1).

11. EQUIPMENT ENCLOSURE SHALL BE A MODIFIED SHIPPING CONTAINER, DIMENSIONS OF APPROXIMATELY 8 FOOT WIDE BY 40 FOOT LONG. WITH INTERIOR HEATING, VENTILATION, AND INSULATED. ALL EQUIPMENT WITHIN THE ENCLOSURE SHALL BE PROVIDED, INSTALLED, AND SHIPPED BY VENDOR.

MECHANICAL SPECIFICATIONS:

1. ALL PVC PIPE JOINTS SHALL BE SOLVENT WELDED UNLESS OTHERWISE STATED.

2. ALL HDPE PIPES SHALL BE BUTT–FUSED.

3. ALL PIPE SHALL BE INSTALLED AND PRESSURE TESTED IN ACCORDANCE WITH MANUFACTURER'S SPECIFICATIONS. ZERO LEAKAGE IS ALLOWED FOR ALL JOINTS.

4. ALL PIPE SHALL BE SUPPORTED AT 5'–0" O.C. (MAX.) AND LOCATED 2'–0" FROM ALL JOINT LOCATIONS. ABOVE–GROUND PIPING SHALL BE SUPPORTED PRIMARILY BY THE TRAILER STRUCTURE.

5. BALL VALVES SHALL BE PVC TRUE UNION BALL VALVES WITH VITON O–RING SEAL, TEFLON SELF–LUBRICATING SEATS, TIGHT SHUTOFF IN EITHER DIRECTION, FULL PORT DESIGN, SOLVENT WELDED SOCKET ENDS AND OPERATING HANDLE. MANUFACTURER: HAYWARD, NIBCO, PLASTO–MATIC, OR EQUAL.

6. GLOBE VALVES SHALL BE ASAHI MANUAL CONTROL VALVES OF PVC CONSTRUCTION WITH EPDM SEALS, AND SOCKET CONNECTIONS.

7. CHECK VALVES SHALL BE SWING CHECK TYPE WITH VITON SEATS. MANUFACTURER: HAYWARD, NIBCO, PLASTO–MATIC, OR EQUAL.

8. SAMPLE TAPS AND DRAIN VALVES SHALL CONSIST OF A 3/4" DIAMETER PVC PIPE EXTENSION, BALL VALVE AND NIPPLE. SAMPLE TAPS AND DRAIN VALVES SHALL BE LOCATED AT LOCATIONS SHOWN ON THE DRAWINGS AND AT ALL LOW ELEVATIONS IN THE PROCESS PIPING.

9. ALL FLOW METERS SHALL HAVE STRAIGHT PIPE AT A MINIMUM OF 10 PIPE DIAMETERS PRECEDING AND 5 PIPE DIAMETERS FOLLOWING, OR AS SPECIFIED BY THE MANUFACTURER.

10. EXTRACTION WELL CONCRETE MANHOLES SHALL BE OLD CASTLE PRE–CAST OR EQUAL 7' BY 4' X 4' INNER DIMENSION OPEN BOTTOM 6" THICK WALLS, CONCRETE VAULT WITH TORSION ASSISTED ALUMINUM H–20 TRAFFIC RATED, LOCKABLE COVER AS DIRECTED BY THE DRAWINGS.

11. 1"ø PENETRATIONS IN THE INJECTION AND EXTRACTION WELL VAULTS WALLS SHALL BE 3"ø BORE SEALED WITH (4) LS–300C LINK–SEALS.

12. PITTLESS ADAPTERS SHALL BE MAASSMIDWEST MODEL S–20 OR EQUAL.

13. HDPE MANHOLE SHALL BE PRE–FABRICATED WITH LOCKABLE HINGED LID AND ACCESS LADDER.

14. NEEDLE VALVE SHALL BE GRAINGER MODEL 5WLIZ 1/4 INCH DIAMETER BRASS RATED 600 PSI @ 300°F.

15. PIPE INSULATION (2 INCH, 3 INCH, 6 INCH, 1–½ INCH PIPE) SHALL BE 1–INCH THICK CLOSED CELL FOAM INSULATION WITH PVC JACKETING.

16. INJECTION WELL CONCRETE MANHOLES SHALL BE OLD CASTLE PRE–CAST OR EQUAL 7' BY 4' X 4' INNER DIMENSION OPEN BOTTOM, 6" THICK WALLS, CONCRETE VAULT WITH TORSION ASSISTED ALUMINUM H–20 TRAFFIC RATED. LOCKABLE COVER AS DIRECTED BY THE DRAWINGS.

17. 1.5"ø PENETRATIONS IN THE INJECTION WELL VAULT WALLS SHALL BE 4"ø BORE SEALED WITH 6 LS–315C LINK–SEALS. 2"ø PENETRATIONS IN THE EXTRACTION WELL VAULT WALLS SHOULD BE 4"ø BORE SEALED WITH 6 LS–300C LINK–SEALS.

18. FLEXIBLE CONNECTIONS SHALL BE INSTALLED AT LOCATIONS WHERE HDPE PIPING IS CONNECTED TO SYSTEM ENCLOSURE AND WHERE PVC PIPE IS CONNECTED TO SOLIDS SETTLING TANK. FLEXIBLE CONNECTIONS SHALL BE A 12–INCH LENGTH OF HOSE. FLEXIBLE CONNECTION DIAMETER SHALL MATCH EFFECTED HDPE AND PVC PIPING.

19. CONCRETE EQUIPMENT PAD SHALL INCLUDE #4 REINFORCING STEEL BAR WITH SPACING 8–INCHES C/C EACH WAY. CONCRETE SHALL BE 4,000 PSI @ 28 DAYS AND AIR ENTRAINED 6% ± 1%. CONCRETE WATER/CEMENT RATIO SHALL BE 0.45 MAX AND SHALL BE CURED WITH CURING COMPOUND PER ACI REQUIREMENTS. CONCRETE SLAB SHALL BE SAW CUT WITHIN 8 HOURS OF PLACEMENT. THREE CUTS SHALL BE MADE @ 13'–9" C/C TO BREAK UP THE SLAB INTO 4 SEGMENTS. CUTS SHALL BE 2" DEEP. CONNECTIONS TO THE CONCRETE PAD SHALL HAVE FLEX TO ACCOMMODATE MOVEMENT.

RECORD DRAWINGS
TO THE BEST OF OUR KNOWLEDGE, INFORMATION AND BELIEF, THESE RECORD DRAWINGS SUBSTANTIALLY REPRESENT THE PROJECT AS CONSTRUCTED.

(RECORD DRAWING: MADE FROM DRAWING NO. 1, TRACER NO. B0046918/0001/00003/DWG/CONTRACT/46918G12.DWG, DATED 7/18/12) DATE_____BY_____

CITY: SYRACUSE, NY DIV/GROUP:ENV/CADD DB: GMS KFS GMS K.SARTORI PIC:J.VOGELEY PM: W.MCCUNE TM: J.ROBERTSON LYR:ON=*;OFF=*REF*
G:\ENVCAD\SYRACUSE\ACT\B0046918\00003\000005\DWG\CONTRACT\RECORD\46918G13.dwg LAYOUT: 13 SAVED: 9/17/2013 9:20 AM ACADVER: 18.1S (LMS TECH) PAGESETUP: DWG TO PDF PLOTSTYLETABLE: PLTCONT.CTB PLOTTED: 9/17/2013 9:21 AM BY: GETTS, BRIAN
XREFS: IMAGES:
46918X00

THIS BAR REPRESENTS ONE INCH ON THE ORIGINAL DRAWING: USE TO VERIFY FIGURE REPRODUCTION SCALE

No.	Date	Revisions	By	Ckd

THIS DRAWING IS THE PROPERTY OF THE ARCADIS ENTITY IDENTIFIED IN THE TITLE BLOCK AND MAY NOT BE REUSED OR ALTERED IN WHOLE OR IN PART WITHOUT THE EXPRESS WRITTEN PERMISSION OF SAME.

Professional Engineer's Name: TIMOTHY E. MILLER
Professional Engineer's No.: 077919-1
State: NY | Date Signed: | Project Mgr.: WTM
Designed by: AMR | Drawn by: KLS | Checked by: TEM/AMR

ARCADIS
ARCADIS OF NEW YORK, INC.

FORMER TAPPAN TERMINAL SITE • HASTINGS ON HUDSON, NEW YORK
GROUNDWATER REMEDIATION SYSTEM

SPECIFICATIONS

MECHANICAL

ARCADIS Project No. B0046918.0003.00005
Date SEPTEMBER 2013
ARCADIS
6723 TOWPATH RD
PO BOX 66
SYRACUSE, NY 13214-0066
TEL. 315.446.9120

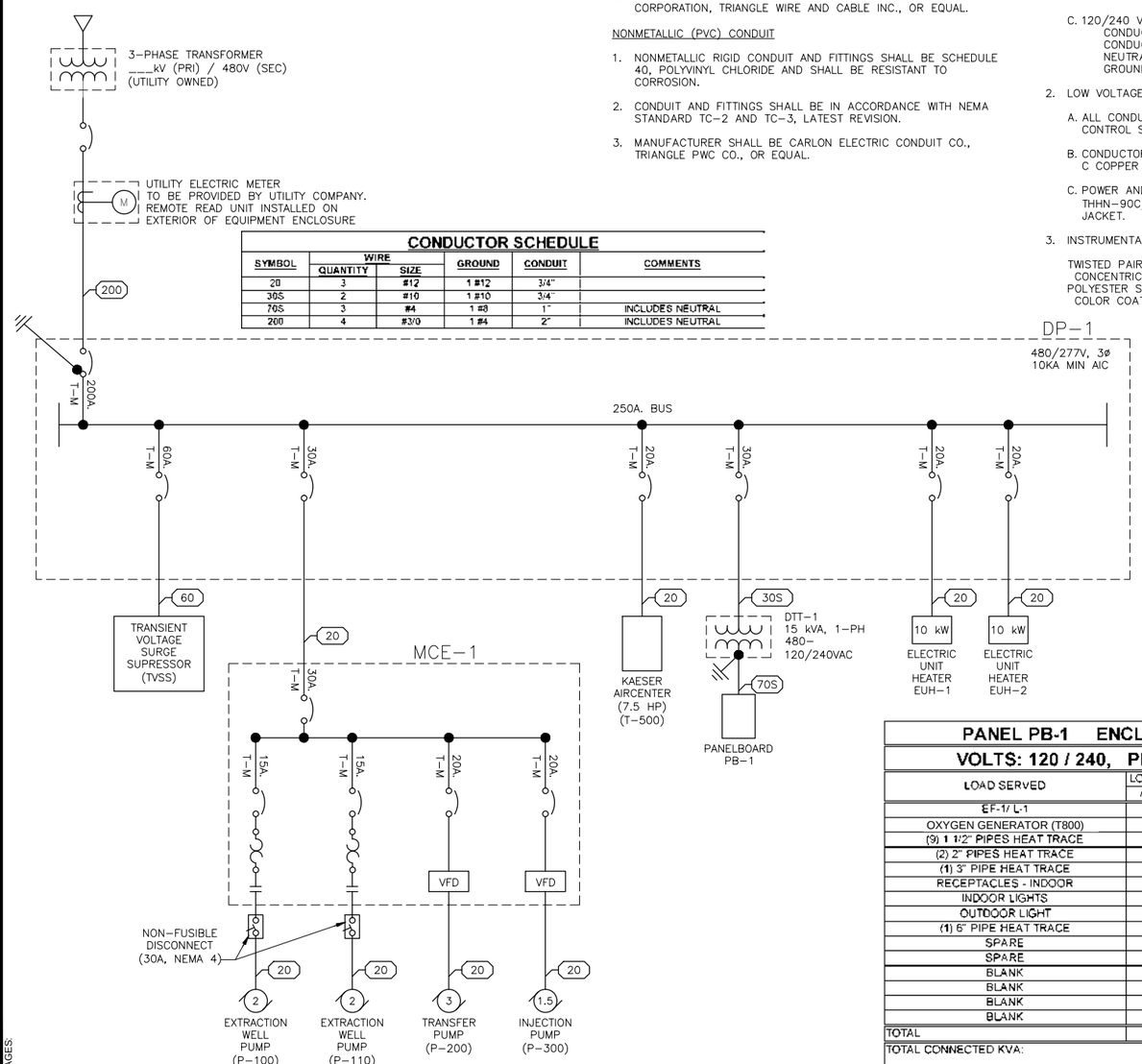

CONDUCTOR SCHEDULE

SYMBOL	WIRE QUANTITY	WIRE SIZE	GROUND	CONDUIT	COMMENTS
20	3	#12	1 #12	3/4"	
30S	2	#10	1 #10	3/4"	
70S	3	#4	1 #8	1"	INCLUDES NEUTRAL
200	4	#3/0	1 #4	2"	INCLUDES NEUTRAL

ELECTRICAL SPECIFICATIONS:

GENERAL

1. ALL ELECTRICAL EQUIPMENT SHALL BE U.L. LISTED AND LABELED.
2. ALL ELECTRICAL WORK SHALL BE IN ACCORDANCE WITH THE LATEST REVISION OF NFPA-70 NEC.

RIGID METAL CONDUIT (RGS)

1. GALVANIZED STEEL, HOT-DIPPED ZINC, ANSI STANDARD C80.1 AND C80.4.
2. MANUFACTURER SHALL BE ALLIED TUBE & CONDUIT CORPORATION, TRIANGLE WIRE AND CABLE INC., OR EQUAL.

NONMETALLIC (PVC) CONDUIT

1. NONMETALLIC RIGID CONDUIT AND FITTINGS SHALL BE SCHEDULE 40, POLYVINYL CHLORIDE AND SHALL BE RESISTANT TO CORROSION.
2. CONDUIT AND FITTINGS SHALL BE IN ACCORDANCE WITH NEMA STANDARD TC-2 AND TC-3, LATEST REVISION.
3. MANUFACTURER SHALL BE CARLON ELECTRIC CONDUIT CO., TRIANGLE PWC CO., OR EQUAL.

JUNCTION BOXES

JUNCTION BOXES AND FITTINGS SHALL BE OF GALVANIZED STEEL OR COPPER FREE ALUMINUM.

WIRES AND CABLES

1. GENERAL
   A. ALL CONDUCTORS, UNLESS OTHERWISE NOTED, SHALL BE STRANDED COPPER, CONSTRUCTED OF SOFT DRAWN OR ANNEALED COPPER.
   B. CONDUCTORS INSULATION SHALL BE COLOR CODED, WITH COLOR OF INSULATION ONE COLOR THROUGHOUT THE ENTIRE RUN.
   C. 120/240 VAC, SINGLE PHASE, 3 WIRE
      CONDUCTOR 1 - BLACK
      CONDUCTOR 2 - RED
      NEUTRAL - WHITE
      GROUND - GREEN
2. LOW VOLTAGE CONDUCTORS
   A. ALL CONDUCTORS FOR POWER, LIGHTING AND 120 VAC CONTROL SHALL BE RATED A MINIMUM 600 VAC.
   B. CONDUCTORS SHALL BE CONSTRUCTED OF UNCOATED CLASS C COPPER CONCENTRIC-LAY-STRANDED WIRES.
   C. POWER AND LIGHTING CONDUCTORS SHALL BE TYPE THHN-90C/THWN-2-90C WITH PVC INSULATION AND NYLON JACKET.
3. INSTRUMENTATION CABLES
   TWISTED PAIR OF NO. 18 AWG TINNED COATED CLASS C COPPER CONCENTRIC LAY STRANDED WIRES WITH AN ALUMINUM POLYESTER SHIELD AND COPPER DRAIN. RATED FOR 600V AND COLOR COATED PVC OUTER JACKET.
4. CONNECTORS
   A. PIGTAIL SPLICING #10 AND SMALLER, USE TAPERED SPRING WIRE NUTS. MANUFACTURER SHALL BE IDEAL WING NUT, BUCHANAN B-CAP, T&B PIGGIES, OR EQUAL.
   B. FOR TERMINATION OF #14 CONTROL WIRES TO TERMINALS, USE INSULATED COMPRESSION SPADE TYPE CONNECTORS. MANUFACTURER SHALL BE BURNDY HYDENT, T&B STA-KON, OR EQUAL.
   C. SPLICES AND TERMINALS FOR #8 AND LARGER SHALL BE COPPER COMPRESSION TYPE. MANUFACTURER SHALL BE BURNDY HYDENT OR HYLUG, T&B, STA-CON, OR EQUAL.
   D. FIXTURE CONNECTIONS MANUFACTURER SHALL BE T&B STA-KON SERIES PT-66M, IDEAL CRIMP SLEEVE NO. 410 WITH LONG BARREL, OR EQUAL.

GROUNDING

1. GROUNDING OF ELECTRICAL SYSTEMS AND EQUIPMENT SHALL, AT A MINIMUM, MEET THE REQUIREMENTS OF THE NEC ARTICLE 250 OR SHALL EXCEED ARTICLE 250 AS HEREIN SPECIFIED.
2. ALL CONDUITS SHALL HAVE AN INTERNAL GROUND CONDUCTOR. THIS GROUND CONDUCTOR SHALL BE PROVIDED ALTHOUGH IT MAY NOT BE SHOWN OR SCHEDULED ON THE PLANS.
3. GROUNDING ELECTRODE CONDUCTORS SHALL BE A MINIMUM OF NO. 6 AWG BARE STRANDED COPPER.
4. GROUND RODS SHALL BE 3/4" DIAMETER, 10 FEET LONG, STEEL CORE WITH COPPER MOLTEN WELDED OR ELECTROLYTICALLY BONDED TO EXTERIOR.
5. ALL CONNECTIONS SHALL BE MADE WITH COMPRESSION OR CADWELD CONNECTORS.

ENCLOSURE

1. ENCLOSURES SHALL BE NEMA RATED FOR LOCATION UNLESS OTHERWISE NOTED.
2. WET LOCATIONS OR OUTDOORS, ENCLOSURES SHALL BE NEMA TYPE 4, STAINLESS STEEL.
3. ENCLOSURES SHALL HAVE NAMEPLATE ON THE EXTERIOR IDENTIFYING THE APPLICATION FUNCTION OF THE EQUIPMENT ENCLOSED.

WIRING DEVICES

1. RECEPTACLES MARKED AS GFCI SHALL BE OF THE GROUND FAULT CIRCUIT INTERRPUTER TYPE. MANUIFACTURER SHALL BE GE TYPE TGTR 20, OR EQUAL.
2. SWITCHES
   A. LIGHTING SWITCHES SHALL BE RATED 20 AMPERES AT 277 VAC, TOGGLE OPERATED, PLASTIC ENCLOSED, SINGLE POLE, THREE-WAY OR FOUR-WAY AS SHOWN OR REQUIRED. MANUFACTURER SHALL BE P&S SERIES 20AC1 SEPCIFICATION GRADE, OR EQUAL.
   B. SWITCHES SHALL HAVE SILVER ALLOY CONTACTS AND PROVISIONS FOR SIDE AND BACK WIRING.
   C. EACH SWITCH SHALL BE SUITED FOR FULL-RATED CAPACITY ON TUNGSTEN FILAMENT AND FLOURSCENT LAMP LOADS.
3. FACEPLATE AND COVERS
   A. FINISHED AREAS SHALL HAVE STAINLESS STEEL TYPE 302 ALLOY COVERS.
   B. WET AND CORROSIVE AREAS SHALL BE WEATHERPROOF COVERS WITH GASKETS.

NOTES:
1. PROVIDE 2 #12, 1 #12 GROUND -3/4"C. FOR EACH SINGLE POLE CIRCUIT IN PB-1, UNLESS OTHERWISE NOTED.
2. PROVIDE 5 HANDLE LOCKOFF/ PADLOCK ATTACHMENT ACCESSORIES FOR MCE-1 & DP-1 (FOR LOCKOUT/ TAG OUT PROCEDURES).

PANEL PB-1 ENCLOSURE: NEMA TYPE 12, CABINET MOUNTING: SURFACE

VOLTS: 120 / 240, PHASE: 1, WIRE: 3W, 10,000 AIC, 70A, C/B, FEED: TOP

LOAD SERVED	LOAD (KVA) A	LOAD (KVA) B	BREAKER AMP	BREAKER POLE	CKT	PH	CKT	BREAKER POLE	BREAKER AMP	LOAD (KVA) A	LOAD (KVA) B	LOAD SERVED
EF-1/ L-1	0.7		20	1	1	A	2	1	20	0.3		FIT-100, FIT-110
OXYGEN GENERATOR (T800)		0.4	20	1	3	B	4	1	20		0.3	LIT-200, LIT-300
(9) 1 1/2" PIPES HEAT TRACE	0.5		20	1	5	A	6	1	20	0.2		TIT-800
(2) 2" PIPES HEAT TRACE		0.1	20	1	7	B	8	1	20		0.6	MAIN PLC CONTROL PANEL
(1) 3" PIPE HEAT TRACE	0.4		20	1	9	A	10	1	20	1.3		T-400 HEAT TRACE
RECEPTACLES - INDOOR		0.3	20	1	11	B	12	1	20			SPARE
INDOOR LIGHTS	0.5		20	1	13	A	14	1	20			SPARE
OUTDOOR LIGHT		1.0	20	1	15	B	16	1	20			SPARE
(1) 6" PIPE HEAT TRACE	0.5		20	1	17	A	18	1	20			SPARE
SPARE			20	1	19	B	20	1				BLANK
SPARE			20	1	21	A	22	1				BLANK
BLANK				1	23	B	24	1				BLANK
BLANK				1	25	A	26	1				BLANK
BLANK				1	27	B	28	1				BLANK
BLANK				1	29	A	30	1				BLANK
TOTAL	2.6	1.8								1.8	1.1	
TOTAL CONNECTED KVA:									A:	4.4		
									B	2.9		
									TOTAL	7.3		

LEGEND

- ENCLOSURE LIMITS
- MOTOR, # DENOTES H.P.
- EARTH GROUND
- TRANSFORMER, POWER
- MOLDED CASE CIRCUIT BREAKER
- ELECTRIC UTILITY METER CABINET
- LIGHT SWITCH
- CONDUCTOR SYMBOL
- DUPLEX RECEPTACLE, 120 VAC

ABBREVIATIONS

1FVNR	FULL VOLTAGE, NON-REVERSING (SIZE 1) STARTER
A.F.F.	ABOVE FINISHED FLOOR
A	AMPERES
DTT	DRY TYPE TRANSFORMER
EF	EXHAUST FAN
EMC	ENCLOSED MOTOR CONTROLLER
EUH	ELECTRIC UNIT HEATER
HP	HORSEPOWER
kVA	KILOVOLT-AMPS
kW	KILOWATT
MCC	MOTOR CONTROL CENTER
MCP	MOTOR CIRCUIT PROTECTOR CIRCUIT BREAKER
O.L.	OVERLOAD
PB	PANELBOARD
T-M	THERMAL MAGNETIC CIRCUIT BREAKER
V	VOLTS
VAC	VOLTS AC

RECORD DRAWINGS
TO THE BEST OF OUR KNOWLEDGE, INFORMATION AND BELIEF, THESE RECORD DRAWINGS SUBSTANTIALLY REPRESENT THE PROJECT AS CONSTRUCTED.

(RECORD DRAWING: MADE FROM DRAWING NO. 1, TRACER NO. B0046918/0001/00003/DWG/CONTRACT/46918E01.DWG, DATED 7/18/12) DATE_____BY_____

CITY: SYRACUSE, NY DIV/GROUP:ENV/CADD DB: GMS KFS GMS K.SARTORI PIC:J.VOGELEY PM: W.MCCUNE TM: W.MCCUNE LYR:ON=*;OFF=*REF*
G:\ENVCAD\SYRACUSE\ACT\B0046918\00030\005\DWG\CONTRACT\RECORD\46918E01.dwg LAYOUT: E01 SAVED: 7/10/2013 3:22 PM ACADVER: 18.1S (LMS TECH) PAGESETUP: DWG TO PDF PLOTSTYLETABLE: PLTCONT.CTB PLOTTED: 9/17/2013 9:11 AM BY: GETTS, BRIAN
XREFS: 46918X00
IMAGES:

THIS BAR REPRESENTS ONE INCH ON THE ORIGINAL DRAWING: USE TO VERIFY FIGURE REPRODUCTION SCALE

No.	Date	Revisions	By	Ckd

THIS DRAWING IS THE PROPERTY OF THE ARCADIS ENTITY IDENTIFIED IN THE TITLE BLOCK AND MAY NOT BE REUSED OR ALTERED IN WHOLE OR IN PART WITHOUT THE EXPRESS WRITTEN PERMISSION OF SAME.

Professional Engineer's Name: THOMAS P. ARMSTRONG JR.
Professional Engineer's No.: 085236
State: NY | Date Signed: | Project Mgr.: WTM
Designed by: AMR | Drawn by: KLS | Checked by: TEM/AMR

ARCADIS
ARCADIS OF NEW YORK, INC.

FORMER TAPPAN TERMINAL SITE • HASTINGS ON HUDSON, NEW YORK
GROUNDWATER REMEDIATION SYSTEM

ONE-LINE

ELECTRICAL

ARCADIS Project No. B0046918.0003.00005
Date SEPTEMBER 2013

ARCADIS
6723 TOWPATH RD
PO BOX 66
SYRACUSE, NY 13214-0066
TEL. 315.446.9120

E01

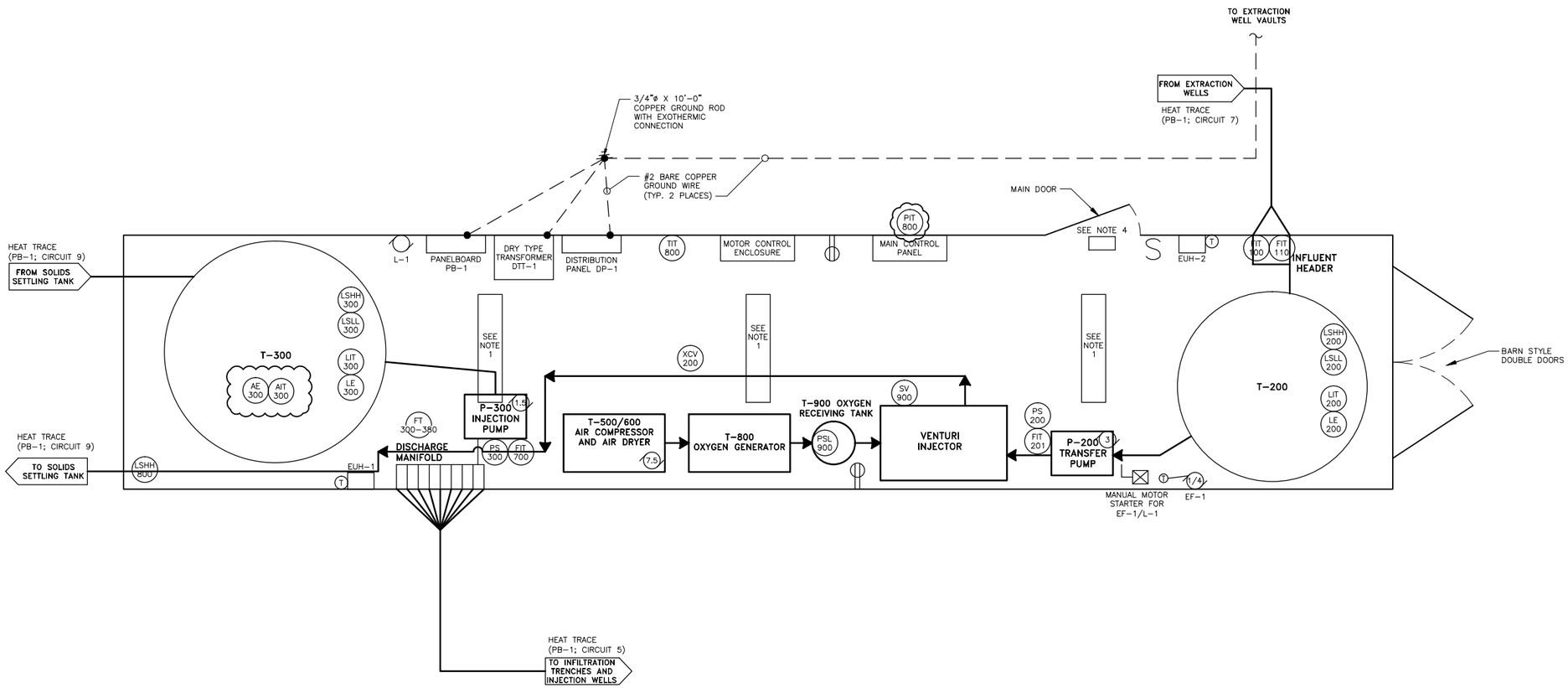

NOTES:

1. PROVIDE FLUORESCENT LIGHT FIXTURE RATED FOR DAMP LOCATIONS WITH (3), 32-WATT LAMPS. SURFACE-MOUNT FIXTURE ON CEILING (TYP. 3 PLACES)
2. REFER TO SHEET E01 ONELINE DIAGRAM FOR CONDUIT AND WIRE INFORMATION AND FOR PANELBOARD SCHEDULE AND CIRCUIT NUMBERS.
3. RECEPTACLES SHALL BE SURFACE-MOUNTED.
4. PROVIDE 175W METAL HALLIDE OUTDOOR LIGHT FIXTURE WITH INTEGRAL PHOTOCELL CONTROL. WALL-MOUNT FIXTURE SO BOTTOM OF FIXTURE IS 8'-0" AFF.
5. REFER TO SHEET E04 & E05 FOR INSTRUMENTATION CONDUIT AND WIRE REQUIREMENTS.

EUH NOTES:

(TYPICAL 2 PLACES)

TYPE:
SUSPENDED WALL

MOUNT:
BOTTOM 5'-6" AFF.

MANUFACTURER:
CHROMALOX, MODEL LUH-12-43-32; OR EQUAL.

ELECTRICAL:
480V/3ø, 10 KW

ACCESSORIES:
INTEGRAL THERMOSTAT
DISCONNECT SWITCH
WALL MOUNT KIT

EF-1 NOTES:

TYPE:
WALL-MOUNTED PROPELLOR FAN

MOUNT:
BOTTOM 5'-6" AFF.

AIR FLOW:
1600 CFM

E.S.P.:
0.25" W.C.

MANUFACTURER:
LOREN COOK, MODEL AWD 16A17D; OR EQUAL.

ELECTRICAL:
120V/1ø, 1/4 HP

ACCESSORIES:
DISCONNECT SWITCH

THERMOSTAT:
HONEYWELL, MODEL T631C

L-1 NOTES:

TYPE:
DRAINABLE COMBINATION LOUVER

MOUNT:
BOTTOM 5'-6" AFF.

AIR FLOW:
1600 CFM

MANUFACTURER:
RUSKIN, MODEL ELF6375DAX

ELECTRICAL (MOTORIZED DAMPER):
120V/1ø

CONTROL:
DAMPER OPENS WHEN EF-1 IS ENERGIZED VIA THERMOSTAT.

PIPING HEAT TRACE NOTES:

TYPE:
SELF-REGULATING

MANUFACTURER:
DEKORON, MODEL 2310-10C00

ELECTRICAL:
120V/1ø

LOCATIONS: REFER TO SITE PLANS FOR SPECIFIC LOCATIONS AND LENGTHS.

TANK HEAT TRACE NOTES:

TYPE:
SELF-REGULATING

MANUFACTURER:
ASSMAN, MODEL ICT-5500

ELECTRICAL:
120V/1ø

LOCATION: TANK T-400 (OUTDOOR TANK; REFER TO SHEET E03)

RECORD DRAWINGS
TO THE BEST OF OUR KNOWLEDGE, INFORMATION AND BELIEF, THESE RECORD DRAWINGS SUBSTANTIALLY REPRESENT THE PROJECT AS CONSTRUCTED.

(RECORD DRAWING: MADE FROM DRAWING NO. 1, TRACER NO. B0046918/0001/00003/DWG/CONTRACT/46918E02.DWG, DATED 7/18/12) DATE_____BY_____

CITY: SYRACUSE, NY DIV/GROUP: ENV/CADD DB: GMS KFS GMS K.SARTORI PIC: J.VOGELEY PM: W.MCCUNE TM: J.ROBERTSON LYR:ON=*;OFF=*REF*
G:\ENVCAD\SYRACUSE\ACT\B0046918\0003\00005\DWG\CONTRACT\RECORD\46918E02.dwg LAYOUT: E02 SAVED: 7/10/2013 3:15 PM ACADVER: 18.1S (LMS TECH) PAGESETUP: DWG TO PDF PLOTSTYLETABLE: PLTCONT.CTB PLOTTED: 9/17/2013 9:11 AM BY: GETTS, BRIAN
XREFS: 46918X00 IMAGES:

THIS BAR REPRESENTS ONE INCH ON THE ORIGINAL DRAWING: USE TO VERIFY FIGURE REPRODUCTION SCALE

No.	Date	Revisions	By	Ckd

THIS DRAWING IS THE PROPERTY OF THE ARCADIS ENTITY IDENTIFIED IN THE TITLE BLOCK AND MAY NOT BE REUSED OR ALTERED IN WHOLE OR IN PART WITHOUT THE EXPRESS WRITTEN PERMISSION OF SAME.

Professional Engineer's Name: THOMAS P. ARMSTRONG JR.
Professional Engineer's No.: 085236
State: NY | Date Signed: | Project Mgr.: WTM
Designed by: AMR | Drawn by: KLS | Checked by: TEM/AMR

ARCADIS
ARCADIS OF NEW YORK, INC.

FORMER TAPPAN TERMINAL SITE • HASTINGS ON HUDSON, NEW YORK
GROUNDWATER REMEDIATION SYSTEM

ELECTRICAL EQUIPMENT LAYOUT

ELECTRICAL

ARCADIS Project No. B0046918.0003.00005
Date SEPTEMBER 2013
ARCADIS
6723 TOWPATH RD
PO BOX 66
SYRACUSE, NY 13214-0066
TEL. 315.446.9120

E02

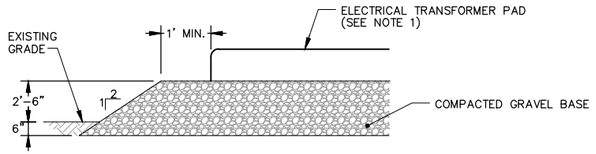

NOTE:

1. PRE-CAST ELECTRICAL TRANSFORMER PAD PROVIDED BY ELECTRICAL CONTRACTOR AS SPECIFIED BY ELECTRICAL UTILITY COMPANY.

ELECTRICAL TRANSFORMER CONCRETE PAD ELEVATION DETAIL

NOT TO SCALE

NOTES:

1. REFER TO SHEET E01 FOR 480 VOLT AND 120 VOLT CONDUIT AND WIRE REQUIREMENTS.
2. REFER TO SHEET E04 FOR THE INSTRUMENTATION CONDUIT AND WIRING REQUIREMENTS.
3. REFER TO SHEET E05 FOR THE SIGNAL LIST.

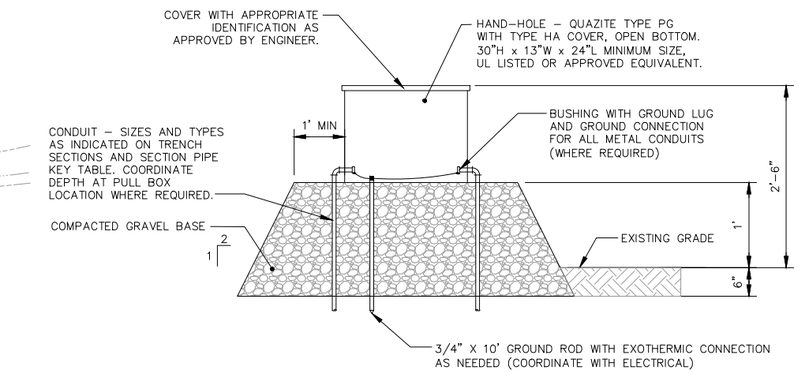

ELECTRICAL HAND-HOLE DETAIL (TYP. OF 4)

NOT TO SCALE

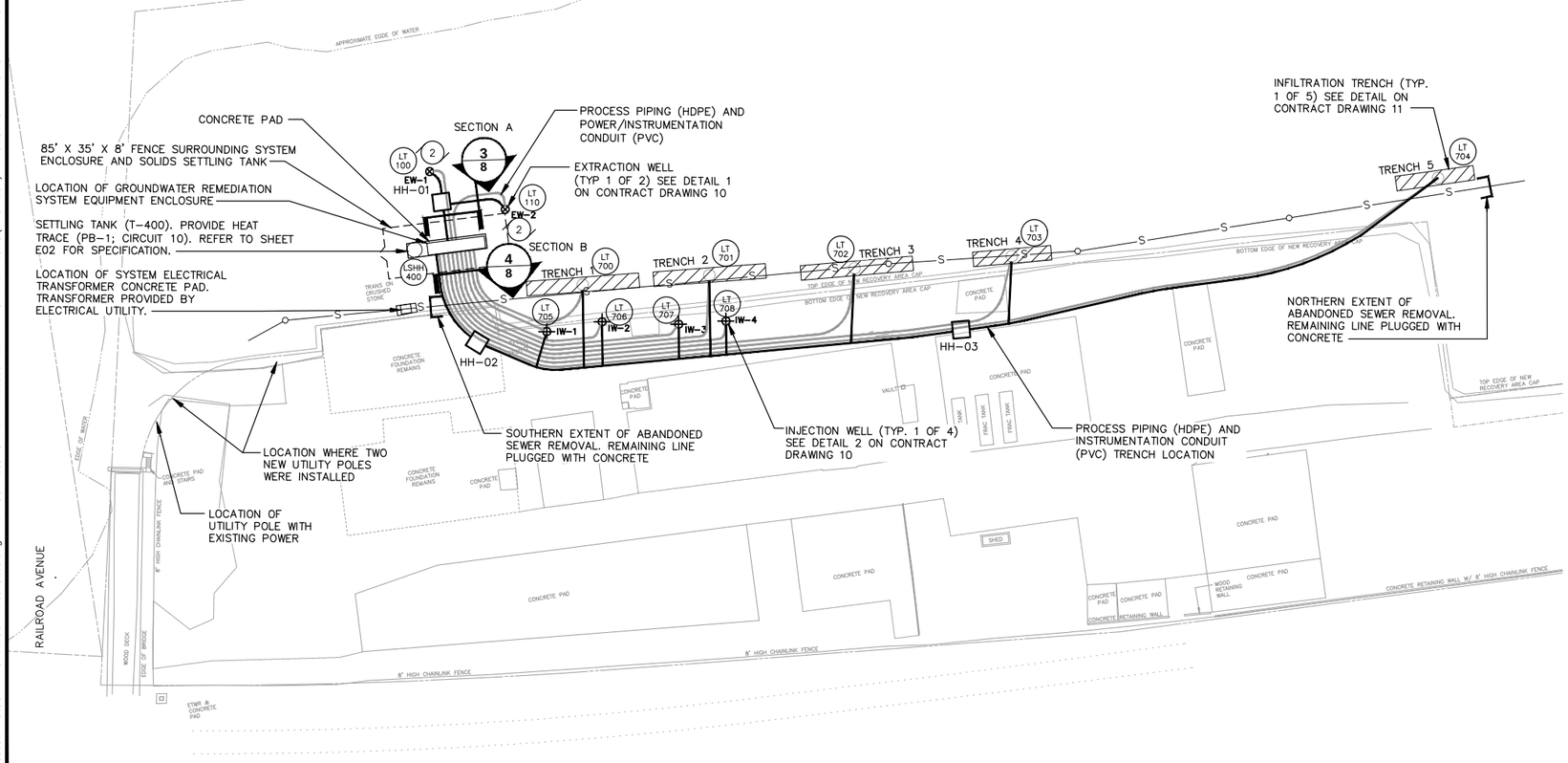

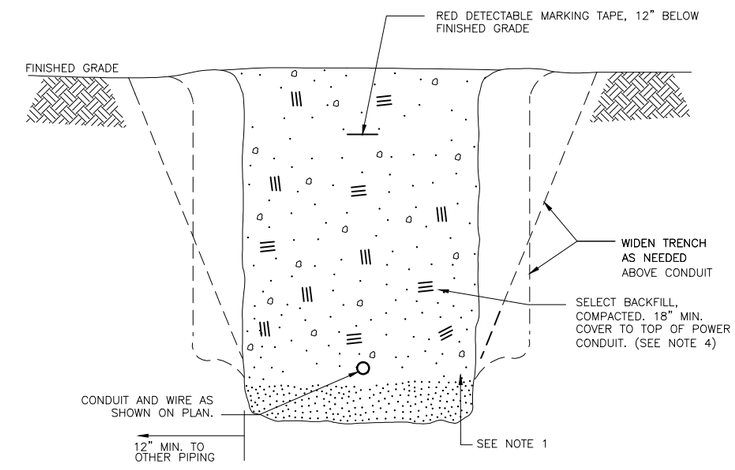

NOTES:

1. SPACING SHALL BE 6" MIN. FROM CONDUIT TO TRENCH WALL.
2. WHERE MORE THAN ONE CONDUIT IS INCLUDED IN TRENCH, PROVIDE THE FOLLOWING SPACING:
   - 3" MIN. BETWEEN POWER CONDUITS
   - 3" MIN. BETWEEN CONTROL CONDUITS
   - 6" MIN. BETWEEN POWER AND CONTROL CONDUITS

NOTES (cont.):

3. CONDUIT SHALL BE BURIED A MINIMUM OF 30" BELOW GRADE.

ELECTRICAL TRENCH DETAIL

NOT TO SCALE

RECORD DRAWINGS

TO THE BEST OF OUR KNOWLEDGE, INFORMATION AND BELIEF, THESE RECORD DRAWINGS SUBSTANTIALLY REPRESENT THE PROJECT AS CONSTRUCTED.

(RECORD DRAWING: MADE FROM DRAWING NO. 1, TRACER NO. B0046918/0001/00003/DWG/CONTRACT/46918E03.DWG, DATED 7/18/12) DATE_____BY_____

CITY: SYRACUSE, NY DIV/GROUP: ENV/CADD DB: GMS KFS GMS K.SARTORI PIC: J.VOGELEY PM: W.MCCUNE TM: J.ROBERTSON LYR:ON=*;OFF=*REF*
G:\ENVCAD\SYRACUSE\ACT\B0046918\0003\00005\DWG\CONTRACT\RECORD\46918E03.dwg LAYOUT: E03 SAVED: 7/11/2013 4:21 PM ACADVER: 18.1S (LMS TECH) PAGESETUP: DWG TO PDF PLOTSTYLETABLE: PLTCONT.CTB PLOTTED: 9/17/2013 9:11 AM BY: GETTS, BRIAN
XREFS: 46918X01 46918X00
IMAGES:

50' 0 50' 100'
1"=50'

THIS BAR REPRESENTS ONE INCH ON THE ORIGINAL DRAWING:

USE TO VERIFY FIGURE REPRODUCTION SCALE

No.	Date	Revisions	By	Ckd

THIS DRAWING IS THE PROPERTY OF THE ARCADIS ENTITY IDENTIFIED IN THE TITLE BLOCK AND MAY NOT BE REUSED OR ALTERED IN WHOLE OR IN PART WITHOUT THE EXPRESS WRITTEN PERMISSION OF SAME.

Professional Engineer's Name: THOMAS P. ARMSTRONG JR.
Professional Engineer's No.: 085236
State: NY | Date Signed: | Project Mgr.: WTM
Designed by: AMR | Drawn by: KLS | Checked by: TEM/AMR

ARCADIS

ARCADIS OF NEW YORK, INC.

FORMER TAPPAN TERMINAL SITE • HASTINGS ON HUDSON, NEW YORK
GROUNDWATER REMEDIATION SYSTEM

ELECTRICAL SITE PLAN

ELECTRICAL

ARCADIS Project No. B0046918.0003.00005
Date SEPTEMBER 2013

ARCADIS
6723 TOWPATH RD
PO BOX 66
SYRACUSE, NY 13214-0066
TEL. 315.446.9120

E03

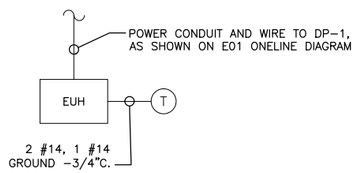

RISER DIAGRAM ELECTRIC UNIT HEATER (EUH)

(TYP.)

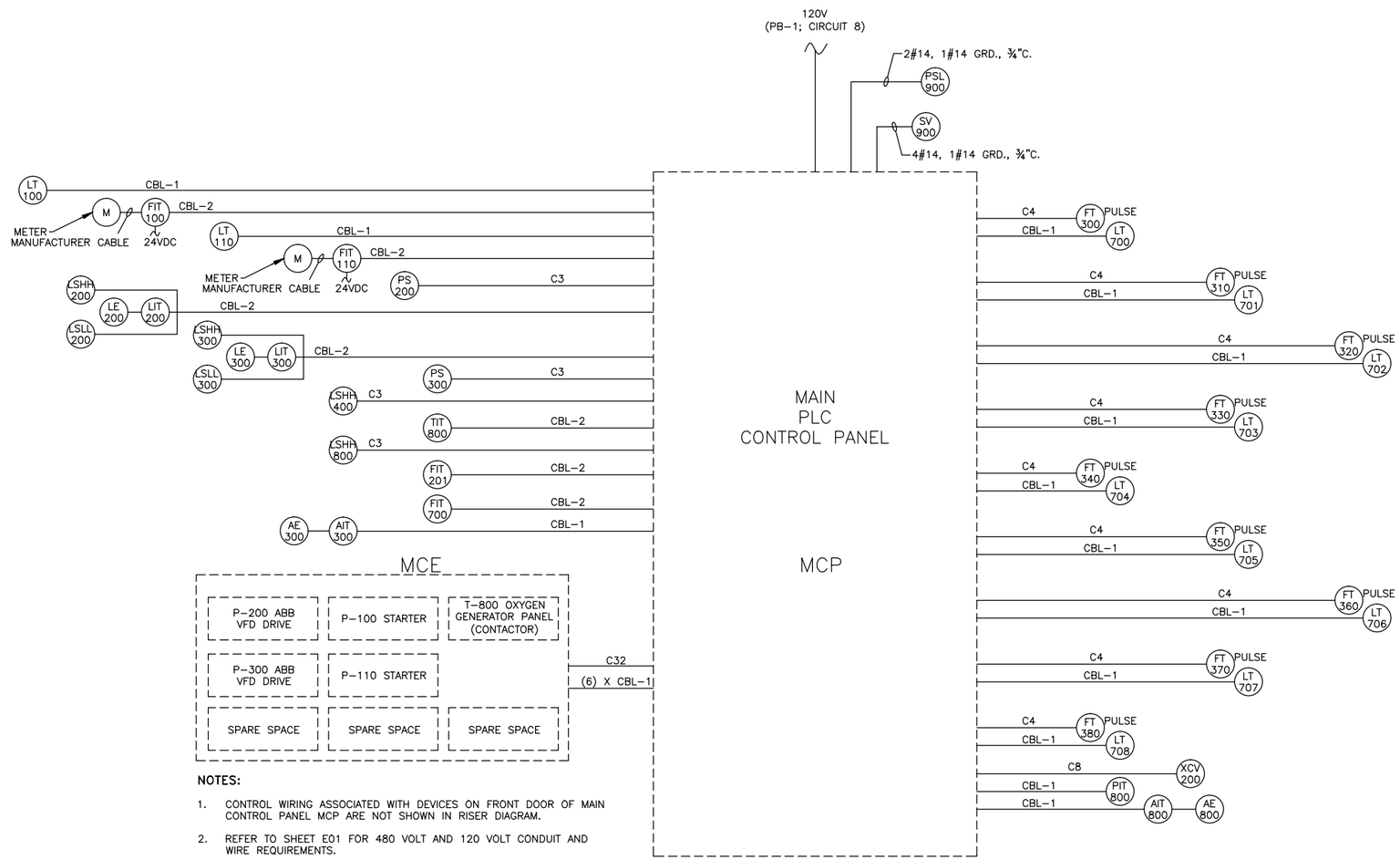

RISER DIAGRAM INSTRUMENTATION

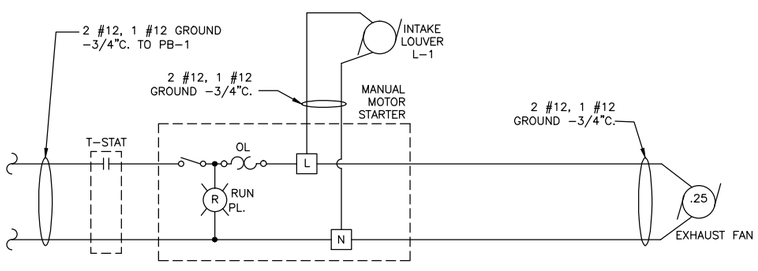

EXHAUST FAN SCHEMATIC (EF-1)

NOTES:

1. CONTROL WIRING ASSOCIATED WITH DEVICES ON FRONT DOOR OF MAIN CONTROL PANEL MCP ARE NOT SHOWN IN RISER DIAGRAM.
2. REFER TO SHEET E01 FOR 480 VOLT AND 120 VOLT CONDUIT AND WIRE REQUIREMENTS.
3. REFER TO SHEET E05 FOR THE SIGNAL LIST.
4. HAND-OFF-AUTO CONTROL WILL BE VIRTUAL FROM THE HUMAN MACHINE INTERFACE (HMI) SCREEN ONLY.
5. FLOW METERS FIT-100, FIT-110 AND FIT-700 SHALL BE SELECTED WITH 24VDC POWER REQUIREMENT, 4-20mA ANALOG OUTPUT, PULSE OUTPUT, AND REMOTE RESET.
6. UPS SHALL BE SUPPLIED WITH MAIN PLC CONTROL PANEL.
7. HMI SHALL BE AUTOMATION DIRECT C-MORE. HMI SHALL BE MOUNTED ON FRONT OF MCP.
8. A CELLULAR MODEM SHALL BE INSTALLED IN THE MAIN CONTROL PANEL. CELLULAR MODEM SHALL BE RAVEN X TYPE AND ANTENNA SHALL BE PROVIDED AND INSTALLED ON THE OUTSIDE WALL OF THE BUILDING.
9. P-100/P-110 STARTERS SHALL BE EACH CONTROLLED BY A DRY CONTACT "RUN" COMMAND FROM THE MCP. THE STARTERS SHALL EACH PROVIDE A DRY CONTACT FOR MONITORING "RUNNING" AND "TROUBLE/OVERLOAD".
10. P-200/P-300 VFDs SHALL BE EACH CONTROLLED BY A DRY CONTACT "RUN" COMMAND FROM THE MCP. SPEED CONTROL FROM THE MCP SHALL BE PROVIDED AND RECEIVED BY THE VFDs AS 4-20mA SIGNAL. SPEED REFERENCE/FEEDBACK SHALL BE PROVIDED FROM THE VFDs AS A 4-20mA SIGNAL TO THE MCP. THE VFDs SHALL EACH PROVIDE A DRY CONTACT FOR MONITORING "RUNNING" AND "TROUBLE".

MCP CABLES, WIRES AND CONDUITS SCHEDULE

CBL-1	"27325AS, 2 CONDUCTOR BELDEN CABLE, 1 #14 GND, 3/4""C. "
(6) X CBL-1	"(6) 27325AS, 2 CONDUCTOR BELDEN CABLE, 1 #14 GND, 3/4""C. "
CBL-2	5305FE BELDEN 7 CONDUCTOR CABLE., 3/4"C.
C3	2#14, 1#14 GND. 3/4" C.
C4	3#14, 1#14 GND. 3/4" C.
C8	6#14, 1#14 GND. 3/4" C.
C32	32#14, 1#14 GND. 1-1/2" C.

RECORD DRAWINGS
TO THE BEST OF OUR KNOWLEDGE, INFORMATION AND BELIEF, THESE RECORD DRAWINGS SUBSTANTIALLY REPRESENT THE PROJECT AS CONSTRUCTED.

(RECORD DRAWING: MADE FROM DRAWING NO. 1, TRACER NO. B0046918/0001/00003/DWG/CONTRACT/46918E04.DWG, DATED 7/18/12) DATE_____BY_____

NOT TO SCALE

THIS BAR REPRESENTS ONE INCH ON THE ORIGINAL DRAWING: USE TO VERIFY FIGURE REPRODUCTION SCALE

No.	Date	Revisions	By	Ckd

THIS DRAWING IS THE PROPERTY OF THE ARCADIS ENTITY IDENTIFIED IN THE TITLE BLOCK AND MAY NOT BE REUSED OR ALTERED IN WHOLE OR IN PART WITHOUT THE EXPRESS WRITTEN PERMISSION OF SAME.

Professional Engineer's Name: THOMAS P. ARMSTRONG JR.
Professional Engineer's No.: 085236
State: NY | Date Signed: | Project Mgr.: WTM
Designed by: AMR | Drawn by: KLS | Checked by: TEM/AMR

ARCADIS
ARCADIS OF NEW YORK, INC.

FORMER TAPPAN TERMINAL SITE • HASTINGS ON HUDSON, NEW YORK
GROUNDWATER REMEDIATION SYSTEM

RISER DIAGRAMS

ELECTRICAL

ARCADIS Project No. B0046918.0003.00005
Date SEPTEMBER 2013

ARCADIS
6723 TOWPATH RD
PO BOX 66
SYRACUSE, NY 13214-0066
TEL. 315.446.9120

E04

CITY: SYRACUSE, NY DIV/GROUP:ENV/CADD DB: GMS KFS GMS K.SARTORI PIC:J.VOGELEY PM: W.MCCUNE TM: J.ROBERTSON LYR:ON=*;OFF=*REF*
G:\ENVCAD\SYRACUSE\ACT\B0046918\0003\00005\DWG\CONTRACT\RECORD\46918E04.dwg LAYOUT: E04 SAVED: 7/10/2013 3:22 PM ACADVER: 18.1S (LMS TECH) PAGESETUP: DWG TO PDF PLOTSTYLETABLE: PLTCONT.CTB PLOTTED: 9/17/2013 9:12 AM BY: GETTS, BRIAN
XREFS: 46918X00
IMAGES:

INSTARUMENT LIST, SPECIFICATION AND I/O COUNTS							
TAG NUMBER	SPECIFICATIONS	DC-DI	DC-DO	AC-DI	AC-DO	AI	AO
LT100	4-20 MA 2 WIRES					1	
LT110	4-20 MA 2 WIRES					1	
LT700	4-20 MA 2 WIRES					1	
LT701	4-20 MA 2 WIRES					1	
LT702	4-20 MA 2 WIRES					1	
LT703	4-20 MA 2 WIRES					1	
LT704	4-20 MA 2 WIRES					1	
LT705	4-20 MA 2 WIRES					1	
LT706	4-20 MA 2 WIRES					1	
LT707	4-20 MA 2 WIRES					1	
LT708	4-20 MA 2 WIRES					1	
PS200	SPDT	1					
PSL900	SPDT	1					
PS300	SPDT	1					
FIT100	24VDC POWER, 4-20 MA, PULSE OUT, REMOTE RESET.	1				1	
FIT110	24VDC POWER, 4-20 MA, PULSE OUT, REMOTE RESET.	1				1	
FIT201	24VDC POWER, 4-20 MA, PULSE OUT, REMOTE RESET.	1				1	
FIT700	24VDC POWER, 4-20 MA, PULSE OUT, REMOTE RESET.	1				1	
PIT800	24 VDC POWER, LOOP POWERED					1	
LIT200	24VDC POWER, 4-20 MA					1	
LSLL200	SPDT, N.O.	1					
LSHH200	SPDT, N.C.	1					
LIT300	24VDC POWER, 4-20 MA					1	
AIT300	120 VAC POWER, 4-20 MA SOURCE POWERED					1	
LSLL300	SPDT, N.O.	1					
LSHH300	SPDT, N.C.	1					
LSHH400	SPDT, N.C.	1					
LSHH800	SPDT, N.C.	1					
TIT800	4-20 MA					1	
FT300-FT380	REED SWITCH OUTPUT	9					
XCV200	120VAC, (2)LS			2	1		
SV-900					1		
P200 DRIVE				2	1	1	1
P300 DRIVE				2	1	1	1
P100 STARTER				3	1		
P110 STARTER				3	1		
T-500 COMP. STARTER				3	1		
OX GEN T800				3	1		
AUTO DIALER			4				
MIN. NUMBER OF SPARES		8	8	4	4	8	2
	TOTAL ESTIMATE I/O :	**30**	**12**	**22**	**12**	**30**	**4**

SEE NOTE 7

NOTES:

1. PROVIDE ALLEN BRADLEY COMPACT LOGIX SYSTEM UTILIZING THE 1769–L32E CONTROLLER AND EXPANSION MODULES TO ACCOMMODATE THE I/O LISTED ON THE TABLE, PLUS 10%.
2. PROVIDE 120 VAC POWER DISTRIBUTION, CIRCUIT BREAKER, RELAYS, AND ANCILLARY EQUIPMENT WITHIN MAIN CONTROL PANEL AS REQUIRED.
3. SIZE MAIN CONTROL PANEL TO ACCOMMODATE EQUIPMENT SHOWN IN THE DRAWINGS TO BE INCLUDED WITHIN THE PANEL, PLUS 30% SPACE. ALL SYSTEM ELECTRICAL AND CONTROL PANELS MUST USE UL LISTED COMPONENTS AND BE UL LISTED.
4. PROVIDE ACCURATE AS–BUILT DRAWINGS UPON DELIVERY OF THE MAIN CONTROL PANEL.
5. INSTRUMENT DESCRIPTION AND MANUFACTURER INFORMATION CAN BE FOUND ON DRAWING 12.
6. SHOP DRAWING PANEL DESIGN SHALL BE PROVIDED FOR REVIEW/APPROVAL PRIOR TO PANEL CONSTRUCTION.
7. VALVE WILL GO TO DOUBLE PULL DOUBLE THROW (DPDT) RELAY THAT WILL SEND POWER TO THE VALVE TO CLOSE AND SEND POWER FOR THE VALVE TO OPEN.

RECORD DRAWINGS
TO THE BEST OF OUR KNOWLEDGE, INFORMATION AND BELIEF, THESE RECORD DRAWINGS SUBSTANTIALLY REPRESENT THE PROJECT AS CONSTRUCTED.

(RECORD DRAWING: MADE FROM DRAWING NO. 1, TRACER NO. B0046918/0001/00003/DWG/CONTRACT/46918E05.DWG, DATED 7/18/12) DATE_____BY_____

NOT TO SCALE

THIS BAR REPRESENTS ONE INCH ON THE ORIGINAL DRAWING: USE TO VERIFY FIGURE REPRODUCTION SCALE

No.	Date	Revisions	By	Ckd

THIS DRAWING IS THE PROPERTY OF THE ARCADIS ENTITY IDENTIFIED IN THE TITLE BLOCK AND MAY NOT BE REUSED OR ALTERED IN WHOLE OR IN PART WITHOUT THE EXPRESS WRITTEN PERMISSION OF SAME.

Professional Engineer's Name: THOMAS P. ARMSTRONG JR.
Professional Engineer's No.: 085236
State: NY | Date Signed: | Project Mgr.: WTM
Designed by: AMR | Drawn by: KLS | Checked by: TEM/AMR

ARCADIS
ARCADIS OF NEW YORK, INC.

FORMER TAPPAN TERMINAL SITE • HASTINGS ON HUDSON, NEW YORK
GROUNDWATER REMEDIATION SYSTEM

SIGNAL LIST

ELECTRICAL

ARCADIS Project No. B0046918.0003.00005
Date SEPTEMBER 2013

ARCADIS
6723 TOWPATH RD
PO BOX 66
SYRACUSE, NY 13214-0066
TEL. 315.446.9120

E05

CITY: SYRACUSE, NY DIV/GROUP:ENV/CADD DB: GMS KFS GMS K.SARTORI PIC:J.VOGELEY PM: W.MCCUNE TM: J. ROBERTSON LYR:ON=*;OFF=*REF*
G:\ENVCAD\SYRACUSE\ACT\B0046918\0003\00005\DWG\CONTRACT\RECORD\46918E05.dwg LAYOUT: E05 SAVED: 7/10/2013 3:22 PM ACADVER: 18.1S (LMS TECH) PAGESETUP: DWG TO PDF PLOTSTYLETABLE: PLTCONT.CTB PLOTTED: 9/17/2013 9:12 AM BY: GETTS, BRIAN
XREFS:
IMAGES:
46918X00

Appendix C

Standard Operating Procedures

SOP 1: Oxygen Enriched Environment Equipment Enclosure Entry

1. Through daily system monitoring and observation of the equipment enclosure oxygen sensor reading, the indication of an oxygen-enriched environment will be determined. If an oxygen-enriched environment is observed, the entire system will be shut down immediately and a site visit will be conducted as soon as possible. This Standard Operating Procedure (SOP) presents the procedures that will be followed to enter the building and investigate the source of the oxygen leak.

2. Upon arriving on site, notify the Operation, Maintenance, and Monitoring (OMM) Engineer, confirm the current oxygen reading, and that the system is shut down.

3. The following minimum personal protective equipment requirements (Level D) will be worn before entering the equipment enclosure: steel-toe boots, safety glasses, reflective vest, and hard hat.

4. Open the barn style doors and man door of the equipment enclosure and allow 5 to 10 minutes for the air to vent to the outer atmosphere.

5. Enter the equipment enclosure and check the reading on the oxygen sensor to see if it is reading an appropriate value once the enclosure has been vented. A value that does not make sense (an extreme high or low value) may indicate that the sensor requires calibration or a component of the sensor is defective.

6. Be aware of any unusual odors. If you begin to feel faint at any point, immediately evacuate the building.

7. Verify that the lids of T-200 and T-300 are securely closed upon entering the equipment enclosure. If the lids are not securely closed, fugitive oxygen may have entered into the equipment enclosure instead of being vented outside as designed.

8. Check the pressure reading of the contents of T-900. No or little pressure in T-900 may indicate a leak in the oxygen supply system connections and/or piping.

9. After thoroughly venting the equipment enclosure and eliminating a defective oxygen sensor and/or open process tank lids, a leak test of the oxygen supply system shall be performed.

10. If T-900 is already up to pressure and SV-900 is closed, the leak is most likely downstream of SV-900. Perform a confirmatory leak test using a soapy water solution (Leak Tec or other) on all joints and connections downstream of SV-900.

11. If T-900 is not pressurized or is indicating little pressure accumulation, start up the oxygen supply system only, with SV-900 remaining closed, to determine if pressure can accumulate in T-900.

12. While the oxygen supply system is operating, perform a leak test using a soapy water solution (Leak Tec or other) on all joints and connections upstream of SV-900.
13. Once the source of the leak is identified, repair the leak. If the leak is not repairable on the spot, procure the necessary parts and fix the leak as soon as possible.
14. Do not restart the system for normal operation until the source of the oxygen leak is identified and fixed.
15. Note all pertinent information related to the response and actions taken in the System Operator field log book, as well as on any applicable OMM logs.

Former Tappan Terminal Site
Hastings on Hudson, New York
Groundwater Remediation System

SOP 2: System Pre-Startup

Operator: _____ Date: _____ Time: _____
Reason for Previous Shut-Down: _____
Corrective Actions Taken: _____

Step	System ID	Equipment ID	Tasks to Perform	Initial /Notes
1	EW-1	LT-100	Verify that level transmitter is hanging free of obstruction. Verify that level transmitter high and low level alarm set points have been established and tested/ calibrated with respect to depth to water and pump intake using atmospheric pressure transmitter PIT-800 (barometer) reading.	
2	EW-1	P-100	Verify that the Hand-Off-Auto (HOA) control setting is set to Off.	
3	EW-2	LT-110	Verify that level transmitter is hanging free of obstruction. Verify that level transmitter high and low level alarm set points have been established and tested/ calibrated with respect to depth to water and pump intake using atmospheric pressure transmitter PIT-800 (barometer) reading.	
4	EW-2	P-110	Verify that the HOA control setting is set to Off.	
5	System Influent	V-101 and V-108	Verify that globe valves are fully open to allow for free flow (globe valves may need to be partially closed and used for throttling flow from the extraction wells). **Note: During initial system startup, the globe valves will be adjusted to balance flow from the extraction wells and discharge from T-200. After initial system startup, do not change globe valve setting unless absolutely necessary.**	
6	System Influent	V-102 and V-109	Verify that pressure gauge valves are fully open to allow for free flow to pressure gauge.	
7	System Influent	V-103, V-110, and V-115	Verify that sample tap valves are fully closed	
8	System Influent	V-106 and V-113	Verify that flow meter bypass valves are fully closed.	
9	System Influent	V-104, V-105, V-111, and V-112	Verify that flow meter isolation valves are fully open to allow for free flow.	
10	System Influent	FIT-100	Verify that an acceptable low-flow alarm initial set point and system response delay have been established. Record totalized volume.	
11	System Influent	FIT-110	Verify that an acceptable low-flow alarm initial set point and system response delay have been established. Record totalized volume.	

Step	System ID	Equipment ID	Tasks to Perform	Initial /Notes
12	System Influent	V-116	Verify that T-200 isolation valve is fully open for free flow.	
13	T-200	LSLL-200	Verify that level switch is hanging free of obstruction. Verify that an acceptable low-level alarm set point has been established.	
14	T-200	LSHH-200	Verify that level switch is hanging free of obstruction. Verify that an acceptable high-level alarm set point has been established.	
15	T-200	LE/LIT-200	Verify that level transmitter is hanging free of obstruction. Verify that acceptable low- and high-level alarm initial set points have been established, low- and high-level alarm initial set points coincide with the level switches in the tank, and the level set point to be maintained in the tank is programmed (functionality with variable frequency drive [VFD] to maintain set level in T-200 will be fine-tuned, if needed, during initial system startup).	
16	T-200	T-200 Man Way	Once configuration and functionality of T-200 internal components are established, secure man way cover so any vapors that may accumulate in the tank during operation are vented to the atmosphere.	
17	T-200 Discharge	V-117	Verify that T-200 discharge valve is fully open for free flow.	
18	T-200 Discharge	P-200	Verify that the HOA control setting is set to Off (functionality with VFD to maintain set level in T-200 will be established during initial system startup).	
19	P-200 Discharge	V-118	Verify that pressure switch valve is fully open to allow for free flow to pressure switch.	
20	P-200 Discharge	PS-200	Verify that acceptable high-pressure alarm initial set point has been established.	
21	P-200 Discharge	V-120	Verify that globe valve is fully open to allow for free flow (globe valve may need to be partially closed and used for throttling flow from P-200). **Note: During initial system startup, the globe valves will be adjusted to balance flow from the extraction wells and discharge from T-200. After initial system startup, do not change globe valve setting unless absolutely necessary.**	
22	P-200 Discharge	V-121 and V-122	Verify that T-200 recirculation piping valves are fully closed.	
23	P-200 Discharge	FIT-200	Verify that an acceptable low-flow alarm initial set point and system response delay have been established. Record totalized volume.	
24	P-200 Discharge	Venturi Bypass Valve	Verify that Venturi bypass piping valve is fully closed.	
25	P-200 Discharge	V-123	Verify that pressure gauge valve is fully open to allow for free flow to pressure gauge.	
26	Oxygen Amendment	T-500	Verify that the hand switch control setting is set to Off.	
27	Oxygen	V-124	Verify that valve is fully open to allow for free flow to	

Step	System ID	Equipment ID	Tasks to Perform	Initial /Notes
	Amendment		oxygen generator.	
28	Oxygen Amendment	T-800	Verify that the HOA control setting is set to Off.	
29	Oxygen Amendment	V-125	Verify that valve is fully open to allow for free flow of oxygen to the pressure gauge and pressure switch.	
30	Oxygen Amendment	PSL-900	Verify that acceptable low-pressure alarm initial set point has been established.	
31	Oxygen Amendment	V-126	Verify that oxygen regulator is fully open (no flow of oxygen) and no reading is indicated on the pressure gauge.	
32	Oxygen Amendment	V-127	Verify that valve is fully open to allow for free flow of oxygen to the pressure gauge.	
33	Oxygen Amendment	V-128	Verify that valve is fully open to allow for free flow of oxygen.	
34	Oxygen Amendment	V-130	Verify that valve is fully open to allow for free flow of oxygen.	
35	Oxygen Amendment	SV-900	Verify that the HOA control setting is set to Off.	
36	T-400 Influent	V-131	Verify that pressure gauge valve is fully open to allow for free flow to pressure gauge.	
37	T-400 Influent	V-132	Verify that the HOA control setting is set to Off. Verify functionality of battery backup and that valve will power fail to the closed position.	
38	T-400	LSHH-400	Verify that level switch is hanging free of obstruction. Verify that an acceptable high-high level alarm set point has been established.	
39	T-400	T-400 Man Way	Once configuration and functionality of T-400 internal components is completed, secure man way cover to limit the amount of oxygen off gassing to the atmosphere.	
40	T-400	Solids Settling Tank Heat Trace	Verify the operation of the solids settling tank heat trace (heat trace intensity will be adjusted dependent upon ambient temperature and maintaining a moderate water temperature within the tank).	
41	T-300	LSLL-300	Verify that level switch is hanging free of obstruction. Verify that an acceptable low-level alarm set point has been established.	
42	T-300	LSHH-300	Verify that level switch is hanging free of obstruction. Verify that an acceptable high level alarm set point has been established.	
43	T-300	LE/LIT-300	Verify that level transmitter is hanging free of obstruction. Verify that acceptable low- and high-level alarm initial set points have been established, low- and high-level alarm initial set points coincide with the level switches in the tank, and the level set point to be maintained in the tank is programmed (functionality with VFD to maintain set level in T-300 will be fine-tuned, if needed, during initial system startup).	
44	T-300	AE/AIT-300	Verify that dissolved oxygen (DO) probe is hanging free of obstruction and set away from other internal tank components.	

Step	System ID	Equipment ID	Tasks to Perform	Initial /Notes
			Verify that DO meter has been calibrated and an acceptable low DO alarm initial set point has been established (actual DO concentration in T-300 will be evaluated during startup and actual concentrations will establish the low DO set point and validate the range of the existing DO meter).	
45	T-300	T-300 Man Way	Once configuration and functionality of T-300 internal components is completed, secure man way cover so any vapors that may accumulate in the tank during operation are vented to the atmosphere.	
46	T-300 Discharge	V-134	Verify that T-300 discharge valve is fully open for free flow.	
47	T-300 Discharge	P-300	Verify that the HOA control setting is set to Off (functionality with VFD to maintain set level in T-300 will be established during initial system startup).	
48	T-300 Discharge	V-135	Verify that pressure switch valve is fully open to allow for free flow to pressure switch.	
49	T-300 Discharge	PS-300	Verify that acceptable high-pressure alarm initial set point has been established.	
50	T-300 Discharge	V-137	Verify that globe valve is fully open to allow for free flow (globe valve may need to be partially closed and used for throttling flow from P-300). **Note: During initial system startup, the globe valves will be adjusted to balance flow from T-400 and discharge from T-300. After initial system startup, do not change globe valve setting unless absolutely necessary.**	
51	T-300 Discharge	V-138	Verify that sample tap valve is fully closed.	
52	T-300 Discharge	V-139	Verify that pressure gauge valve is fully open to allow for free flow to pressure gauge.	
53	T-300 Discharge	FIT-700	Verify that an acceptable low-flow alarm initial set point and system response delay have been established.	
54	Discharge Manifold	Ball Valves (9)	Verify ball valves (9) just upstream of the flow meter in each leg of the discharge manifold are open for free flow.	
55	Discharge Manifold	V-710, 711, 712, 713, 714,	For the initial system startup, set **only** the discharge manifold globe valves for the infiltration trenches to ½ open to allow throttled flow to the infiltration trenches. Globe valves will be adjusted and set during initial system startup to balance the discharge flow of injection pump P-300 and the rate at which each infiltration trench is accepting water into the subsurface. **Note: Do not change globe valve position if this procedure is being performed due to an extended system shutdown. In this case, leave the valves in their current positions, which was the last setting used prior to the extended shutdown because these settings are likely still applicable.**	
56	Discharge Manifold	V-715, 716, 718, 719	For the initial system startup, set **only** the discharge manifold globe valves for the injection wells ¼ open to allow throttled flow to the injection wells. Globe valves will be adjusted and set during initial system startup to	

Step	System ID	Equipment ID	Tasks to Perform	Initial /Notes
			balance the discharge flow of injection pump P-300 and the rate at which each injection well is accepting water into the subsurface. **Note: Do not change globe valve position if this procedure is being performed due to an extended system shutdown. In this case, leave the valves in their current positions, which was the last setting used prior to the extended shutdown because these settings are likely still applicable.**	
57	Discharge Manifold	Pressure Gauge Valves (9)	Verify pressure gauge valves (9) in each leg of the discharge manifold are open for free flow to the pressure gauge.	
58	Trench 1 Trench 2 Trench 3 Trench 4 Trench 5	Clean Out Isolation Valves	Verify that valve allowing clean-out flow to the top of the man way is closed and that the valve allowing flow to the infiltration trench is fully open for free flow.	
59	Trench 1 Trench 2 Trench 3 Trench 4 Trench 5	LT-700, LT-701, LT-702, LT-703, LT-704	Verify that level transmitter is hanging free of obstruction and within the man way stilling well. Verify that level transmitter high-high level alarm set point has been established and tested/calibrated with respect to depth to water or max allowable water elevation with respect to the man way bottom using atmospheric pressure transmitter PIT-800 (barometer) reading.	
60	IW-1, IW-2, IW-3, IW-4	Clean Out Isolation Valves	Verify that valve allowing clean-out flow to the top of the man way is closed and that the valve allowing flow to the injection well is fully open for free flow.	
61	IW-1, IW-2, IW-3, IW-4	LT-705, LT-706, LT-707, LT-708	Verify that level transmitter is hanging free of obstruction and within the injection well stilling well. Verify that level transmitter high-high level alarm set point has been established and tested/calibrated with respect to depth to water or max allowable water elevation using atmospheric pressure transmitter PIT-800 (barometer) reading.	
62	Equipment Enclosure	PIT-800	Verify that atmospheric pressure transmitter is functioning properly and is calibrated/tested per manufacturer specifications.	
63	Equipment Enclosure	TIT-800	Verify that temperature transmitter is set up/tested/ calibrated in accordance with manufacturer specifications and is providing accurate temperature readings. Verify that an acceptable low-temperature alarm set point has been established (45 to 50 degrees Fahrenheit) and tested.	
64	Equipment Enclosure	LSHH-800	Verify that level switch is hanging free of obstruction. Verify that level switch has been tested and is functioning normally.	
65	Equipment Enclosure	Oxygen Sensor	Verify oxygen sensor is set up/tested/calibrated in accordance with manufacturer specifications and is providing accurate oxygen readings. Verify that an acceptable high oxygen concentration	

Step	System ID	Equipment ID	Tasks to Perform	Initial /Notes
			set point has been established and tested.	

SOP 3: Initial System Startup

This Standard Operating Procedure (SOP) presents the procedures that will be followed the first time the system is started:

1. Verify that SOP 2: System Pre-Startup, has been completed prior to continuing with this procedure.

2. Prior to initial system startup, verify that all instrumentation has been tested to be functioning properly and that set point activation has been confirmed to be functioning as programmed.

3. Collect initial run time values from P-100, P-110, P-200, and P-300; totalized flow values from FE/FIT-100, FE/FIT-110, FE/FIT-201, FE/FIT-700 and FT-300 through FT-380; and dissolved oxygen reading from AE/AIT-300.

4. Verify that main disconnect switches, exterior disconnect between the three-phase transformer and the electric meter, and disconnect for panel DP-1 are in the ON position and that all individual equipment circuit breakers are set to the connected position.

5. Verify that the C-More displays are showing normally and all information on the display screens is within normal parameters.

   Note: Do not start any equipment from the C-More display screens until directed to do so later in this procedure and after an open pathway for flow is confirmed.

6. Adjust injection well globe (throttling) valves (V-715, 716, 718, and 719) in the discharge manifold so they are ¼ open. After system is running in full auto, injection well throttling valve setting will be fine-tuned so appropriate flow is going to each injection well. Design flow to each injection well is 5 gallons per minute (gpm). Balance will have to be met between optimal system flow rates and the volume of water the injection well in a particular area of the site will accept.

   Note: During initial startup, the system globe valves will be adjusted to balance optimal system flow. For the use of this procedure for a system startup after a prolonged downtime, globe valve setting should not be changed unless absolutely necessary.

7. Adjust infiltration trench globe (throttling) valves (V-710, 711, 712,713, and 714) in the discharge manifold so they are ½ open. After system is running in full auto, infiltration trench throttling valve setting will be fine-tuned so appropriate flow is going to each infiltration trench. Design flow to each infiltration trench is 10 gpm. Balance will have to be met

between optimal system flow rates and the volume of water the infiltration trench in a particular area of the site will accept.

Note: During initial startup, the system globe valves to balance optimal system flow. For the use of this procedure for a system startup after a prolonged downtime, globe valve setting should not be changed unless absolutely necessary.

8. Set injection pump P-300 control setting to AUTO. If water is in tank T-300 above the low-low level set point the pump will run; if the tank is dry or below the low-low level set point the pump will not operate. As programmed, the variable frequency drive (VFD) in conjunction with the level controller of T-300 will control the speed of P-300 to maintain a specified level set point in T-300. Therefore, when T-300 first starts to fill (if not already full of water), the speed of P-300 will be slow, and as the tank fills, the speed of P-300 will increase to match the volume of water entering T-300 until equilibrium is achieved at the desired level set point.

9. Set motorized valve XCV-200 control setting to AUTO. Valve should be in the closed position and not open until P-200 is called to run. Programming includes a time delay between the opening of XCV-200 and the operation of P-200 (XCV-200 opens then P-200 starts).

10. Set solenoid valve SV-900 control setting to AUTO. Valve should be in the closed position and not open until P-200 is called to run.

11. Set air compressor T-500 control setting to ON. Air compressor should start and accumulate pressure and shut off automatically when maximum capacity is reached.

12. Set oxygen generator T-800 control setting to AUTO. Oxygen generator should start and pressure should accumulate in the oxygen receiving tank T-900. Oxygen generator should shut down automatically when maximum capacity is reached.

13. Set pressure in the oxygen supply line from T-900 to SV-900 to 25 pounds per square inch using pressure regulator V-126. Once P-200 is called to operate, SV-900 will open allowing oxygen flow to the Venturi injector. At this time, the oxygen flow will be adjusted using V-126 as described in Step 18.

14. Set transfer pump P-200 control setting to AUTO. If water is in tank T-200 above the low-low level set point the pump will run; if the tank is dry or below the low-low level set point the pump will not operate. As programmed, the VFD in conjunction with the level controller of T-200 will control the speed of P-200 to maintain a specified level set point in T-200. Therefore, when T-200 first starts to fill (if not already full of water), the speed of P-200 will

be slow, and as the tank fills the speed of P-200 will increase to match the volume of water entering T-200 until equilibrium is achieved at the desired level set point.

15. Set extraction well pump P-100 control setting to AUTO (start). The pump should turn on and start pumping groundwater to T-200. Verify that the pump is operating normally with respect to level control.

    Note: system downstream components, previously set in auto, shall be monitored and confirmation shall be made that the components are functioning as programmed.

16. Using globe (throttling) valve V-108, adjust the flow from P-100 until approximately 35 gpm is registering at flow meter FE/FIT-100.

17. Verify that no leaks are present in the system piping and components.

18. Adjust oxygen flow to the Venturi injector to 0.6 cubic foot per minute (cfm) or 35 cubic feet per hour (cfh) using pressure regulator V-126 and monitoring flow meter FM-200. The system design criteria calls for a 1:1 ratio between gpm and cfh.

19. Using the flow totalizer in each leg of the discharge manifold, determine the approximate volume of oxygenated groundwater being discharged to each injection well and infiltration trench with the pre-startup globe (throttling) valve settings (½ open for infiltration trenches and ¼ open for injection wells). With one extraction well in operation producing groundwater at 35 gpm, each injection well should be receiving approximately 2.5 gpm and each infiltration trench should be receiving approximately 5 gpm. Use the globe (throttling) valve in each leg of the discharge manifold to adjust flow as needed. High-level alarms in each discharge location will indicate any excessive mounding.

20. Allow the system to operate for approximately 1 hour with one extraction well pump in operation and continue to monitor system performance.

21. Set extraction well pump P-110 control setting to AUTO (start). The pump should turn on and start pumping groundwater to T-200. Verify that the pump is operating normally with respect to level control.

    Note: system downstream components, previously set in auto, shall be monitored, and confirmation shall be made that the components are functioning as programmed.

22. Using globe (throttling) valve V-101, adjust the flow from P-110 until approximately 35 gpm is registering at flow meter FE/FIT-110.

23. Verify that no leaks are present in the system piping and components.

24. Adjust oxygen flow to the Venturi injector to 1.2 cfm or 70 cfh using pressure regulator V-126 and monitoring flow meter FM-200. The system design criteria calls for a 1:1 ratio between gpm and cfh.

25. Using the flow totalizer in each leg of the discharge manifold, determine the approximate volume of oxygenated groundwater being discharged to each injection well and infiltration trench. With both extraction wells in operation producing groundwater at 70 gpm, each injection well should be receiving approximately 5 gpm and each infiltration trench should be receiving approximately 10 gpm. Use the globe (throttling) valve in each leg of the discharge manifold to adjust flow as needed. High-level alarms in each discharge location will indicate any excessive mounding and if the subsurface of certain areas are more conducive to accepting larger volumes of oxygenated groundwater than others.

26. The process of fine-tuning the volume that will be delivered to each discharge location will involve a series of adjustments and if needed the flow from the extraction wells can be throttled down to some extent; however, the goal of the system is to deliver as much oxygenated groundwater to the source areas as possible.

27. Allow the system to operate for approximately 1 hour with both extraction well pumps in operation and continue to monitor system performance.

SOP 4: Routine System Startup

This Standard Operating Procedure (SOP) presents the procedures for routine system startup (routine startups after temporary system shutdowns). Routine system startup procedures assume that pre-startup and initial system startup requirements have been completed or are still in place.

1. Collect initial run time values from P-100, P-110, P-200, and P-300; totalized flow values from FE/FIT-100, FE/FIT-110, FE/FIT-201, FE/FIT-700, and FT-300 through FT-380; and dissolved oxygen reading from AE/AIT-300.

2. Verify that main disconnect switches, exterior disconnect between the three-phase transformer and the electric meter, and disconnect for panel DP-1 are in the ON position and that all individual equipment circuit breakers are set to the connected position.

3. Verify that the C-More displays are showing normally and all information on the display screens is within normal parameters.

4. Confirm injection pump P-300 control setting is set to AUTO.

5. Confirm motorized valve XCV-200 control setting is set to AUTO.

6. Confirm solenoid valve SV-900 control setting is set to AUTO.

7. Confirm air compressor T-500 control setting is set to ON.

8. Confirm oxygen generator T-800 control setting is set to AUTO.

9. Confirm transfer pump P-200 control setting is set to AUTO.

10. Set extraction well pump P-100 control setting to AUTO (start). The pump should turn on and start pumping groundwater to T-200. Verify that the pump is operating normally with respect to level control. Set extraction well pump P-110 control setting to AUTO (start). The pump should turn on and start pumping groundwater to T-200. Verify that the pump is operating normally with respect to level control.

    Note: system downstream components, previously set in auto, shall be monitored and confirmation shall be made that the components are functioning as programmed.

11. Confirm normal flow from P-100 at flow meter FE/FIT-100. Use globe (throttling) valve V-108 to adjust flow (if needed). Confirm normal flow from P-110 at flow meter FE/FIT-110. Use globe (throttling) valve V-101 to adjust flow (if needed).

12. Verify that no leaks are present in the system piping and components.

13. Confirm normal oxygen flow to the Venturi injector at flow meter FM-200. The system design criteria calls for a 1:1 ratio between gpm and cfh.

14. Allow the system to operate for approximately 1 hour and monitor system performance.

SOP 5: System Shutdown

Note: At any time, the system can be completely shut down by pressing an emergency shutdown/kill switch.

This Standard Operating Procedure (SOP) presents the procedures for normal/routine shutdown of the system:

1. Set extraction well pump P-100 control setting to OFF (stop). The pump should shut down and stop pumping groundwater to T-200. Set extraction well pump P-110 control setting to OFF (stop). The pump should shut down and stop pumping groundwater to T-200.

2. Confirm transfer pump P-200 ramps down and completely shuts down upon reaching the low-level set point in T-200.

3. After pump P-200 shutdown, confirm solenoid valve SV-900 closes, stopping the flow of oxygen to the Venturi injector, and motorized valve XCV-200 closes to prevent any potential backflow from solids settling tank T-400.

4. Confirm injection pump P-300 ramps down and completely shuts down upon reaching the low-level set point in T-300.

5. Confirm air compressor T-500 automatic shutdown upon reaching maximum pressure storage capacity.

6. Confirm oxygen generator T-800 automatic shutdown upon reaching maximum pressure storage capacity.

EXECUTIVE SUMMARY

This Health and Safety Standard (HSS) sets forth minimum requirements for ARCADIS personnel to conduct work that involves stored energy sources, and to prevent employees from injuries by controlling the associated hazardous energy and unexpected start-up of equipment by means of Lockout/Tagout procedures.

This Standard applies:

- To hazardous energy including but not limited to kinetic, electrical, chemical, thermal, hydraulic, gravitational, and pneumatic.
- When servicing or performing maintenance on equipment
- When required to remove or bypass a guard or other safety device,
- When required to place any part of their body in an area where a danger zone exists during a machine or equipment operating cycle.

Through this standard, ARCADIS requires:

- Development of a LOTO plan prior to initiating the energy isolation process
- Use of a lockout device and an attached tag on all isolating devices capable of being locked out or accepting lockout devices.
- At a minimum, the use of a tagout system designed to provide full employee protection against equipment start-up, if an energy isolating device is not capable of being locked out.
- Only authorized and qualified personnel to initiate Lockout/tagout isolation procedures.
- Notification of all affected personnel prior to equipment deactivation and isolation, and also prior to equipment reactivation after isolation measures have been removed.
- Those authorized to perform energy isolation to have their own locking device
- Awareness level training of all affected employees who work in areas or with equipment where Lockout/Tagout will be performed, in order to recognize the hazards of energized and locked or tagged out equipment, and to understand the basic requirements of Lockout/Tagout.

1. POLICY

It is ARCADIS policy to be proactive in the identification, assessment and control of health and safety hazards and associated risks. To those means, any equipment that utilizes or stores hazardous energy will be controlled following this standard at any time ARCADIS staff or its subcontractors must perform maintenance on this equipment. Whenever possible, ARCADIS will de-energize equipment before performing maintenance, troubleshooting, or other activities where hazardous energy is present. When controlling hazardous energy, this standard, at a minimum will be strictly followed.

ARCADIS will provide, as necessary to execute project work, necessary equipment to unexpected energization of equipment. This equipment includes but is not limited to locks, tags, chains, wedges, key blocks, plug lockouts, adapter pins, self locking fasteners or other hardware for isolating, securing or blocking of machines or equipment to prevent incidents involving hazardous energy.

2. PURPOSE AND SCOPE

2.1 Purpose

This Health & Safety standard (HSS) details the administration and necessary provisions for protecting employees from injuries associated with hazardous energy release, and unexpected start-up of equipment.

2.2 Scope

This standard applies to all employees of ARCADIS US. and on all projects where equipment that utilizes hazardous energy is present and maintained by ARCADIS staff. ARCADIS US subcontractors must have LOTO programs that meet the minimum requirements of this standard.

Only trained and authorized personnel are permitted to utilize procedures outlined here for locking or tagging out equipment to ensure it does not unexpectedly energize and/or start while a person is performing maintenance or service activities. The standard applies specifically to employees that operate, service or maintain equipment requiring the removal or by-passing of a machine guard or protective enclosure. In addition, it applies to personnel who must place any part of their body in a place where the accidental energization of equipment, release of stored energy, or release of stored hazardous materials may cause injury.

ARCADIS US staff who design and develop equipment and processes that require energization, must do so to allow for LOTO and include information as to how to LOTO such equipment or processes.

If any device must be worked on in an electrically energized capacity, the work will be done following the ARCADIS Electrical Safety Standard (ARC HSFS006). If other energized equipment must be worked on in an energized state, contact Corporate H&S or the client H&S resource for guidance.

3. DEFINITIONS

Affected Employee operates or uses equipment that is subject to lockout/tagout procedures or works around or in the vicinity of equipment subject to lockout/tagout processes.

Authorized Employee performs lockout/tagout procedures.

Energy Isolation Device is a mechanical device that physically prevents the transmission or release of energy. It does not include control circuit type devices, but rather physical devices that control circuit operation designed to accept a lockout device. They are installed when replacement or major repair, renovation, or modification of a machine or equipment is performed, and when new machines or equipment are installed.

Hazardous Energy covered by this standard includes, but is not limited to:

- Electrical
- Mechanical
- Hydraulic
- Pneumatic
- Chemical
- Thermal
- Gravitational (stored)
- Pressure (stored)
- Hazardous materials

Lockout Device is a device that utilizes a positive means, such as a lock, chain, block, etc. to hold an energy-isolating device in a safe position ensuring that the energy isolating device and equipment cannot be operated.

Tagout Device is a prominent warning device, such as a tag, to indicate that the isolating energy device and equipment may not be operated.

4. RESPONSIBILITIES

4.1 Corporate H&S with Division and Practice Experts

On an annual basis, review and update, as necessary, this standard. In addition, review LOTO standards in the field periodically to ensure conformance to this standard. Provide the initial LOTO training and retraining, or recommend qualified training provider, to staff based on needs. Provide technical assistance regarding LOTO processes. Assess project-specific LOTO programs for compliance with this HSP.

4.2 Principal in Charge (PIC), Project Manager (PM), and Task Manager (TM)

Are responsible to:

- Verify that all LOTO protocols are properly identified and addressed within the project work plan, project health & safety plan, and/or other project-related documents.
- Verify that their project team employees have received the proper LOTO training provided by Corporate Health & Safety or qualified training source prior to conducting LOTO activities.
- Verify that the proper LOTO equipment, including PPE, electrical testing equipment and safety equipment, is available for use by their project employees.

4.3 Health and Safety Plan Writers and Reviewers

Utilize this standard as guidance to ensure the appropriate identification, assessment and control of equipment with hazardous energy for documentation in project HASPs

4.4 Authorized Employee

Authorized employees must have training and instruction in their duties and responsibilities regarding LOTO.

- Recognize the hazards which may be faced during LOTO activities
- Develop an equipment specific LOTO procedure for the specific LOTO work to be done
- Follow the requirements of this Standard, the project HASP, JLAs and any other specific LOTO procedures applicable to the work being done
- Use the appropriate and applicable PPE and testing equipment that has been provided.

4.5 Affected Employees

- Understand the hazards of energized and de-energized equipment
- Follow the instructions provided by supervisors and authorized employees who are conducting LOTO work
- Do not tamper with or remove LOTO devices.

4.6 All ARCADIS Employees

Use the TRACK process regularly and frequently. In addition, read and understand all hazard identification and risk assessments conducted using the HARC process as

documented in HASPs, JLAs, and other written plans that are associated with their work. ARCADIS employees will:

- Participate in entry operations only if trained and authorized to do so
- Never tamper with equipment that is under LOTO control
- Never attempt to work on energized or de-energized equipment without appropriate training and authorization

5. PROCEDURE

LOTO procedures are used to control energy hazards associated with service and maintenance of equipment which utilizes hazardous energy to operate. This Standard applies to all types of energy including kinetic, potential, electrical, chemical, thermal, hydraulic, gravitational, and pneumatic. The Standard applies when servicing or performing maintenance on equipment and during normal production operations if personnel are:

- Required to remove or bypass a guard or other safety device, or
- Required to place any part of their body in an area where a danger zone exists during a machine or equipment operating cycle.

5.1 General Requirements

An Energy Control Program is developed to ensure that before service or maintenance of equipment is performed, the equipment is isolated from its energy source and made inoperable so that unexpected energizing, startup or release of stored energy during equipment service and maintenance is prevented. This program can be developed as part of the project HASP, a JLA, or specific LOTO procedure to include the requirements of this Standard and our clients.

5.2 Equipment List

- Hardware

ARCADIS will provide, as necessary to execute project work, locks, tags, chains, wedges, key blocks, plug lockouts, adapter pins, self locking fasteners or other hardware for isolating, securing or blocking of machines or equipment to control energy sources.

- Lockout/Tagout Devices

Lockout devices and tags are color coded and issued by ARCADIS, and are the only device(s) used for controlling energy. LOTO Locks and tags must not be used for other purposes. All locks and tags provided by ARCADIS are capable of withstanding the environment to which they are exposed for the maximum period of time that exposure is expected. Locks and tags are of substantial construction in order to prevent inadvertent or accidental removal. All tags are required to be marked to identify the employee applying the lock(s)/tag(s).

- Lockout/Tagout Tags

Only standard "Danger – Do Not Operate" (black, red and white) tags will be used. Tags are constructed so that exposure to weather conditions or wet and damp locations will not cause the tag to deteriorate or the message on the tag to become illegible. Tags will warn against hazardous conditions if the machine or equipment is energized, and will include a legend such as the following: "Do Not Start," "Do Not Open," "Do Not Close," "Do Not Energize," or "Do Not Operate," depending on application. Used tags are to be destroyed and the tags will not be re-used unless designated for re-use.

- Energy Isolating Devices

When replacement or major repair, renovation, or modification of a machine or equipment is performed, and when new machines or equipment are installed, energy-isolating devices designed to accept a lockout device for such machines or equipment will be installed. If equipment for de-energizing is in a confined space, the confined space will be cleared of all employees prior to testing the energy source for de-activation.

5.3 Safety Procedures for Lockout/Tagout and Isolation

ARCADIS requires the use of a lockout device and an attached tag on all isolating devices capable of being locked out or accepting lockout devices. If an energy isolating device is not capable of being locked out, ARCADIS requires the use of a tagout system designed to provide full employee protection against equipment start-up. When a tagout device is used on an energy-isolating device, the tag shall be attached at the same location that the lockout device would have been attached. Additional precautions will be implemented to provide a level of safety equivalent to that obtained by using a lockout device. Additional safety measures may include such steps as the removal of an isolating circuit element, blocking of a controlling switch, opening of an extra disconnecting device, or removal of a valve handle to reduce the likelihood of inadvertent energization.

Lockout/tagout isolation procedures will be initiated only by authorized personnel. Personnel not trained in lockout/tagout procedures are not authorized to install, inspect, repair, adjust, remove, maintain or service equipment where the potential for injury due to accidental start-up, energization, or release of stored energy exists.

All affected personnel must be notified prior to equipment deactivation and isolation and must be notified prior to equipment reactivation after isolation measures have been removed. Personnel involved with lockout/tagout isolation of equipment shall receive information concerning the specific type and magnitude of energy or hazardous material involved, the hazards involved, and the method of control to be utilized.

Authorized personnel shall de-energize equipment by following a procedure developed specifically for the equipment involved and consistent with this Standard and OSHA 29 CFR 1910.147 or other applicable laws and client requirements.

Prior to performing any work on equipment, all isolation devices shall be in place. Locks and tags shall be affixed to each energy-isolating device by authorized personnel. These must secure the isolated equipment in the "off" position. Each person involved with

servicing the isolated equipment shall attach a lock to the isolating device. In situations involving two or more persons, multiple lock hasps shall be utilized. **Tags shall be attached with all locks and must identify the authorized individual responsible for each lock, must be signed, dated and must have the name of the contractor with which the employee is employed.**

All potentially stored or residual energy must be released, relieved or disconnected. If there is a potential of accumulation, verification of isolation shall be conducted and documented throughout the project (see the next section).

Prior to work, authorized personnel shall verify and document that the equipment has been disengaged, de-energized, and isolated. Release of lockout/tagout isolation includes (see Template for Equipment Specific LOTO Procedure in Exhibit 1) :

- The work area and equipment shall be inspected to ensure that non-essential items (i.e., tools) are not left in the work area and that the equipment is intact
- The work area shall be checked to ensure that all personnel are clear. Before lockout/tagout devices are removed, affected personnel shall be notified
- Removal of lockout/tagout devices shall be performed by the authorized personnel who attached the devices

If a machine must be re-energized after initial isolation (i.e., for testing or repositioning), then lockout/tagout procedures must be followed as outlined to re-isolate the equipment.

During shift or personnel changes, transfer of control will occur between authorized personnel only. If an authorized person must leave the site, then he/she must remove his/her locks and tags. The new authorized person will then immediately place his/her locks and tags on the equipment and complete the entire lockout/tagout procedure as outlined above.

Use of tagout procedures without the use of locks can only be utilized if the equipment to be de-energized will not accept a lock and the following conditions are met:

- Tagout procedures will provide protection to personnel equivalent to the use of locks
- Additional measures, sufficient to ensure protection of employees, are taken to prevent accidental start-up or energization
- If equipment for de-energizing is in a confined space, the confined space will be cleared of all employees prior to testing the energy source for deactivation

5.4 General Lockout Tagout

Specific LOTO procedures will be developed for each piece of energized equipment requiring maintenance or service. These specific procedures can be developed on the form found in Exhibit 1 of this Standard. If a client has specific written lockout/tagout

procedures for its facility equipment with which employees of ARCADIS are working, the procedure will be reviewed and utilized or revised by ARCADIS, as appropriate.

The following information provides general LOTO procedures to be used for the development of equipment specific procedures.

5.4.1 Lockout/Tagout Sequence

- The authorized employee(s) shall notify all affected employees prior to the shutdown and isolation of the equipment/machine. Affected employees should be informed of the reason for shutdown and approximate length of time required for servicing or maintenance.
- The authorized employee(s) shall review the type(s) and magnitude(s) of energy present and the hazards present.
- If the machine/equipment is operating, the authorized employee(s) shall have the machine/ equipment operator explain the standard shutdown procedure and then shut it down according to the procedure.
- The energy isolating devices shall be deactivated so the machine/equipment is isolated from the energy source(s).
- Each isolating device shall be locked out and tagged out. If lockout is not feasible, only tagout of the isolating device will be conducted, and additional precautions will be required to provide employee protection equivalent to the protection provided when lockout procedures are utilized. Each authorized person conducting activities on the equipment/machine shall attach a(n) [individually assigned] safety lock to each isolating device. A standard tag shall also be attached to each individual's lock that identifies, by name, the authorized employee responsible for each lock. Stored or residual energy must be released or dissipated from each system to reach a zero energy state. Visual inspection shall be made to confirm that all moving parts have stopped. Any stored or residual energy shall be drained, blocked, repositioned, restrained, or bled. Electrical circuits shall be grounded to discharge electricity stored in capacitors.
- To ensure that the equipment is completely isolated from the energy source(s), it is necessary to test the equipment to make certain that it will not operate. The following methods shall be used to test the equipment.
- Check the area and equipment to assure that no personnel are exposed to the start-up of equipment
- Activate all start-up devices and operating controls
- Use tic-tracers or voltage indicators to test electrical circuits
- Return all operating control(s) to the neutral or off position after verifying the isolation of the equipment

5.4.2 Release of Lockout/Tagout and Return of Equipment to Service

When the equipment/machine is ready to be returned to service at the conclusion of work activities, the following steps shall be taken to safely return equipment to service:

- Check the machine/equipment and immediate area to ensure that non-essential items and tools have been removed
- Check to ensure that all guards and covers have been replaced
- Check to ensure that all employees are safely positioned or have left the area
- Check to ensure that all operating controls are in the neutral or off position
- All authorized employees shall personally remove their individual locks and tags from the isolation devices and destroy used danger tags unless tags are designed for reuse
- All affected employees must be notified that the work activities are completed and the equipment/machine is ready for use

If work activities are not completed prior to a shift ending (or other personnel change), then the procedures in “Transfer of Lockout/Tagout During Shift and Personnel Changes” (below) must be followed.

5.4.3 Transfer of Lockout/Tagout During Shift and Personnel Changes

The supervisor shall designate an authorized employee who shall control the lockout/tagout devices at the end of a shift and shall be responsible for transferring lockout/tagout authority to the next shift.

The designated authorized employee shall not remove his/her lock from any of the isolation devices until at least one of the arriving authorized employees has locked out and tagged out all of the isolation devices.

If the arriving authorized employees assuming responsibility for lockout/tagout do not attach locks prior to the previous shift employees removing all of their locks, then the employees assuming lockout/tagout authority shall repeat the entire lockout/tagout sequence.

5.5 Group Lockout/Tagout

Authorized employees shall obtain specific site lockout instructions from the project manager or designee and coordinate extended lockout requirements with the project manager or designee. When more than two employees are involved in work activities on the machine or equipment covered by this Standard, each authorized employee will attach a lock to a multi-lock hasp on each isolation device.

When group lockout/tagout is utilized, the last authorized employee with a lock attached to isolation devices will be responsible for removing the isolation devices and restoring equipment to use conditions according to the equipment-specific or general HSP.

When more than one crew, trade, or contractor, etc, is used on a project that requires equipment lockout/tagout, one specific employee shall be designated to coordinate affected work forces and to ensure continuity of protection.

5.6 Employee Unavailable to Unlock

If the employee who installed a locking device is not available, the following procedure shall be used to unlock the device(s).

- The individual requesting device removal will attempt to contact the authorized employee via cell phone, hotel phone or home phone and request the employee return to remove the device. If the authorized employee is contacted but can not come in, the status of the locked equipment will be documented and the requesting entity notified of the equipment status. All of the above to include unanswered attempts at contact will be documented. If contact is not made, a message will be left to indicate that the locking device will be removed. Upon removal a red warning tag will be left where the device was placed indicating to the authorized employee that the device was removed and the equipment is now energized.

- The Project Manager or designee will verify that the authorized employee is not at the facility and is not potentially in harms way relative to the affected equipment.

- The Project Manager or designee will notify the corporate Health and Safety or the client H&S resource of the reason for device removal and the status of the affected employee.

- The device shall be removed after verifying that no employees are in harms way.

- The entire sequence of events will be documented in the form of a memorandum addressed to the Division Director of H&S.

5.7 Additional Precautions

- All energy sources must be isolated and locked out. Be aware that there can be more than one energy source.

- Additional safety precautions must be taken in situations where only a tag can be used.

- Stored energy must be released or isolated after applying lockout/tagout devices.

- Make sure that all tools and equipment are removed from the work area prior to removing lockout/tagout devices and restoring energy.

6. TRAINING

All affected employees who work in areas or with equipment where or on which LOTO will be performed will be trained in awareness level training as provided by ARCADIS in order to recognize the hazards of energized and locked or tagged out equipment and to understand the basic requirements of LOTO. Training provided to Authorized Employees will be provided with hands-on, classroom type training or equivalent as approved by the Corporate H&S Training Department.

Retraining is required when there is a change in job assignments, machines, or the energy control procedures, or a new hazard is introduced.

Documentation of training certification received by attendance at any training course including externally provided training courses will be kept by the employee with copies provided to the Training Department.

7. REFERENCES

- ARCADIS Health and Safety Standard ARC HSFS010– Health and Safety Planning
- ARCADIS Health and Safety Standard ARC HSFS003 – Confined Space Entry
- ARCADIS Health and Safety Standard ARC HSFS006 – Electrical Safety
- OSHA 29 CFR 1910.147, The Control of Hazardous Energy

8. RECORDS

- Training records will be kept by the individual employee with copies of such certificates kept by the ARCADIS Training Team.
- Specific LOTO procedures and JLAs will be kept with project files or in the 4 Sight database.
- Copies of all HASPs that document LOTO procedures will be kept in the project files.
- Lockout/Tagout Inspection Checklists will be kept in the project files.

9. APPROVALS AND HISTORY OF CHANGE

Approved By:

History of Change

Revision Date	Revision Number	Reason for Change
1 October 2008	01	Original document
26 February 2009	02	Corrected title and document number in the Exhibit
6 October 2010	03	Addition to section 6.0
28 February 2011	04	Reviewed and Updated to new Standards Format. Added Executive Summary Section.

Exhibit 1 – Template for Equipment Specific LOTO Procedure

LOCKOUT/TAGOUT PROCEDURE

ARCADIS Office: _____

Written By (Name/Job Title): _____ Date Written:_____

Revised By (Name/Job Title): _____ Date Revised:_____

INTRODUCTION

This procedure is specific to machines/equipment with an energy source and covers the safety rules and procedures to follow while installing, servicing or performing maintenance on any equipment or machines in which unexpected energization or start up, or release of stored energy could cause injury to employees. This procedure includes the following machine(s)/equipment(s):

- **[machine/equipment name or description]**
- **[machine/equipment name or description]**
- **[machine/equipment name or description]**

The circuits that energize the equipment or machines will be locked with a personally assigned lock and a disposable tag per the ARCADIS Control of Hazardous Energy (Lockout/Tagout) Standard-ARC HSFS004.

PURPOSE

This procedure establishes the minimum requirements for the lockout of energy isolating devices whenever maintenance or servicing is performed on machines or equipment. It shall insure that the machine or equipment is stopped, isolated from all potentially hazardous energy sources and locked out before any servicing or maintenance where the unexpected energization or start-up of the machine or equipment or releases of stored energy could cause injury.

COMPLIANCE

All employees are required to comply with the limitations and restrictions imposed on them during the use of this lockout/tagout procedure. The authorized employees are required to perform the lockout/tagout in accordance with this standard. All employees, upon observing a machine or piece of equipment which is locked/tagged out to perform servicing or maintenance shall not attempt to use that machine or equipment. This standard is written in accordance with the Occupational Safety and Health Administration (OSHA) Standard 1910.147.

Any person who willfully violates this standard is subject to disciplinary action including termination.

SEQUENCE OF LOCKOUT/TAGOUT

Prior to removing a **machine/equipment** from service for servicing or maintenance the following steps shall be taken.

1. Notify all affected employees that servicing or maintenance is required on a machine or piece of equipment and that the machine or equipment must be shut down and locked/tagged out to perform the servicing or maintenance.

2. The authorized employees (e.g._____) shall refer to the manufacturer's manual to identify the type and magnitude of the energy source that the machine or equipment utilizes, shall understand the hazards of the energy source, and shall know how to control the energy.

3. If the machine or equipment is operating, shut it down through the normal procedures as specified in the manufacturer's manual.

4. Deactivate the electrical energy isolating device so that the machine or equipment is isolated from the energy source. Most equipment and machines that require this procedure have a separate circuit box that can be locked/tagged out for that specific piece of equipment or machine.

5. Lock/tag out the energy isolating device with an assigned individual lock and disposable red tag. The (e.g._____) will place the first lock followed by the mechanical assembly supervisor or designee.

6. Any stored or residual electrical energy must be dissipated or restrained by the (e.g._____) first and then the (e.g._____).

7. Ensure that the equipment is disconnected from its energy source. Make sure no personnel are or will be exposed; then verify the isolation of the equipment by attempting to operate through the normal controls. CAUTION: The operating controls must be returned to the neutral or "off' position after verification of isolation.

8. The machine/equipment is now locked/tagged out and servicing or maintenance can proceed.

RESTORING EQUIPMENT TO SERVICE

1. After servicing or maintenance is completed and the **machine/equipment** is ready to be returned to normal operation, the following steps shall be taken.

2. Check the **machine/equipment** and the area immediately around the **machine/equipment** to ensure that non-essential items have been removed and the **machine/equipment** and/or components are operationally intact.

3. Check the area to ensure that all non-essential personnel are in a safe place or are well clear of the area.

4. Verify that all operating controls are in the "off" position or are in neutral.

5. Remove the lock/tag out devices. The (e.g._____) will remove his lock first followed by the (e.g._____).

6. Notify affected employees that the servicing or maintenance has been completed and that the **machine/equipment** is ready for use.

7. Re-energize the **machine/equipment.**

ARCADIS
Infrastructure, environment, facilities

Lockout / Tagout Equipment-Specific Energy Control Procedure

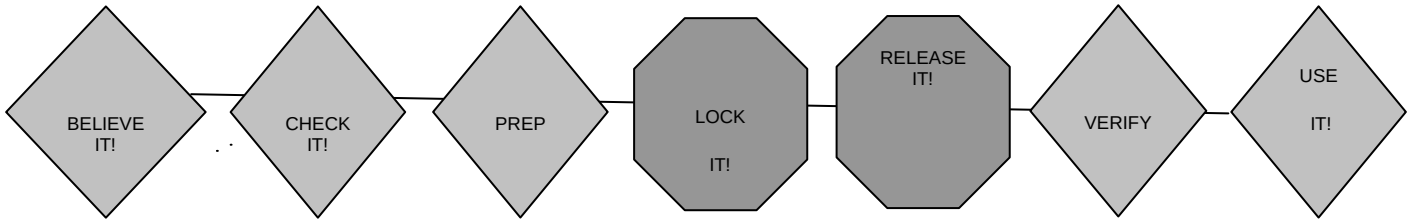

Equipment Identification:

_____

_____

Hazardous Energy Source		Isolation Device			Verifying Lockout
Type and Magnitude	**Function**	**Type**	**Location**	**I.D. No.**	**Means of Verification of Lockout**
Electrical (i.e., 120, 220, 480)					
Pneumatic					
Hydraulic					
Mechanical					
Potential Energy					

(springs, tension, etc.)					
Gravity					
Chemical					
Other					
Other					
Area:		**Date of Last Review:**			**Authorized by:**

SOP 7: Alarm Testing

This Standard Operating Procedure (SOP) presents the procedures for testing the system alarms. System alarms will be tested annually. The Annual Alarm Testing Log is provided in Appendix E of the Operation, Maintenance, and Monitoring Manual. Prior to adjusting or modifying system set points at the PLC or the instrumentation, record the normal operating set points so that once the testing is complete the normal set points can be restored.

LALL-100 and LALL-110, low-low level in EW-1 and EW-2, respectively:

Test the low-low level alarms for the system extraction wells by adjusting the low-low level set point at the PLC to a depth above the existing water level in the well. This should prompt the extraction well pump to shut down and an alarm should be indicated by the PLC. Once proper functionality is confirmed, restore the normal operating low-low level set point for the extraction well level transmitter; the pump should return to normal operation.

FAL-100 and FAL-110, low flow from EW-1 and EW-2, respectively:

Test the low-flow alarms for the system extraction wells by adjusting the low-flow set point at the PLC to a flow 5 to 10 gallons per minute (gpm) above the normal/current flow coming from each extraction well. After a 20- to 30-second delay, this should prompt the extraction well pump to shut down and an alarm should be indicated by the PLC. Once proper functionality is confirmed, restore the normal operating low-flow set point for the extraction well flow meter; the pump should return to normal operation.

LALL-200, low-low level in Tank T-200:

Low-low level alarm testing for the system equalization tank includes a test of both the level transmitter set point and the mechanical level float switch. Test the level transmitter low-low level alarm by adjusting the low-low level set point at the PLC to a depth above the existing water level in the tank. This should prompt transfer pump P-200 to shut down, solenoid valve SV-900 to close, motorized valve XCV-200 to close, and an alarm should be indicated by the PLC. Once proper functionality is confirmed, restore the normal operating low-low level set point for the equalization tank level transmitter; the system should return to normal operation.

Test the mechanical level float switch low-low level alarm by pulling the float out of the water and allowing it to hang straight downward. This should prompt transfer pump P-200 to shut down, solenoid valve SV-900 to close, motorized valve XCV-200 to close, and an alarm should be indicated by the PLC. Once proper functionality is confirmed, return the mechanical level float switch to its normal position within the equalization tank; the system should return to normal operation.

LAHH-200, high-high Level in Tank T-200:

High-high level alarm testing for the system equalization tank includes a test of both the level transmitter set point and the mechanical level float switch. Test the level transmitter high-high level alarm by adjusting the high-high level set point at the PLC to a depth below the existing water level in the tank. This should prompt both extraction well pumps to shut down and an alarm should be indicated by the PLC. Once proper functionality is confirmed, restore the normal operating high-high level set point for the equalization tank level transmitter; the system should return to normal operation.

Test the mechanical level float switch high-high level alarm by physically tipping the float from its normal vertical position to upside down. This should prompt both extraction well pumps to shut down and an alarm should be indicated by the PLC. Once proper functionality is confirmed, return the mechanical level float switch to its normal position within the equalization tank; the system should return to normal operation.

PAH-200, high pressure in the discharge piping of transfer pump P-200:

Test high-pressure alarms for the system by adjusting the high-pressure set point at the pressure transmitter to a pressure 5 to 10 pounds per square inch (psi) below normal operating pressure of the piping in which it is installed. This should prompt transfer pump P-200 and both extraction well pumps to shut down, solenoid valve SV-900 to close, motorized valve XCV-200 to close, and an alarm should be indicated by the PLC. Once proper functionality is confirmed, restore the normal operating high-pressure set point for the pressure transmitter; the system should return to normal operation.

FAL-201, low flow from transfer pump P-200:

Test the low-flow alarm for the system transfer pump by adjusting the low-flow set point at the PLC to a flow 5 to 10 gpm above the normal/current flow coming from the transfer pump. After a 20- to 30-second delay, this should prompt transfer pump P-200 and both extraction well pumps to shut down, solenoid valve SV-900 to close, motorized valve XCV-200 to close, and an alarm should be indicated by the PLC. Once proper functionality is confirmed, restore the normal operating low-flow set point for the transfer pump flow meter; the system should return to normal operation.

YA-P-200, auxiliary contact failure/variable frequency drive (VFD) fault for transfer pump P-200:

Test auxiliary contact failure/VFD fault for transfer pump P-200 by pulling the fuse in the panel that provides the signal to the PLC that the pump is being called to run and is running. With the fuse out of the panel, the operation of both extraction well pumps should be disabled, solenoid valve SV-900 should remain closed, motorized valve XCV-200 should remain closed,

and an alarm should be indicated by the PLC. Once proper functionality is confirmed, replace the fuse and restart the system; the system should return to normal operation.

PAL-900, low pressure within oxygen receiving tank T-900:

Test low-pressure alarms for the system by adjusting the low-pressure set point at the pressure transmitter to a pressure 5 to 10 psi above normal/current operating pressure of tank T-900. This should prompt transfer pump P-200 and both extraction well pumps to shut down, solenoid valve SV-900 to close, motorized valve XCV-200 to close, and an alarm should be indicated by the PLC. Once proper functionality is confirmed, restore the normal operating low-pressure set point for the pressure switch; the system should return to normal operation.

ZA-200, discord/auxiliary contact failure alarm for solids settling tank influent motorized valve XCV-200:

Test discord/auxiliary contact failure for solids settling tank influent motorized valve XCV-200 by pulling the fuse in the panel that provides the signal to the PLC that the valve is being called to open or close and is operating normally. With the fuse out of the panel, the operation of transfer pump P-200 and both extraction well pumps should be disabled, solenoid valve SV-900 should remain closed, motorized valve XCV-200 should remain closed, and an alarm should be indicated by the PLC. Once proper functionality is confirmed, replace the fuse and restart the system; the system should return to normal operation.

LAHH-400, high-high level in solids settling tank T-400:

Test the mechanical level float switch high-high level alarm by physically tipping the float from its normal vertical position to upside down. This should prompt transfer pump P-200 and both extraction well pumps to shut down, solenoid valve SV-900 to close, motorized valve XCV-200 to close, and an alarm should be indicated by the PLC. Once proper functionality is confirmed, return the mechanical level float switch to its normal position within the solids settling tank; the system should return to normal operation.

LALL-300, low-low level in tank T-300:

Low-low level alarm testing for the system decant tank includes a test of both the level transmitter set point and the mechanical level float switch. Test the level transmitter low-low level alarm by adjusting the low-low level set point at the PLC to a depth above the existing water level in the tank. This should prompt injection pump P-300 to shut down and an alarm should be indicated by the PLC. Once proper functionality is confirmed, restore the normal operating low-low level set point for the decant tank level transmitter; the system should return to normal operation.

Test the mechanical level float switch low-low level alarm by pulling the float out of the water and allowing it to hang straight downward. This should prompt injection pump P-300 to shut down and an alarm should be indicated by the PLC. Once proper functionality is confirmed, return the mechanical level float switch to its normal position within the decant tank; the system should return to normal operation.

LAHH-300, high-high level in Tank T-300:

High-high level alarm testing for the system decant tank includes a test of both the level transmitter set point and the mechanical level float switch. Test the level transmitter high-high level alarm by adjusting the high-high level set point at the PLC to a depth below the existing water level in the tank. This should prompt transfer pump P-200 and both extraction well pumps to shut down, solenoid valve SV-900 to close, motorized valve XCV-200 to close, and an alarm should be indicated by the PLC. Once proper functionality is confirmed, restore the normal operating high-high level set point for the decant tank level transmitter; the system should return to normal operation.

Test the mechanical level float switch high-high level alarm by physically tipping the float from its normal vertical position to upside down. This should prompt transfer pump P-200 and both extraction well pumps to shut down, solenoid valve SV-900 to close, motorized valve XCV-200 to close, and an alarm should be indicated by the PLC. Once proper functionality is confirmed, return the mechanical level float switch to its normal position within the decant tank; the system should return to normal operation.

AAL-300, low dissolved oxygen (DO) concentration in tank T-300:

Test the low DO concentration in tank T-300 by adjusting the DO set point to a concentration above normal/current DO concentration in the decant tank. This should prompt an alarm at the PLC. Once proper functionality is confirmed, return the DO concentration set point to its normal value.

PAH-300, high pressure in the discharge piping of injection pump P-300:

Test the high-pressure alarms for the system by adjusting the high-pressure set point at the pressure transmitter to a pressure 5 to 10 psi below normal operating pressure of the piping in which it is installed. This should prompt transfer pump P-200, injection pump P-300, and both extraction well pumps to shut down; solenoid valve SV-900 to close; motorized valve XCV-200 to close; and an alarm should be indicated by the PLC. Once proper functionality is confirmed, restore the normal operating high pressure set point for the pressure transmitter; the system should return to normal operation.

FAL-700, low flow from injection pump P-300:

Test the low-flow alarm for the system injection pump by adjusting the low-flow set point at the PLC to a flow 5 to 10 gpm above the normal/current flow coming from the injection pump. After a 20- to 30-second delay, this should prompt transfer pump P-200, injection pump P-300, and both extraction well pumps to shut down; solenoid valve SV-900 to close; motorized valve XCV-200 to close; and an alarm should be indicated by the PLC. Once proper functionality is confirmed, restore the normal operating low-flow set point for the injection pump flow meter; the system should return to normal operation.

YA-P-300, auxiliary contact failure/VFD fault for injection pump P-300:

Test auxiliary contact failure/VFD fault for injection pump P-300 by pulling the fuse in the panel that provides the signal to the PLC that the pump is being called to run and is running. With the fuse out of the panel, the operation of transfer pump P-200 and both extraction well pumps should be disabled, solenoid valve SV-900 should remain closed, motorized valve XCV-200 should remain closed, and an alarm should be indicated by the PLC. Once proper functionality is confirmed, replace the fuse and restart the system; the system should return to normal operation.

LAHH-700 through LAHH-704, high-high level at infiltration trenches:

Generally, the level transducers for the infiltration trenches will be kept dry within the trench still well; therefore, a wet bucket test will be required to test the functionality of the high-high level alarm at the infiltration trenches. At each infiltration trench, remove the level transducer and secure within a 5-gallon bucket at a level approximately half way inside of the bucket. Fill the buck with water and adjust the high-high level alarm set point until a positive alarm test is achieved. If the level transducer in the infiltration trench still well is typically submerged in water during normal operations, the high-high level alarm set point can be adjusted to a depth below the normal/current depth in the trench still well. This should prompt transfer pump P-200, injection pump P-300, and both extraction well pumps to shut down; solenoid valve SV-900 to close; motorized valve XCV-200 to close; and an alarm should be indicated by the PLC. Once proper functionality is confirmed, replace the level transducers and restart the system; the system should return to normal operation.

LAHH-705 through LAHH-708, high-high level at injection wells:

Test the injection well high-high level alarm by adjusting the high-high level set point at the PLC to a depth below the existing water level in the injection well. This should prompt transfer pump P-200, injection pump P-300, and both extraction well pumps to shut down; solenoid valve SV-900 to close; motorized valve XCV-200 to close; and an alarm should be indicated by the PLC. Once proper functionality is confirmed, restore the normal operating high-high

level set point for the injection well level transducer; the system should return to normal operation.

TAL-800, low building temperature:

Test the low building temperature alarm by adjusting the low temperature set point to a temperature greater than the current building temperature. This should prompt an alarm at the PLC. Once proper functionality is confirmed, restore the normal operating low building temperature set point.

LAHH-800, high-high level in the building sump:

The level transducer for the building sump will be kept dry; therefore, a wet bucket test will be required to test the functionality of the high-high level alarm. Remove the level transducer and secure within a 5-gallon bucket at a level approximately half way inside the bucket. Fill the buck with water and adjust the high-high level alarm set point until a positive alarm test is achieved. An alarm condition should prompt transfer pump P-200, injection pump P-300, and both extraction well pumps to shut down; solenoid valve SV-900 to close; motorized valve XCV-200 to close; and an alarm should be indicated by the PLC. Once proper functionality is confirmed, replace the level transducer and restart the system; the System should return to normal operation.

AAH-800, high oxygen concentration within the building:

Test the high oxygen concentration alarm by adjusting the high oxygen concentration set point to a set point lower normal oxygen levels in the building. This should prompt an alarm at the PLC. Once proper functionality is confirmed, restore the normal operating high oxygen concentration set point.

ARCADIS
Infrastructure, environment, buildings

Imagine the result

Chain-of-Custody, Handling, Packing and Shipping

Rev. #: 2

Rev Date: March 6, 2009

Approval Signatures

Prepared by: _____ Date: 3/6/09
Caron Koll

Reviewed by: _____ Date: 3/6/09
Jane Kennedy(Technical Expert)

I. Scope and Application

This Standard Operating Procedure (SOP) describes the chain-of-custody, handling, packing, and shipping procedures for the management of samples to decrease the potential for cross-contamination, tampering, mis-identification, and breakage, and to insure that samples are maintained in a controlled environment from the time of collection until receipt by the analytical laboratory.

II. Personnel Qualifications

ARCADIS field sampling personnel will have current health and safety training, including 40-hour HAZWOPER training, Department of Transportation (DOT) training, site supervisor training, and site-specific training, as needed. In addition, ARCADIS field sampling personnel will be versed in the relevant SOPs and possess the skills and experience necessary to successfully complete the desired field work.

III. Equipment List

The following list provides materials that may be required for each project. Project documents and sample collection requirements should be reviewed prior to initiating field operations:

- indelible ink pens (black or blue);
- polyethylene bags (resealable-type);
- clear packing tape, strapping tape, duct tape;
- chain of custody
- DOT shipping forms, as applicable
- custody seals or tape;
- appropriate sample containers and labels,;
- insulated coolers of adequate size for samples and sufficient ice to maintain 4°C during collection and transfer of samples;
- wet ice;
- cushioning and absorbent material (i.e., bubble wrap or bags);

- temperature blank
- sample return shipping papers and addresses; and
- field notebook.

IV. Cautions

Review project requirements and select appropriate supplies prior to field mobilization.

Insure that appropriate sample containers with applicable preservatives, coolers, and packing material have been supplied by the laboratory.

Understand the offsite transfer requirements for the facility at which samples are collected.

If overnight courier service is required schedule pick-up or know where the drop-off service center is located and the hours of operation. Prior to using air transportation, confirm air shipment is acceptable under DOT and International Air Transport Association (IATA) regulation

Schedule pick-up time for laboratory courier or know location of laboratory/service center and hours of operation.

Understand DOT and IATA shipping requirements and evaluate dangerous goods shipping regulations relative to the samples being collected (i.e. complete an ARCADIS shipping determination). Review the ARCADIS SOPs for shipping, packaging and labeling of dangerous goods. Potential samples requiring compliance with this DOT regulation include:

- Methanol preservation for Volatile Organic Compounds in soil samples
- Non-aqueous phase liquids (NAPL)

V. Health and Safety Considerations

Follow health and safety procedures outlined in the project/site Health and Safety Plan (HASP).

Use caution and appropriate cut resistant gloves when tightening lids to 40 mL vials. These vials can break while tightening and can lacerate hand. Amber vials (thinner glass) are more prone to breakage.

Some sample containers contain preservatives.

- The preservatives must be retained in the sample container and should in no instance be rinsed out.
- Preservatives may be corrosive and standard care should be exercised to reduce potential contact to personnel skin or clothing. Follow project safety procedures if spillage is observed.
- If sample container caps are broken discard the bottle. Do not use for sample collection.

VI. Procedure

Chain-of-Custody Procedures

1. Prior to collecting samples, complete the chain-of-custody record header information by filling in the project number, project name, and the name(s) of the sampling technician(s) and other relevant project information. Attachment 1 provides an example chain-o- custody record

2. Chain-of-custody information MUST be printed legibly using indelible ink (black or blue).

3. After sample collection, enter the individual sample information on the chain-of-custody:

    a. Sample Identification indicates the well number or soil location that the sample was collected from. Appropriate values for this field include well locations, grid points, or soil boring identification numbers (e.g., MW-3, X-20, SB-30). When the depth interval is included, the complete sample ID would be “SB-30 (0.5-1.0) where the depth interval is in feet. Please note it is very important that the use of hyphens in sample names and depth units (i.e., feet or inches) remain consistent for all samples entered on the chain-of-custody form. DO NOT use the apostrophe or quotes in the sample ID. Sample names may also use the abbreviations “FB,” “TB,” and “DUP” as prefixes or suffixes to indicate that the sample is a field blank, trip blank, or field duplicate, respectively. NOTE: The sample

nomenclature may be dictated by the project database and require unique identification for each sample collected for the project. Consult the project data management plan for additional information regarding sample identification.

b. List the date o sample collection. The date format to be followed should be mm/dd/yy (e.g., 03/07/09) or mm/dd/yyyy (e.g. 03/07/2009).

c. List the time that the sample was collected. The time value should be presented using military format. For example, 3:15 P.M. should be entered as 15:15.

d. The composite field should be checked if the sample is a composite over a period of time or from several different locations and mixed prior to placing in sample containers.

e. The “Grab”. field should be marked with an “X” if the sample was collected as an individual grab sample. (e.g. monitoring well sample or soil interval).

f. Any sample preservation should be noted.

g. The analytical parameters that the samples are being analyzed for should be written legibly on the diagonal lines. As much detail as possible should be presented to allow the analytical laboratory to properly analyze the samples. For example, polychlorinated biphenyl (PCB) analyses may be represented by entering “PCBs” or “Method 8082.” Multiple methods and/or analytical parameters may be combined for each column (e.g., PCBs/VOCs/SVOCs or 8082/8260/8270). These columns should also be used to present project-specific parameter lists (e.g., Appendix IX+3 target analyte list. Each sample that requires a particular parameter analysis will be identified by placing the number of containers in the appropriate analytical parameter column. For metals in particular, indicate which metals are required.

h. Number of containers for each method requested. This information may be included under the parameter or as a total for the sample based on the chain of custody form used.

i. Note which samples should be used for site specific matrix spikes.

j. Indicate any special project requirements.

k. Indicate turnaround time required.

l. Provide contact name and phone number in the event that problems are encountered when samples are received at the laboratory.

m. If available attach the Laboratory Task Order or Work Authorization forms

n. The remarks field should be used to communicate special analytical requirements to the laboratory. These requirements may be on a per sample basis such as “extract and hold sample until notified,” or may be used to inform the laboratory of special reporting requirements for the entire sample delivery group (SDG). Reporting requirements that should be specified in the remarks column include: 1) turnaround time; 2) contact and address where data reports should be sent; 3) name of laboratory project manager; and 4) type of sample preservation used.

o. The “Relinquished By” field should contain the signature of the sampling technician who relinquished custody of the samples to the shipping courier or the analytical laboratory.

p. The “Date” field following the signature block indicates the date the samples were relinquished. The date format should be mm/dd/yyyy (e.g., 03/07/2005).

q. The “Time” field following the signature block indicates the time that the samples were relinquished. The time value should be presented using military format. For example, 3:15 P.M. should be entered as 15:15.

r. The “Received By” section is signed by sample courier or laboratory representative who received the samples from the sampling technician or it is signed upon laboratory receipt from the overnight courier service.

3. Complete as many chain-of-custody forms as necessary to properly document the collection and transfer of the samples to the analytical laboratory.

4. Upon completing the chain-of-custody forms, forward two copies to the analytical laboratory and retain one copy for the field records.

5. If electronic chain-of-custody forms are utilized, sign the form and make 1 copy for ARCADIS internal records and forward the original with the samples to the laboratory.

Handling Procedures

1. After completing the sample collection procedures, record the following information in the field notebook with indelible ink:

   - project number and site name;
   - sample identification code and other sample identification information, if appropriate;
   - sampling method;
   - date;
   - name of sampler(s);
   - time;
   - location (project reference);
   - location of field duplicates and both sample identifications;
   - locations that field QC samples were collected including equipment blanks, field blanks and additional sample volume for matrix spikes; and
   - any comments.

2. Complete the sample label with the following information in indelible ink:

   - sample type (e.g., surface water);
   - sample identification code and other sample identification information, if applicable;
   - analysis required;
   - date;
   - time sampled; and
   - initials of sampling personnel;

- sample matrix; and
- preservative added, if applicable.

3. Cover the label with clear packing tape to secure the label onto the container and to protect the label from liquid.

4. Confirm that all caps on the sample containers are secure and tightly closed.

5. In some instances it may be necessary to wrap the sample container cap with clear packing tape to prevent it from becoming loose.

6. For some projects individual custody seals may be required. Custody seal evidence tape may be placed on the shipping container or they may be placed on each sample container such that the cooler or cap cannot be opened without breaking the custody seal. The custody seal should be initialed and dated prior to relinquishing the samples.

Packing Procedures

Following collection, samples must be placed on wet ice to initiate cooling to 4°C immediately. Retain samples on ice until ready to pack for shipment to the laboratory.

1. Secure the outside and inside of the drain plug at the bottom of the cooler being used for sample transport with “Duct” tape.

2. Place a new large heavy duty plastic garbage bag inside each cooler

3. Place each sample bottle wrapped in bubble wrap inside the garbage bag. VOC vials may be grouped by sample in individual resealable plastic bags). If a cooler temperature blank is supplied by the laboratory, it should be packaged following the same procedures as the samples. If the laboratory did not include a temperature blank, do not add one. Place 1 to 2 inches of cushioning material (i.e., vermiculite) at the bottom of the cooler.

4. Place the sealed sample containers upright in the cooler.

5. Package ice in large resealable plastic bags and place inside the large garbage bag in the cooler. Samples placed on ice will be cooled to and maintained at a temperature of approximately 4°C.

6. Fill the remaining space in the cooler with cushioning material such as bubble wrap. The cooler must be securely packed and cushioned in an upright position and be surrounded (Note: to comply with 49 CFR 173.4, filled cooler must not exceed 64 pounds).

7. Place the completed chain-of-custody record(s) in a large resealable bag and tape the bag to the inside of the cooler lid.

8. Close the lid of the cooler and fasten with packing tape.

9. Wrap strapping tape around both ends of the cooler.

10. Mark the cooler on the outside with the following information: shipping address, return address, “Fragile, Handle with Care” labels on the top and on one side, and arrows indicating “This Side Up” on two adjacent sides.

11. Place custody seal evidence tape over front right and back left of the cooler lid, initial and date, then cover with clear plastic tape.

Note: Procedure numbers 2, 3, 5, and 6 may be modified in cases where laboratories provide customized shipping coolers. These cooler types are designed so the sample bottles and ice packs fit snugly within preformed styrofoam cushioning and insulating packing material.

Shipping Procedures

1. All samples will be delivered by an express carrier within 48 hours of sample collection. Alternatively, samples may be delivered directly to the laboratory or laboratory service center or a laboratory courier may be used for sample pickup.

2. If parameters with short holding times are required (e.g., VOCs [EnCore™ Sampler], nitrate, nitrite, ortho-phosphate and BOD), sampling personnel will take precautions to ship or deliver samples to the laboratory so that the holding times will not be exceeded.

3. Samples must be maintained at 4°C+2°C until shipment and through receipt at the laboratory

4. All shipments must be in accordance with DOT regulations and ARCADIS dangerous goods shipping SOPs.

5. When the samples are received by the laboratory, laboratory personnel will complete the chain-of-custody by recording the date and time of receipt of samples, measuring and recording the internal temperature of the shipping container, and checking the sample identification numbers on the containers to ensure they correspond with the chain-of-custody forms.

Any deviations between the chain-of-custody and the sample containers, broken containers, or temperature excursions will be communicated to ARCADIS immediately by the laboratory.

VII. Waste Management

Not applicable

VIII. Data Recording and Management

Chain-of-custody records will be transmitted to the ARCADIS PM or designee at the end of each day unless otherwise directed by the ARCADIS PM. The sampling team leader retains copies of the chain-of-custody forms for filing in . the project file. Record retention shall be in accordance with project requirements.

IX. Quality Assurance

Chain-of-custody forms will be legibly completed in accordance with the applicable project documents such as Sampling and Analysis Plan (SAP), Quality Assurance Project Plan (QAPP), Work Plan, or other project guidance documents. A copy of the completed chain-of-custody form will be sent to the ARCADIS Project Manager or designee for review.

X. References

Not Applicable

Attachment 1

ARCADIS
Infrastructure, environment, facilities

ID#:

CHAIN OF CUSTODY & LABORATORY ANALYSIS REQUEST FORM

Page ___ of ___

Lab Work Order #

Send Results to:

Contact & Company Name: | Telephone:
Address: | Fax:
City | State | Zip | E-mail Address:
Project Name/Location (City, State): | Project #:
Sampler's Printed Name: | Sampler's Signature:

Preservative							
Filtered (✓)							
# of Containers							
Container Information							

PARAMETER ANALYSIS & METHOD

Keys

Preservation Key:
A. H_2SO_4
B. HCL
C. HNO_3
D. NaOH
E. None
F. Other: _____
G. Other: _____
H. Other: _____

Container Information Key:
1. 40 ml Vial
2. 1 L Amber
3. 250 ml Plastic
4. 500 ml Plastic
5. Encore
6. 2 oz. Glass
7. 4 oz. Glass
8. 8 oz. Glass
9. Other: _____
10. Other: _____

Matrix Key:
SO - Soil | SE - Sediment | NL - NAPL/Oil
W - Water | SL - Sludge | SW - Sample Wipe
T - Tissue | A - Air | Other: _____

Sample ID	Collection Date	Collection Time	Type (✓) Comp	Type (✓) Grab	Matrix								REMARKS

Special Instructions/Comments:

☐ **Special QA/QC Instructions(✓):**

Laboratory Information and Receipt		Relinquished By	Received By	Relinquished By	Laboratory Received By
Lab Name:	Cooler Custody Seal (✓)	Printed Name:	Printed Name:	Printed Name:	Printed Name:
☐ Cooler packed with ice (✓)	☐ Intact ☐ Not Intact	Signature:	Signature:	Signature:	Signature:
Specify Turnaround Requirements:	Sample Receipt:	Firm:	Firm/Courier:	Firm/Courier:	Firm:
Shipping Tracking #:	Condition/Cooler Temp: _____	Date/Time:	Date/Time:	Date/Time:	Date/Time:

20030826 CofC AR Form 01.12.2007

Distribution: **WHITE – Laboratory returns with results** **YELLOW – Lab copy** **PINK – Retained by BBL**

EXECUTIVE SUMMARY

It is ARCADIS' policy that our staff will not enter confined spaces of any type unless it is absolutely necessary. If it becomes necessary to enter confined spaces, this standard, at a minimum will be strictly followed. A summary of the important requirements for managing the risks of confined spaces are summarized below.

- Potential confined spaces in the work area that could be purposely or mistakenly entered by ARCADIS or subcontractor staff must be identified as confined spaces. Entry is forbidden into these spaces until they are classified. If no entry is necessary, classification is not required.

- If entry is or may be required, the spaces must be evaluated and classified as to being permit-required or non-permit required confined spaces. The client or property owner may have done this already, but this must be verified.

- Non-Permit Required Confined Spaces

    - Entry into non-permit required confined spaces is allowed but only it has been appropriately evaluated and verified that all hazards are adequately controlled - **TRACK**

    - Personnel entering non-permit required spaces must complete confined space awareness training per ARCADIS training requirements

- Permit-Required Confined Spaces

    - Permit-required confined spaces must be marked to identify them as such if not already.

    - A thorough hazard analysis of the space and the activities that could create hazards in the space must be completed – **TRACK**

    - A permit package must be completed prior to any entry, including the evaluation form, the permit form and the confined space entry checklist

    - All hazards must be appropriately controlled and verified before entry

    - Permit must be reissued for each entry and cancelled at the completion of an entry. Cancelled permits should be maintained in the project files.

    - An air monitoring plan and implementation of the plan is required for the entry

    - Entrants must be outfitted with appropriate equipment including PPE and rescue

    - A pre-planned rescue plan is required including identification of rescue services and trained personnel

- Awareness level confined space training is required for all staff who work where confined spaces may be present. Those who enter or serve as Attendants, Entry Supervisors or Rescuers must complete classroom training approved by Corporate H&S

1. POLICY

It is ARCADIS' policy that staff will not enter confined spaces of any type unless it is absolutely necessary. If it becomes necessary to enter confined spaces, this standard, at a minimum will be strictly followed.

2. PURPOSE AND SCOPE

2.1 Purpose

This standard sets forth the accepted practice for confined space entry and establishes the requirement for a Confined Space Entry Permit protocol to effectively mitigate or eliminate the hazards presented by entry into confined spaces.

2.2 Scope

This standard applies to all employees of ARCADIS-US who may work around or in confined spaces. Only trained and authorized personnel are permitted to enter confined spaces, supervise confined space activities, serve as an attendant during confined space activities and perform entry or non-entry rescues from confined spaces.

3. DEFINITIONS

See Definitions in Exhibit 1.

4. RESPONSIBILITIES

4.1 Attendants

- An Attendant is prohibited from monitoring the activities of more than one confined space entry.
- An Attendant must be stationed and remain stationed outside the permit space at all times during entry operations. The Attendant may have no other duties besides those listed in this section.
- All Attendants must have training and instruction in their duties and responsibilities regarding confined space entry. The following are assigned duties:
    - Maintain an accurate count of all entrants in the confined space
    - Monitor activities both inside and outside the confined space to verify the continued safety of entrants
    - Maintain visual contact or verbal communication with all entrants in the confined space at all times

- Order evacuation of the confined space if an uncontrolled hazard develops, either within or outside the confined space, or upon observing a behavioral effect of hazard exposure among entrants
- Warn unauthorized persons away from the confined space
- Participate in non-entry rescue
- Summon rescue and other emergency services

- Attendants must maintain current certification in basic first aid and cardiopulmonary resuscitation (CPR).
- Under no circumstances should the Attendant attempt rescue of entrants by entering the confined space.
- In addition to a dedicated Attendant a second standby employee must be present in the area within sight or call to assist as necessary. This standby person could be the Entry Supervisor if different than the Attendant.

4.2 Authorized Entrants

Entrants must have training and instruction in their duties and responsibilities regarding confined space entry. All authorized entrants must:

- Recognize the hazards which may be faced during entry, as well as the signs and symptoms of exposure to the hazard(s).
- Shall confirm that all isolation, Lock/Out and Tag/outs have been completed prior to entry into confined space.
- Maintain visual contact and/or verbal communications with the Attendant at all times.
- Use the PPE, air monitoring and testing equipment that has been provided.
- Maintain an awareness of all external barriers required to protect from external hazards (e.g., blanking, blocking and lockout) and the proper use of those barriers.
- Obey evacuation orders given by the Attendant, Entry Supervisor, automatic alarm activation, or when self-perceived.

4.3 Entry Supervisors (also see Training and Duties of Entry Supervisor)

- Issue, authorize, and post the Entry Permit prior to any confined space entry.
- Interface with the client representative to identify hazards associated with the client's confined space.
- Review existing confined space data (if any) recorded by the client.

- Review the client's confined space standard.
- Investigate the client's permit entry protocol, ensuring that any identified hazards and previous experience with the confined space is properly communicated.
- Coordinate entry operations with the client's employees when both client and ARCADIS employees will be working in or near a permit space.
- Coordinate rescue assistance with either the client's in-house rescue team and/or the offsite rescue assistance specified by the client. The offsite rescue assistance specified by the client must have direct rescue experience in the client's identified confined space or be provided an opportunity to examine the space and practice a rescue.
- Verify that the client takes the necessary precautions in notifying their employees that our employees will be entering the confined space.
- Review the lockout/tagout and isolation measures implemented by the client.
- Immediately report any unusual or unforeseen confined space entry hazard to Corporate Health and Safety prior to authorizing entry.
- Should test all atmosphere conditions prior to entry and shall complete and maintain the confined space permit form, and have it accessible for review on the job site at all times.
- Offer all entrants an opportunity to review the confined space entry testing results and an opportunity to request a reevaluation of the permit space in the presence of the entrant if the entrant has reason to believe that the evaluation of the space may not have been adequate.
- Upon completion of the entry covered by the permit, and after all entrants have exited the permit space, cancel the Entry Permit.
- Verify that copies of the completed and canceled Entry Permits are properly disseminated to Corporate Health and Safety and retained with the project files, as specified in Section 8.0I – Records.
- Identify and label confined spaces under ARCADIS long-term control.

The Entry Supervisor may also function as the Attendant; therefore, the Entry Supervisor must have the training specified for an Attendant and will assume the duties listed for either the Entry Supervisor or Attendant.

4.4 Corporate H&S with Division and Practice Experts

On an annual basis, review and update, as necessary, this standard. In addition, review cancelled entry permits periodically to ensure conformance to this standard. Provide the initial confined space entry training and retraining, or recommend qualified training provider, to all Entry Supervisors, entrants and Attendants. Provide technical assistance regarding confined space entry protocol, atmospheric testing equipment, PPE, hazard assessment

and research information on unusual hazards. Audit project-specific confined space entry for compliance with this SOP. Retain a file of cancelled Confined Space Entry Permits for annual review.

4.5 Principal in Charge (PIC), Project Manager (PM), and Task Manager (TM)

Are responsible to:

- Verify that all confined spaces and entry protocols are properly identified and addressed within the project work plan, project health & safety plan, and/or other project-related documents.
- Verify that their divisional or project team employees have received the proper confined space training provided by Corporate Health & Safety or qualified training source prior to conducting confined space entry activities.
- Verify that the proper confined space entry equipment, including PPE, atmospheric testing equipment and safety equipment, is available for use by their divisional employees.
- Verify that copies of the completed and canceled Entry Permits are properly disseminated to Corporate Health and Safety and retained with the project files.
- Identify client requirements and assure they are communicated to the project team.

4.6 Health and Safety Plan Writers and Reviewers

Utilize this standard as guidance to ensure the appropriate identification, assessment and control of confined space spaces and associated entries for documentation in project HASPs

4.7 Rescue Services

Two types of rescue may be initiated during confined space work, entry rescue and non-entry rescue. Rescue services in this standard refer to both entry rescue and non-entry rescue. Entry rescue is typically provided by an outside service such as a local fire brigade. ARCADIS employees are prohibited from conducting entry rescues, and will only participate in non-entry rescue if trained to do so.

Whenever ARCADIS or subcontractor personnel enter a permit-required confined space, a written plan must be in place for the rescue of those employees from the space, as needed. The rescue service must:

- Be available and always be on alert for all confined space entries as required.
- Be familiar with all equipment used for the task.
- Have proper training and preparation for confined space rescue.
- Use the PPE and rescue equipment necessary for making rescues from confined spaces.

- Know basic first aid and cardiopulmonary resuscitation (CPR); at least one member of the rescue service shall hold current certification in first aid and CPR.
- Perform assigned rescue duties competently.
- Receive the required authorized entrants' training.
- Practice making confined space rescues using the following:
    - Dummies, mannequins or actual people
    - Representatives spaces to simulate the types of confined spaces from which the rescue is be performed
- Complete training at least once every 12 months, with training certification reviewed by the Entry Supervisor.
- Have ready access to the appropriate PPE and equipment necessary to safely retrieve injured or collapsed personnel from the confined space
- Consider ready access to first aid provisions during job planning
- Gather information on every confined space entry task, including exact location, immediately prior to work commencing and before and after breaks

4.8 All ARCADIS Employees

Use the TRACK process described below regularly and frequently. In addition, employees read and understand all documented hazard identification and risk assessments conducted using the HARC process and documented in HASPs, JSAs, and other written plans that are associated with their work. ARCADIS employees will:

- Participate in entry operations only if trained and authorized to do so
- Never enter a confined space without an authorized Attendant, Entry Supervisor, and a completed Entry Permit
- Never attempt entry rescue within a confined space unless trained in entry rescue
- If unexpected conditions arise during entry, immediately notify other entrants, evacuate the space and inform the Entry Supervisor

5. PROCEDURES AND PRACTICES

Structures or facilities that could be deemed confined spaces may include but not be limited to:

- Enclosed drains or sewers
- Excavations and trenches
- Process vessels and exchanges

- Road and rail tankers
- Silos
- Storage tanks
- Sumps
- Well vaults
- Crawl spaces

A confined space can be permitted or non-permitted, which is determined by through the completion of a comprehensive evaluation of hazards to appropriate controls are implemented to ensure entry is completed safely.

5.1 What is a Confined Space?

A Confined Space is any enclosed space which:

- Is large enough and so configured that an employee can bodily enter and perform work.
- Has limited or restricted means for entry or exit.
- Is not intended for continuous employee occupancy.

5.2 What is a Permit-Required Confined Space?

A Permit-Required Confined Space is a confined space that has one or more of the following characteristics:

- Contains or has a known potential to contain a hazardous atmosphere.
- Contains a material with the potential for engulfment of an Entrant.
- Has an internal configuration such that an Entrant could be trapped or asphyxiated by inwardly converging walls or a floor which slopes downward and tapers to a smaller cross-section.
- Contains any recognized safety or health hazard capable of causing injury or death.
- Contains job-introduced hazards such as welding, cutting, grinding, hot riveting, burning, heating, or the introduction or sources of ignition within the confined space, asbestos or lead containing material removal, or the use of flammable or toxic cleaning solvents.

5.3 What is Confined Space Entry?

Entry constitutes the act by which an employee intentionally passes through an opening into a permit-required confined space. Entry is considered to have occurred as soon as any part of the employee's body breaks the plane of the opening into the space.

5.4 What are the Potential Hazards of a Confined Space?

All parties involved in confined space entry will be competent to recognize hazards that may be associated with a confined space. The parties involved, as part of the evaluation process, will perform a hazard analysis and assessment of the space to identify associated hazards for each space identified if entry is required. Appropriate controls will then be implemented before entry. The potential hazards of a confined space include but are not limited to:

- Presence of flammable substances and oxygen enrichment which can lead to fire or explosion (Chemical).
- Toxic gases, fumes or vapors which can result in acute local or systemic health effects (Chemical).
- Inert gases which can result in asphyxiation (Chemical).
- Oxygen-deficient atmospheres which can result in asphyxiation (Chemical).
- Liquids or solids that can engulf an Entrant (Mechanical, Motion).
- Extreme temperatures which can result in heat-stress, cold stress, or mental acuity decline (Environment).
- Mechanical or electrical equipment which can result in bodily injury if contacted (Mechanical, Electrical).
- Working at heights when entering and exiting which can result in falls (Gravity).
- Slippery or uneven walking surfaces (Gravity, Mechanical).
- Elevated noise levels from activities and echoing (Sound).
- Low light levels (Radiation, Environment).
- Stressful, confined work areas (Personal safety).
- Poisonous or biting insects or animals, bacteria, biological materials, sanitary wastes (Biological).

5.5 Confined Space Identification and Evaluation

On an ARCADIS project site or work location, information about confined spaces, including their location and characteristics, near the work site must be obtained from the owner or operator of the confined space. In turn, ARCADIS will then inform its subcontractors, as appropriate.

In addition, prior to the initiation of activities, ARCADIS will:

- Verify the location of the identified confined spaces and confirm no others exist in its work area
- Evaluate each space in accordance with the criteria defined in this Program utilizing the Confined Space Evaluation Form and Instruction Guide. This form then becomes part of the Entry permit package if entry is necessary.
- Classify the confined spaces as to whether they are permit- or non-permit required. This may include additional consulting with the client, outside agencies and other necessary entities, as appropriate. ARCADIS can upgrade the classification beyond the client's classification; however ARCADIS will not downgrade the classification.
- Ensure the spaces are marked accordingly by either the client, site owner, or ARCADIS, as appropriate.

Permit-required confined spaces will be marked as indicated below or similarly:

Danger - - Permit-Required Confined Space, Do Not Enter

Non-permit required spaces may also be marked as appropriate to notify others that it is a confined space.

5.6 General Requirements for Confined Space Entry

5.6.1 Communications

Prior to any confined space entry, a communication system will be established.

For communication during a permit-required space, there should be an established system between:

- the Attendant and the Entrant
- the Attendant and the Entry Supervisor
- The Attendant and the assigned Rescuers. The Attendant will be in constant and direct communication with the Entrants.

Acceptable forms of communication between the Entrant and the Attendant are:

- Hand signals, as long as the Entrants are in constant view of the Attendant

- Intrinsically safe portable radios

The appointed rescue team(s) shall be informed of every permit-required confined space entry task, including the exact location, both immediately prior to work commencing and before and after work breaks. Intrinsically safe portable radios or cellular telephones of summoning help from a rescue service shall be available.

5.6.2 Confined Space Entry Equipment

Confined space entry, whether it be permit or non-permit required entry may require a variety of equipment. This will be evaluated as part of the hazard analysis and evaluation process. This equipment may include, but not limited to the following:

- Signs, barricades or other devices to control access to the confined space and to control the area around the confined space where people will be working.
- Energy control devices as specified by the ARCADIS Lockout / Tagout (LOTO) Control of Hazardous Energy standard.
- Entry devices – ladder, tripod and winch, harness or other mechanism to allow safe entry and non-entry rescue – rescue equipment is required for all permit-required spaces.
- Safety equipment – fire extinguishers, lights, cooling vests.
- Ventilation equipment – fans, blowers or other methods to maintain safe atmospheric conditions within the space.
- Air monitoring – meters to measure the air quality, at a minimum confined space entry meters will be able to measure oxygen, lower explosive limit (LEL), hydrogen sulfide (H_2S) and Carbon monoxide (CO) – these may not be necessary for non-permit required spaces.
- Personal Protective Equipment – selected based on the hazards.

Other equipment may be required based on the nature of the entry and the activities. For example, self-contained breathing apparatus may be necessary for external rescuers for entry rescuers. All equipment must be appropriate for the activities of the entry and be approved or certified as specified by regulatory requirements.

5.7 Non-Permit-Required Confined Space Requirements

If the site, as a result of the evaluation process, is revealed to contain any non-permit required confined spaces, ARCADIS will inform affected employees. Entry into these spaces can be made as follows:

- Entry into a non-permit confined space will be allowed only after review of the inventory/ evaluation form to determine what potential hazards may exist.

- Entry into the non-permit confined space will occur only after all hazards, if any, have been eliminated.

If there are changes in the use or configuration of a non-permit confined space, the space in question must be re-evaluated to determine if any hazards exist. If the hazards cannot be eliminated, the space must be reclassified as a permit required confined space.

Non-Permit Entry is permitted when all atmospheric, egress and other recognized hazards can be eliminated. If this is a sustainable situation, the confined space can be entered as a non-permit required entry. **The confined space entry checklist must still be completed.**

5.8 Reclassifying a Permit-Required to a Non-Permit-Required Confined Space

To reclassify a space from permit required to non-permit required, the following procedures must be used:

- Without entering the space, if all the hazards in the space can be eliminated, (including atmospheric or potential atmospheric hazards), the space may be reclassified as a non-permit required.

- If it is necessary to enter the space to eliminate existing hazards, all requirements for permit required confined space entry must be followed. Once testing or inspection during this entry demonstrates that the hazards within the space have been eliminated, the space may be reclassified as a non-permit required.

- Prior to reclassifying a permit required confined space to a non-permit required confined space, all relevant data that demonstrates the basis for the reclassification must be documented and referenced on the evaluation form.

5.9 Permit-Required Confined Space Entry

After a confined space is determined to be permit-required and entry is necessary to complete the activities, ARCADIS staff will:

- Complete the entry permit package which includes the completed evaluation form, the entry permit, and the entry checklist.

- Evaluate the hazards external to the confined space that may impact the confined space operations including but not limited to pedestrians and vehicles

- Determine the appropriate hazard controls appropriate for the space using the hazard control hierarchy of eliminate, substitute, isolate, engineer out, administratively manage, and provide personal protective equipment

- Develop an appropriate air monitoring program based on the characteristics of the space

- Identify competent Entry Supervisor, Attendant, Entrants and Rescue personnel and establish procedures for the coordination of these staff

5.9.1 Entry Permit Package and Process

The Confined Space Entry Permit Package is made up of the completed Evaluation form, the Entry Permit, and the Entry Checklist. The Entry Permit will be:

- Completed, signed and issued by the Entry Supervisor who will verify that the confined space has been properly evaluated, isolated, drained, washed, purged, flushed ventilated, and tested as appropriate, and that the Entry Checklist and the Evaluation form are completed and part of the permit package.
- Posted at the entrance to the space and remain for the duration of the entry
- Weather-protected to maintain integrity.

In addition, prior to authorizing the Entry Permit, the Entry Supervisor, along with the attendant and Entrants must ensure the following, as applicable.

- All mechanical apparatus (such as agitators) within or connected to the confined space are de-energized, locked-out, and tagged as per the ARCADIS Lockout/Tagout standard.
- All lines connected to the confined space where the nature of the service could present a hazard, such as nitrogen, steam, solvent, acid, or hot water, are isolated from the confined space. Acceptable isolation methods include removing a valve, spool piece, or expansion joint, and blanking or capping the opened end; inserting a suitable full-pressure blank in the piping between connecting flanges; and/or closing and locking at least two valves in the pipeline and locking open to atmosphere a chain valve between the two closed and locked valves.
- All electrical equipment in and around the confined space is de-energized and locked out.
- For confined spaces which have contained a known hazardous chemical (e.g., vessels, storage tanks), have been thoroughly cleaned by appropriate means, e.g., overflowing with water, steaming, etc.
- For confined spaces containing known atmospheric hazards, mechanical ventilation is operating to maintain atmospheric hazards within permit parameters.
- The atmosphere of the confined space is initially checked to verify that it contains acceptable levels of oxygen (19.5 to 23.5%) and is free of hazardous levels of explosive/combustible or toxic gases or vapors. The Atmospheric Testing Section, of this standard lists the air quality specifications which must be met. These specifications are also listed on the Entry Permit. Continuous air monitoring may be required depending on the nature of the confined space, as well as the activity(ies) to be conducted within the confined space.
- All necessary entry equipment (e.g., retrieval lines, PPE, respiratory protective equipment) is available, in good condition, and functional.

- All Entrants and Attendants have received the appropriate confined space entry training.
- All rescue arrangements are in-place as per the section on Outside Rescue Assistance, and that an adequate means of communicating with outside assistance is immediately available to the attendant.

The Entry Permit must be canceled and all Entrants ordered to evacuate the confined space when any one of the following conditions arises:

- A change in initial atmospheric conditions which may jeopardize the continued health and safety of Entrants is detected.
- The attendant must leave the work station.
- The attendant is called on to perform duties which do not allow him/her to fulfill his/her duties as an attendant.
- Whenever ordered by the attendant due to factors external to the confined space which may jeopardize the continued safety and health of Entrants.
- At the end of the work shift and/or whenever a different group of Entrants and Attendants will take charge of the confined space.
- Whenever Entrants self-perceive danger and self-initiate evacuation.
- At the termination of confined space entry.
- At the end of the work shift in which the entry occurs.

5.9.2 Other Confined Space Entry Permit Requirements

Additional Entry Permit package requirements are:

- A separate Entry Permit must be generated for each confined space. However, a single Entry Permit may be generated for entry into multiple sewer system manholes in a continuous sewer system.
- The completed permit package is valid for one shift only. A new permit and checklist must be completed with each new entry. However, if the activities are the same as those evaluated on the evaluation form, a new evaluation form is not required.
- A new completed and signed Entry Permit Package must be issued for each new crew of Entrants and Attendants.

5.9.3 Evaluation of External Hazards

Prior to any confined space entry, hazards external to the space will be evaluated to ensure protection of Entrants and others. This evaluation is done as part of the ARCADIS TRACK process, the development of JLAs for the job, and the daily tailgate meeting on site. These external hazards may also be evaluated through the development of the site specific health and safety plan.

5.9.4 Atmospheric Testing

All confined spaces will be tested for atmospheric hazards as outlined below. Results of this testing will be documented on the Entry permit.

- Each confined space will be initially tested prior to the Entry Supervisor authorizing entry.
- Each confined space will also be tested continuously or at intervals as specified by the Entry Supervisor based on the characteristics and hazards identified associated with the space, even when mechanical ventilation is utilized.
- The following are the testing sequence and acceptable air quality criteria:
    - Oxygen content for all confined space entry must be 19.5 to 23.5% (Oxygen must be measured first)
    - Combustible gas or vapor must not exceed 10% of its Lower Explosive Limit (LEL)
    - Toxic gas or vapor must not exceed 50% of the OSHA Permissible Exposure Limit (PEL) or other published exposure guidelines whichever is lower
    - Carbon monoxide must not exceed 10 parts per million (ppm)
    - Hydrogen sulfide must not exceed 0.5 ppm
- If it is necessary to enter a confined space where any of the following atmospheric conditions exist, all Entrants must wear either a NIOSH approved self-contained breathing apparatus (SCBA) of at least 60-minute duration or an air line respirator with emergency SCBA, as delineated below.
    - Initial atmospheric testing indicates conditions outside the parameters listed on the Entry Permit. However, no entry will be made, even with respiratory protection, if combustible gases/vapors are greater than 10% of the LEL or oxygen is greater than 23%
    - Initial atmospheric testing indicates conditions within permit parameters, but where the quality of the atmosphere remains questionable
    - Despite initial atmospheric testing results, activities to be performed while in the confined space would endanger Entrants by creating a sudden change in atmospheric conditions within the space. This activities may include but are

not limited to welding, painting, coating, cutting, using solvents, or agitating bottom sediments

- o Mechanical ventilation will not maintain atmospheric hazards within permit limits

- Under no circumstances is entry into a confined space having an IDLH condition (less than 19.5% oxygen or >5% of the LEL) permitted by any employee of ARCADIS. (10% of the LEL is safe from a flammability standpoint, but may pose certain other hazards from a health risk, thus, entry is not permitted if conditions measure more than 5% of the LEL)

- Results of all atmospheric testing must be recorded on the Confined Space Entry Permit and/or an attached air monitoring log found in the HASP.

- Entrants and their representatives have the opportunity to participate in all air monitoring and air monitoring instrument calibration, and to review all air monitoring data prior to entry to the space.

5.9.5 Mechanical Ventilation

Mechanical ventilation may be:

- Utilized to maintain the atmospheric conditions hazards within entry limits.

- Used to force clean air into a space or remove contaminated air from the space.

Ventilation systems must be set up to adequately ventilate all areas of the space and be locked in the “on” position. The space must be evacuated if the system fails.

Air intake must be positioned to prevent the introduction of air contamination into the confined space (e.g., away from vehicle exhaust, tank vents).

5.9.6 Work Practices

The following Work Practices must be followed for Permit-Required Confined Space Entry.

- All Entrants must wear a retrieval line secured on one end to the Entrant by a full-body harness, or parachute harness, and the end secured outside the space unless this creates more of a hazard.

- If there is not a fixed retrieval line, a suitable means for rescue appropriate for the configuration of space, must be provided.

- For vertical-entry spaces, the lifeline must be secured to a lifting or other mechanical retrieval device affixed to a suitable anchor point. Reliance on manually lifting an Entrant from a vertical confined space is prohibited. If more than one Entrant is entering the space, each line shall be clearly marked to identify the Entrant and the mechanical retrieval system must be rated for multiple Entrant use.

- Whenever a ladder is required for entry, it must be secured and not withdrawn while anyone remains within the confined space, except as necessary to permit extraction during rescue.
- Adequate, explosion proof illumination must be provided for entry as necessary.
- Electrical equipment used within a confined space must be explosion-proof and be inspected prior to use to verify good working condition. The equipment must utilize a ground fault interrupt and/or be properly grounded.
- Whenever the confined space is structured such that visual contact cannot be maintained between Entrants and the attendant, intrinsically-safe, two-way radios must be utilized to maintain continuous contact between Entrants and Attendants.
- All confined spaces must be isolated prior to entry.
- Prior to opening or removing lids, covers, access doors, or hatches of a confined space, precautions must be taken to determine if it is safe to do so.
- Whenever entering spaces with permanent ladders, all rungs must be inspected to verify they are in safe and useable condition.
- When working in a vertical confined space, precautions must be taken to prevent equipment and personnel from falling into the confined space opening. Tools should be lowered and removed from the space using a basket or sling to prevent falls and falling objects.
- A re-evaluation of the hazards associated with the space will be conducted if it is believed or known that conditions in the space have changed, or if an Entrant requests re-evaluation or air monitoring.
- If ARCADIS staff must enter a space with staff from one or more other employers, no entry will take place until the entry supervisors from each employer coordinate activities and determine and communicate the entry, operations, and exit and rescue procedures for the multi-employer space. Responsibilities and designation of each authorized position will be reviewed and authorized positions will be appropriate staffed with qualified personnel.

5.10 Confined Space Rescue

Rescue services will be provided and be prepared for permit-required confined space entries. Non-entry rescues can be performed by qualified and trained ARCADIS staff. Entry rescues will be performed by external sources that are qualified and competent to perform entry rescues.

5.10.1 Non-Entry Rescue

ARCADIS staff or an external rescue team can provide non-entry rescue if they are property trained and qualified. This training must be completed at least annually and include the actual use of the rescue equipment that will be used during the confined

space entry over which they will provide rescue services. In addition, at least one person on the rescue team must be currently certified in first aid and CPR.

Non-entry rescue will involve the use of retrieval systems or methods to assist in the rescue unless the retrieval equipment increases the overall risk of the entry or does not contribute to the rescue of the Entrants.

For non-entry retrieval, non-entry rescuers shall:

- Ensure the use of a full body harness with a retrieval line attached at the center of the Entrant's back near shoulder level or above the Entrant's head by each authorized Entrant.
- Attach the other end of the retrieval line to a mechanical device or fixed point outside the confined space in such a manner that rescue can begin as soon as the rescuer becomes aware that rescue is necessary.
- Set up a mechanical device and make it ready to retrieve personnel from vertical type confined spaces more than 4 feet deep.
- Use the material safety data sheets or written information if an injured Entrant is exposed to a hazardous substance.
- Provide medical personnel treating the exposed Entrant with the material safety data sheet or written information.

5.10.2 Outside Entry Rescue Assistance

If the Entry Supervisor determines entry rescue may be necessary, an assessment will be completed to verify that the designated rescue service:

- Has adequate resources, training and equipment to provide services for the scope of the planned entry.
- Is within a reasonable response distance/time.

Such rescue assistance must be coordinated with either the client's designated confined space rescue team and/or with a local emergency response team. The selected rescue services must be offered an opportunity to inspect the confined space prior to initiating the entry. Documentation of this offer and the status of the site visit, if conducted, must be maintained by the entry supervisor.

As appropriate, entry shall progress only after proper notification and verification of adequacy of outside rescue assistance prior to the actual entry activity.

An adequate means of communication (e.g., cellular telephone for contacting offsite emergency assistance, air horn, or two-way radio for summoning the rescue team) must be immediately available to the attendant.

5.11 Annual Review of the Confined Space Entry Program

At least annually, ARCADIS will review the confined space program to determine if revisions are required to ensure it is adequate. This review will be accomplished using cancelled entry permits from within the last year, reading and updating this written standard, and via on-site assessments of entry activities. Based on this review, the program and procedures will be revised as appropriate, and then communicated to appropriate staff.

6. TRAINING

All employees who work in the area of potential confined spaces or who enter non-permit required spaces will be trained in awareness level training in order to recognize confined spaces and to understand their hazards. This training is provided during initial and refresher HazWoper training or through specific confined space awareness training.

For entry to permit-required confined spaces, all parties involved including the entry supervisor, Attendants, Entrants and rescuers will take classroom, hands-on training pursuant to their activities. Additional training is provided to these employees if their duties change, or if new hazards are encountered, or if special procedures or activities occur. Site specific training is also provided to address those site-specific hazards and confined spaces encountered on each project.

Rescuers will receive hands-on training pertinent to the type of rescue services they will provide as described in the Rescue section of this document.

All training provided to ARCADIS employees must be reviewed and approved by Corporate Health & Safety and will be managed through the ARCADIS training center.

Documentation of training certification received by attendance at any training course including externally provided training courses will be kept by the employee with copies provided to the ARCADIS training center.

7. REFERENCES

- Confined Space Entry Evaluation Form and Instruction Guide – found on the Community Page of the H&S Team Site
- Confined Space Entry Checklist – found on the Community Page of the H&S Team Site
- Confined Space Entry Permit – found on the Community Page of the H&S Team Site
- ARCADIS Health and Safety Standard ARC HSFS010– Health and Safety Planning
- ARCADIS Health and Safety Standard ARC HSFS004 – Control of Hazardous Energy (Lockout/Tagout)

8. RECORDS

- Training records will be kept by the individual employee with copies of such certificates kept by the ARCADIS training system. Training dates and times will be kept by the ARCADIS training system.
- Confined Space entry permits and cancelled permits will be kept in the project files with copies of cancelled permits kept by Corporate H&S.
- Copies of all HASPs that document confined space procedures will be kept in the project files.

9. APPROVALS AND HISTORY OF CHANGE

Approved By: Michael Thomas, CIH, CPEA, Director H&S Environmental Division

History of Change

Revision Date	Revision Number	Reason for Change
5 May 2008	01	Original document
21 Jan 2009	02	Removed reference to Sewer System Manhole Checklist
27 Jan 2009	03	Corrected discrepancy in acceptable CO levels between Section 5.3.3 and checklist in Exhibit1
29 April 2009	04	Modified and added to several sections to provide more detail per the request of several client via ISN
1 November 2009	05	Modified to include enhancements to the procedures and to meet BP Control of Work Defined Practice for Confined Spaces
1 November 2010	06	Modified format to include an Executive Summary. Also, reviewed and edited text to simplify the text.

Exhibit 1 – Definitions

Attendant is a trained **authorized** individual stationed outside the confined space whose sole duty is to monitor authorized entrants inside the confined space.

Blanking or Blinding is the absolute closure of a pipe, line or duct by the fastening of a solid plate that completely covers the bore and that is designed to withstand the pressure of the pipe, line or duct with no leakage beyond the plate.

Confined Space is any enclosed space which is large enough and so configured that an employee can bodily enter and perform work, has limited or restricted means for entry or exit, and is not intended for continuous employee occupancy. Confined spaces include, but are not limited to, storage tanks, vessels, pits, boilers, flues, manholes, ventilation system ductwork, sewers, vaults, pipelines, silos, storage hoppers, diked areas, and wells greater than 4 feet deep.

Confined Space Entry Permit is the document which defines the conditions of confined space entry, the reasons for entering the confined space, the anticipated hazards of the entry, a listing of atmospheric monitoring equipment, and acceptable atmospheric conditions. The Entry Permit identifies the rescue and other contacts which must be summoned in the case of an emergency, provides a listing of authorized attendants and entrants, the date of entry to the confined space, and the expiration of the Entry Permit. For the purposes of this HSP, the Confined Space Entry Permit package consists of the Confined Space Entry Checklist (Exhibit 1), the Confined Space Entry Permit (Exhibit 2), and the Confined Space Evaluation Form (Exhibit 3). The Entry permit package must be re-issued at the beginning of each shift.

Double block and bleed – the closure of a line, duct, or pipe by closing and locking or tagging two inline valves and by opening and locking or tagging a drain or vent valve in the line between the two closed valves.

Engulfment is the surrounding and effective capturing of a person by a liquid or finely divided (flow-able) solid substance that can cause death by filling or plugging the respiratory system or exert force on the body to cause death by strangulation, constriction or crushing

Entrants are employee's who are trained and **authorized** to enter a confined space.

Entry constitutes the act by which an employee intentionally passes through an opening into a permit-required confined space. Entry is considered to have occurred as soon as any part of the employee's body breaks the plane of the opening into the space.

Entry Supervisor is the trained, competent and **authorized** employee responsible for determining if acceptable entry conditions are present at a permit space where entry is planned, for authorizing entry and overseeing entry operations, and for terminating entry. The Entry Supervisor may also serve as an authorized attendant.

Hazardous Atmosphere is an atmosphere which exposes employees to a risk of death, incapacitation, injury, or acute illness from one or more of the following:

- An atmospheric concentration of any substance in excess of 50% of its established permissible exposure limit (PEL); or in the absence of a PEL, its assigned threshold limits value (TLV) or other value listed on the Material Safety Data Sheet (MSDS) for the chemical constituent whichever is lower.

- A flammable gas, vapor, or mist in excess of 5% of its lower explosive limit (LEL).
- An airborne combustible dust at a concentration that obscures vision at a distance of 5 feet or less or is above the LEL.
- An atmospheric oxygen concentration below 19.5% (oxygen-deficient atmosphere) or above 23.5% (oxygen-enriched atmosphere).
- An atmosphere which is immediately dangerous to life and health.

Hot Work Permit – the written authorization to perform operations (for example, riveting, welding, cutting, burning, and heating) capable of providing a source of ignition.

Immediately Danger to Life and Health (IDLH) means any condition which poses an immediate threat to loss of life; may result in irreversible or immediate-severe health effects; may result in eye damage, irritation, or other conditions which could impair escape from the confined space.

Inerting – the displacement of the atmosphere in a permit space by a noncombustible gas (such as nitrogen) t such an extent that the resulting atmosphere is non-combustible. This procedure produces an IDLH oxygen deficient atmosphere.

Isolation involves removing equipment/systems in and around the space from service. This includes but is not limited to lockout/tagout, double blanking and bleeding, disconnecting and securing or restraining equipment.

Lower Explosive Limit (LEL) is the minimum concentration (percentage) of a flammable gas that will propagate a flame in the presence of an ignition source. The more explosive the gas, the lower the LEL. LEL is usually expressed as a percentage (from zero to 100 percent explosive) and is often used interchangeably with lower flammability limit

Non-Permit Confined Space is a confined space that does not contain or have the potential to contain any hazards capable of causing death or serious physical harm.

Oxygen-deficient Atmosphere is an atmosphere containing less than 19.5 percent oxygen by volume.

Oxygen-enriched Atmosphere is an atmosphere containing more than 23.5 percent oxygen by volume.

Permit-Required Confined Space (Permit Space) is a confined space that has one or more of the following characteristics:

- Contains or has a known potential to contain a hazardous atmosphere
- Contains a material with the potential for engulfment of an entrant
- Has an internal configuration such that an entrant could be trapped or asphyxiated by inwardly converging walls or a floor which slopes downward and tapers to a smaller cross-section
- Contains any recognized safety or health hazard capable of causing injury or death.

- Contains job-introduced hazards such as welding, cutting, grinding, hot riveting, burning, heating, or the introduction or sources of ignition within the confined space, asbestos or lead containing material removal, or the use of flammable or toxic cleaning solvents

- Is an excavation or trench that is deeper than three feet.

Prohibited Condition is any condition in a permit space that is not allowed by the permit during the period when entry is authorized

Rescue Service is the team or entity designated to rescue personnel from confined spaces

Self-rescue is an entrant's ability to escape unaided from a confined space

Retrieval system – the equipment (including a retrieval line, chest or full-body harness, wristlets, if appropriate, and a lifting device or anchor) used for non-entry rescue of persons from confined spaces.

EXECUTIVE SUMMARY

This Health and Safety Standard (HSS) sets forth minimum requirements for ARCADIS personnel to conduct work involving electricity. There are various physical controls protecting personnel from the hazards related to electricity including: insulation, guarding, grounding, de-energizing equipment and electrical protective devices. In addition, administrative procedures such as safe work-practices, employee training, routine maintenance, inspections and program audits also provide administrative controls to appropriately and adequately protect ARCADIS personnel.

- The HSS for conducting electrical work apply to projects and operations conducted at ARCADIS offices, project sites, client facilities, and any other work-related location where ARCADIS employees carry-out activities that directly or indirectly expose these employees to hazards of electricity.
- An Electrical Energy Control Program must be established for each project or activity where ARCADIS personnel (including subs) perform work on devices with electrical energy sources. This program is developed for the control of potentially hazardous electrical energy when ARCADIS personnel are engaged in the installation testing, servicing (trouble-shooting) and/or maintenance of equipment.
- All electrical equipment used on the project or activity is listed by a national testing laboratory for the specific application for which it is used.
- All electrical equipment, which is routinely serviced or is being troubleshooting while energized by ARCADIS/subcontractor, is inventoried and listed in the project Health and Safety Plan (HASP).
- Only Qualified Persons will be permitted to work on electrical conductors or circuit parts that have not been put into an electrically safe work condition.
- Only Qualified Persons shall perform testing work within the Limited Approach Boundary of energized electrical conductors or circuit parts operating at 50 volts or more.
- All electrical equipment (e.g. switchboards, panel boards, industrial control panels, motor control centers, etc.) in areas that are likely to require examination, adjustment, servicing (trouble-shooting), or maintenance while energized, are labeled (NFPA 70E compliant) to warn Qualified Persons and others of the potential electrical shock and arc flash hazards.
- When working outside or in damp or wet environments, only Ground Fault Circuit Interrupters (GFCI) or GFCI protected receptacles shall be used.
- When working on energized electrical conductors or circuit parts that are not placed in an electrically safe work condition (i.e., for the reasons of increased or additional hazards or infeasibility per section 130.1 of NFPA 70E), work to be performed shall be considered energized electrical work and shall be performed by written permit only.
- Work within the Arc Flash Protection Boundary will require the use of Personal Protective Equipment.

1. POLICY

Minimizing the risk of incidents is the fundamental criterion to be satisfied when working on, performing maintenance activities on, and/or installing electrical equipment. The core criteria to this standard are as follows:

- Anything that has been, could be, or is charged with electricity is considered to be energized until the employee has conducted a verification test and knows with certainty that it is no longer energized and is controlled with an appropriate lockable device and cannot be energized during the time ARCADIS staff is in contact with or in the vicinity of that item.

- Appropriate safe work practices and controls, as required by this policy and associated ARCADIS procedures, are employed to prevent electric shock, arc flash burns or other injuries resulting from either direct or indirect electrical contacts. Specific work practices and controls are to be consistent with the nature and extent of the associated electrical hazards.

- All servicing of electrical equipment shall be performed by Qualified Persons who operate in strict compliance with ARCADIS electrical safety requirements, including Lockout/Tagout (LOTO), arc-flash, and shock hazard safety requirements. Qualified individuals shall possess working knowledge of the various systems upon which work is being performed.

- Routine work is planned carefully, following the ARCADIS TRACK process, and scheduled well in advance. Work assignments are planned to include the competently Qualified Personnel to perform the work. All electrical work will only be performed once all appropriate equipment has been procured, including all required Personal Protective Equipment (PPE) and analytical equipment (appropriately-rated digital voltmeter, etc.) and LOTO equipment, as appropriate.

- When emergency work is required (including trouble-shooting), electrical safety is not compromised in favor of maintaining the project schedule or budget. Equipment outages (including de-energization and LOTO) are scheduled in lieu of working on energized equipment, whenever possible. When power shutdown is not possible, a signed Energized Electrical Work Permit from a Qualified Employee must be provided (Exhibit 2). Note: testing, troubleshooting and voltage measuring is excluded from the permit requirement, but must only be conducted by Qualified Persons.

- No ARCADIS employee works on or installs electrical equipment that requires electrical power source of equal to or greater than 480 volts unless appropriately qualified and approved by ARCADIS Corporate H&S.

This Electrical Safety Standard does not include design requirements for electrical equipment and/or work on or directly associated with electrical generation, transmission, or distribution installations. The PLC panels that ARCADIS designs/builds are excluded from this standard as this work is covered by other standard requirements established by the ARCADIS Technical Knowledge and Innovation group.

2. PURPOSE AND SCOPE

2.1 Purpose

2.1.1 Prevention

The basic purpose of the ARCADIS electrical safety Health and Safety Standard (HSS) is to prevent accidents, injuries and equipment damage. Electrical accidents are caused by a combination of the following controllable factors:

- Insufficient training or knowledge of the hazards and hazard controls
- At-risk behaviors or work practices
- Inappropriate equipment and/or installation
- Workplaces made unsafe by the environment
- Insufficient preparation for the expected task

There are various physical controls protecting personnel from the hazards related to electricity including: insulation, guarding, grounding, de-energizing equipment and electrical protective devices. In addition, administrative procedures such as safe work-practices, employee training, routine maintenance, inspections and program audits also provide administrative controls to appropriately and adequately protect ARCADIS personnel. This HSS sets forth minimum requirements for ARCADIS personnel to conduct work involving electricity.

2.1.2 Defining Hazards

This HSS addresses electrical work as the hazardous energy source. The HSS make reference to the control of hazardous energy LO/TO program and the Hand/Power Tools HSS. Employees covered by this standard must also follow the ARCADIS LO/TO HSS ARC HSFS004 and the ARCADIS Hand/Power Tool HSS ARC HSFS008.

2.1.3 Providing Guidance

The standard and procedures also provide guidance and minimum training and competency requirements for ARCADIS employees, who potentially face a risk of electrical shock, arc flash, or related injuries, when they are working with or are in/and around electrical equipment.

2.2 Scope

2.2.1 HSS Application

The HSS for conducting electrical work apply to every project and all operations conducted at ARCADIS offices, project sites, client facilities, and any other work-related location where ARCADIS employees carry-out activities that directly or indirectly expose these employees to hazards of electricity.

2.2.2 Exposure

This HSS applies to all ARCADIS US work operations conducted involving electrical systems where employees may be exposed to energized electrical parts and/or those parts that have been de-energized.

3. DEFINITIONS

There are a number of definitions associated with this standard and associated procedures. These definitions are presented in Exhibit 1 of this document.

4. RESPONSIBILITY

4.1 PICs, Project Managers, Task Managers and Corporate Service Managers

Are responsible for implementing this HSS on any project that poses electrical hazards to ARCADIS employees or employees of its subcontractors, clients, and other organizations present in the vicinity of work controlled by ARCADIS. These individuals are responsible for communicating and appropriately managing subcontractors, ensuring that employees have appropriate training and qualifications, and for reviewing all opportunities of electrical work performed by or supervised by ARCADIS as specified in this standard and procedure. These individuals are responsible for involving the appropriate ARCADIS H&S Staff and for ensuring that all subcontractors have been communicated with concerning the minimum H&S requirements for the activity involving electricity.

4.2 Division HS Directors

Are responsible for communicating with all PICs, PMs, APMs, Location Leaders, and Corporate Services Managers within ARCADIS and ensuring they are aware of this HSS and for ensuring it is being implemented effectively**.**

4.3 Operations Managers and Supervisors

Operations managers and supervisors that have oversight management for the health and safety of employees in their respective operations assures that appropriate time is provided to facilitate the development of electrical control procedures and for personnel training.

4.4 ARCADIS Employees

ARCADIS employees are responsible for implementing the TRACK (**T**hink through the task, **R**ecognize the hazard, **A**ssess the risk, **C**ontrol the risk, **K**eep H&S first in all things) process before any and all work related to electricity and adhere to this electrical standard and associated electrical procedures set forth by ARCADIS Corporate H&S and communicate H&S concerns, issues and questions to their supervisor or their respective Health and Safety contact prior to initiating work.

5. STANDARDS AND PRACTICES

5.1 Procedure

The following elements support this ARCADIS Electric Safety HSS. Each element, briefly described below, has its own detailed procedure and is associated with this standard.

5.1.1 Electrical Energy Control Program

An Electrical Energy Control Program is established for each project or activity where ARCADIS personnel (including subs) perform work on devices with electrical energy sources. This program consists of energy control procedures (including the identification of the hazardous energy sources as required by the Control of Hazardous Energy Standard - ARC HSFS004), employee training requirements, and periodic inspections to ensure that before any employee performs any servicing (trouble-shooting, and includes the testing of this equipment during the build-out) or maintenance on a machine or equipment where the unexpected energizing, startup or release of stored energy could occur and cause injury, the machine or equipment shall be isolated from the energy source and rendered inoperative. The Electrical Energy Control Program also includes a general section on installation requirements and safeguards. Refer to ARCADIS Control of Hazardous Energy (Lockout/Tagout) Procedure ARC HSFS004 for an Equipment Specific LO/TO Procedure template.

This Electrical Energy Control Program can be part of the project's health and safety plan or JLA.

5.1.2 Electrical Energy Control Procedure

An Electrical Energy Control Procedure is developed, documented and utilized for the control of potentially hazardous electrical energy when ARCADIS personnel are engaged in the installation testing, servicing (trouble-shooting) and/or maintenance of equipment. The Electrical Energy Control Procedure includes specific requirements for the installation of electrical equipment. This procedure serves as the Electrical Energy Control Procedure.

5.1.3 Protective Devices

Protective Devices (e.g. locks, tags, chains, wedges, key blocks, adapter pins, self-locking fasteners, or other hardware) and **Personal Protective Equipment (PPE)** is provided, specified in the Electrical Task Hazard Assessment sheets (Exhibit 8), and used by ARCADIS personnel. These devices and PPE are used for isolating, securing or blocking of machines

or equipment from electrical energy sources, and during servicing (trouble-shooting) equipment, and installation of this equipment.

5.1.4 Assessment Procedure

An Assessment Procedure is developed to cover the specifications required for periodic assessments. These assessments, to be conducted periodically (at least annually) of each project employing Electrical Energy Control Procedure(s), ensures that the Electrical Energy Control Procedure(s) and the requirements of Electrical Energy Control Program are being followed. Details on the control of hazardous energy are outlined in the ARCADIS Control of Hazardous Energy (Lockout/Tagout) Procedure ARC HSFS004.

5.1.5 Electrical Safety Training

ARCADIS provides Electrical Safety Training to include the arc flash safety training to appropriate personnel to ensure that the purpose and function of the Electrical Energy Control Program and Procedures are understood and that the knowledge and skills required for the safe operation (including, servicing, maintenance, and installation) are acquired.

5.1.6 Outside Personnel

Whenever outside servicing personnel (Contractors/Subcontractors) are to be engaged in activities covered by the control of hazardous energy sources (re: Control of Hazardous Energy Standard - ARC HSFS004) and this HSS, ARCADIS and the outside servicing employer shall inform each other of their respective energy control procedures

Per NFPA 70E, when ARCADIS contracts with a subcontractor to perform electrical work, it serves as the Host Employer and has certain responsibilities and will inform the subcontractor of:

- Known electrical hazards that are related to the subcontractor's work, and that might not be recognized by the subcontractor or its employees. If work is being performed by a subcontractor on client owned and operated equipment, ARCADIS will coordinate communication to verify that the electrical subcontractor has the required information.

- Information about ARCADIS' installation that the subcontractor needs to make the appropriate electrical hazard assessments and analyses

In addition, ARCADIS will report observed subcontractor-related issues related to electrical safety as appropriate.

The ARCADIS subcontractor will:

- Ensure that each of its employees is instructed in the hazards communicated to it by ARCADIS in addition to ensuring that its employees meet all training and qualification requirements of NFPA 70E and OSHA.

- Ensure that each of its employees follow the work practices required by this HSS, the NFPA 70E standard, and the project HASP.

- Advise ARCADIS of:

  - Any unique hazards presented by the subcontractor's work.

  - Any unanticipated hazards found during the subcontractor's work that ARCADIS did not mention.

  - The measures the subcontractor took to correct any issues identified or raised by ARCADIS to the subcontractor and to prevent them from occurring again.

5.2 Electrical Energy Control Program

This Electrical Energy Control Program procedure provides general information and work requirements for ARCADIS employees working on projects. A project-specific Electrical Energy Control Program, which includes an electrical safety analysis to be performed as part of the Health and Safety Plan (HASP) development, is established for each project site where ARCADIS' personnel perform work on hazardous energy sources. The following elements are required in a project-specific Electrical Energy Control Program:

5.2.1 General Requirements

- All electrical equipment used on the project or activity is listed by a national testing laboratory for the specific application for which it is used.

- All electrical equipment, which is routinely serviced or is being troubleshooting while energized by ARCADIS/subcontractor, is inventoried and listed in the project Health and Safety Plan (HASP).

- All electrical equipment (e.g. switchboards, panel boards, industrial control panels, motor control centers, etc.) in areas that are likely to require examination, adjustment, servicing (trouble-shooting), or maintenance while energized, are labeled (NFPA 70E compliant) to warn Qualified Persons and others of the potential electrical shock and arc flash hazards. The marking label will be located on the equipment so that the label is clearly visible to those qualified person(s) performing work or those who are not qualified. Examples of NFPA 70E compliant marking labels are provided in Exhibit 1.

  – *Note:* Exempted from arc and shock labeling requirements are equipment or appliances which are equipped with a cord and disconnectable plug or which operate on 120V alternating current (AC) or less. Such equipment is to be serviced in the totally de-energized state by unplugging the AC cord.

  – Safety-related work practices are employed by Qualified Persons to prevent electric shock or other injuries resulting from either direct or indirect electrical contacts, when

work is performed near or on equipment or circuits that are or may be energized (consistent with their training and with specific energy control procedures).

- The specific safety-related work practices are consistent with the nature and extent of the associated electrical hazards.

- System enclosures containing multiple energy sources are required to be appropriately labeled with a label warning of multiple energy sources, and directing operation personnel to the procedure for eliminating all alternate sources of energy.

- Live parts to which an employee may be exposed are de-energized before the employee works on or near them, unless it is demonstrated that de-energizing introduces additional or increased hazards or is infeasible due to the work requiring the equipment to be energized, equipment design or operational limitations.

- Live parts that operate at less than 50 volts to ground need not be de-energized if there is no increased exposure to electrical burns or to explosion due to electric arcs.

- Visual inspection of portable cord and plug connected equipment and flexible cord sets (extension cords) is conducted before use on any shift for external defects (such as loose parts, deformed and missing pins, or damage to outer jacket or insulation) and for evidence of possible internal damage (such as pinched or crushed outer jacket). Cord and plug connected equipment and flexible cord sets (extension cords) that remain connected once they are put in place and are not exposed to damage need not be visually inspected until they are relocated.

- If there is a defect or evidence of damage that might expose an employee to injury, the defective or damaged item are removed from service, and no employee may use it until repairs and tests necessary to render the equipment safe have been made.

- When an attachment plug is to be connected to a receptacle (including on a cord set), the relationship of the plug and receptacle contacts shall first be checked to ensure that they are of proper mating configurations.

- If the exposed live parts are not de-energized (e.g., for reasons of increased or additional hazards or infeasibility), other safety-related work practices are used to protect employees who may be exposed to the electrical hazards involved.

- Such work practices serve to protect employees against contact with energized circuit parts directly with any part of their body or indirectly through some other conductive object.

- When working outside or in damp or wet environments, only Ground Fault Circuit Interrupters (GFCI) or GFCI protected receptacles shall be used.

- Employees may not enter spaces containing exposed energized parts, unless illumination is provided that enables the employees to perform the work safely. Where lack of illumination or an obstruction precludes observation of the work to be performed, employees may not perform tasks near exposed energized parts. Employees may not reach blindly into areas which may contain energized parts.

- Conductive articles of jewelry and clothing (such a watch bands, bracelets, rings, key chains, necklaces, metalized aprons, cloth with conductive thread, or metal headgear) may not be worn if they might contact exposed energized parts. *Note: However, such articles may be worn if they are rendered nonconductive by covering, wrapping, or other insulating means.*

- For conductive materials and equipment that are in contact with any part of an employee's body, employees are instructed (through daily tailgate meetings, job briefings, review of the health and safety plan, etc.) to handle these materials/equipment in a manner that will prevent them from contacting exposed energized conductors or circuit parts. If an employee must handle long dimensional conductive objects (such as ducts and pipes) in areas with exposed energized electrical parts, the work practices will be instituted (such as the use of insulation, guarding, and material handling techniques) to minimize the hazard.

5.2.2 Working on or Near Exposed De-energized Electrical Equipment Requirements

See ARCADIS Standard Operating Procedure ARC HSFS004 - Control of Hazardous Energy for LO/TO requirements.

5.2.3 Disconnecting and Over-current Protection Requirements

- All circuits are protected from over-current conditions based upon the current-carrying capacity of the conductors being used. *Note:* The only grounded conductor that can be opened without opening all other phase conductors is the control circuit neutral of a starter via an auxiliary contact of the overload but only if the overload relay and motor contactor are in the same enclosure.

- No overcurrent devices are incorporated into any permanently grounded conductor unless the device opens all conductors simultaneously.

- Overcurrent protection devices, circuit breakers, and disconnect switches are placed so that they are readily accessible for maintenance and use, reasonably protected from physical damage, and located, shielded, or enclosed to prevent personal injury from arcing, moving parts, or accidental operation. No easily ignitable materials are placed in the vicinity of any overcurrent protection devices.

- Circuit breakers and disconnect switches are clearly labeled to indicate the energized and de-energized positions, as well as the equipment or circuit it supplies. All circuit

breaker panels fuse boxes, and control panels are securely mounted and constructed with close fitting doors or panels to prevent unauthorized access or injury.

- All circuit breaker fused switches and non-fused switches used as a disconnect means shall be capable of being locked in the off position.

- All electrical panels, devices, and boxes located out of doors or in wet locations are placed in a weatherproof enclosure or cabinet.

5.2.4 Grounding Requirements

- All electrical circuits are grounded in accordance with NEC and National Electric Safety Code (NESC) regulations. Any conductor used as a ground is clearly identifiable and distinguishable from all other conductors.

- Any grounded conductor or grounding terminal on a receptacle, cord, or device is not utilized for any purpose other than grounding.

- *NEC* 250.52(A)(5) states: “Rods and pipe electrodes shall not be less than 2.44 m (8 ft.) in length.

- *NEC* 250.52(A) (5)(b) states, “Grounding electrodes of stainless steel and copper or zinc coated steel shall be at least 15.87 mm (5/8 in.) in diameter, unless listed and not less than 12.70 mm (1/2 in.) in diameter.” Listing agencies CSA, ETL, MET, UL, etc., will only list rods that are greater than ½ inch in diameter and that have the correct minimum amount of copper or zinc (galvanized) mil thickness coating.

- All grounding rods are tested after installation with a suitable earth/ground resistance tester to ensure minimal resistance (25 ohms or less). If the resistance measurement is greater than 25 ohms, an additional grounding rod must be installed at least 6 feet from the original grounding rod, and bonded together (with the correct size bonding jumper according the sizing table of Article 250) to create one grounding electrode.

- Equipment grounding conductors shall be sized not less than the minimum conductor size listed in the equipment grounding conductor sizing table of Article 250 of the latest edition of the NEC. *Equipment grounding conductors are sized based on the overcurrent protective device and not the ungrounded conductor size.*

- When temporarily bonding and grounding equipment, the leads are attached to the grounding point first. When disconnecting temporary bonding or grounding leads, disconnect the grounding point last. Appropriate PPE must be worn according to NFPA 70E safe work practices.

- The equipment end is attached and removed using insulated tools or similar means.

- Prior to use, all equipment, receptacles, electrical power tools, portable light strings, cord-sets, etc., are inspected and instrument tested by a qualified person to ensure ground circuit continuity.

- Additional tests are performed prior to returning equipment to service following repairs, or an incident that may have caused damage, or at intervals not to exceed three months. All tests are recorded, including equipment type and number, repairs made, and date of test. No equipment, tool, or devices are put into service if damaged.

- All portable tools, lights, or devices utilize three-conductor, grounded cord-sets unless protected by an approved system of double insulation. All temporary 120-volt, single phase, 15- and 20-ampere receptacles are installed with GFCI for personal protection. GFCI receptacles shall be tested to ensure proper operation. If the test button does not trip the receptacle, a portable *in-line* GFCI protective device shall be used.

- Where permanent receptacles are installed without GFCI protection, in-line GFCI receptacles are utilized between the permanent receptacle and the portable powered device.

5.2.5 Temporary Wiring Requirements

- General

  - A certified, licensed electrician installs temporary wiring.

  - Any portable lighting units will have a protective guard surrounding the light bulb.

  - Spent light bulbs are replaced promptly and disposed of according to federal, state, provincial, local jurisdiction, or client requirements.

  - No exposed or empty sockets are permitted.

  - If any receptacles are required for use in wet locations, they are contained in a weatherproof enclosure. The integrity of the weatherproof enclosure is not affected when a plug is inserted.

  - Extension cords are not fastened with staples, hung from nails, or suspended by wire.

  - Temporary light strings are not suspended by their cords unless specifically designed for that purpose. Each lamp is equipped with a suitable guard.

  - All temporary lighting exposed to wet or hazardous conditions in confined spaces are operated at a maximum of 12 volts and protected by an approved switch near the entrance to interrupt the power in the event of an emergency.

- Extension cords are placed so as not to be damaged by sharp objects, moving equipment, or excessive heat. *Note:* Multiple extension cords should not be used to extend the overall length. An extension cord current rating is based on the cord's length. A short cord will have smaller conductors for a given current rating than a longer cord of the same current rating. This is due to the impedance of the conductor. A shorter cord has less impedance. The manufacturer picks a conductor size at the cord length that when the rated current is applied to the cord, the voltage drop is insignificant. If the cord is extended by plugging in another cord, the impedance goes up and in order to have no appreciable voltage drop, the current, must be less. If the same current were applied to the extended cord, it could overheat. Therefore, a cord should be selected with the length needed for the current rating needed. Longer cords for a given current rating have larger conductors than shorter cords for the same current rating.

- Connectors are placed above ground and protected from water, and cords are either suspended above walkways or covered to eliminate tripping hazards and protect the cord from damage.

- Cords are not suspended by conductive material.

- All cord sets used in wet locations will have approved plugs molded to the cord insulation, and all receptacles used in wet locations are contained in a weatherproof enclosure that is not affected when a cord-set is inserted.

5.2.6 Working Space about Electric Equipment

- Sufficient access in the vicinity of and working space is provided and maintained about all electric equipment to permit ready and safe operation and maintenance of such equipment. See the most current NEC for working clearance requirements.

- The dimension of the working space in the direction of access to live parts operating at 600 volts or less and likely to require examination, adjustment, servicing (trouble-shooting), or maintenance while alive may not be less than indicated in Table A. In addition to the distances shown in Table A, workspace may not be less than 30 inches wide in front of the electric equipment. Working space is not required in back of assemblies such as dead-front switchboards or motor control centers where there are no renewable or adjustable parts such as fuses or switches on the back and where all connections are accessible from locations other than the back.

Table A - Working Clearances

	Minimum Clear Distance for Condition (ft)		
Nominal voltage to ground	a	b	c
0-150	3	3	3
151-600	3	3 ½	4

Conditions a, b, and c, are as follows:

Exposed live parts on one side and no live or grounded parts on the other side of the working space, or exposed live parts on both sides effectively guarded by suitable wood or other insulating material. Insulated wire or insulated bus-bars operating at not over 300 volts are not considered live parts.

Exposed live parts on one side and grounded parts on the other side.

Exposed live parts on both sides of the workspace *[not guarded as provided in Condition a]* with the operator between.

5.2.7 Guarding of Live Parts

Except as required or permitted elsewhere, live parts of electric equipment operating at 50 volts or more are guarded against accidental contact by approved cabinets or other forms of approved enclosures. This guarding is to be accomplished by suitable permanent, substantial partitions or screens so arranged that only Qualified Persons will have access to the space within reach of the live parts. Any openings in such partitions or screens are so sized and located that persons are not likely to come into accidental contact with the live parts or to bring conducting objects into contact with them.

5.3 Energized Electrical Work Permit Requirement

When working on energized electrical conductors or circuit parts that are not placed in an electrically safe work condition (i.e., for the reasons of increased or additional hazards or infeasibility per section 130.1 of NFPA 70E), work to be performed shall be considered energized electrical work and shall be performed by written permit only. The energized electrical work permit shall include, but not be limited to, the following items:

1. A description of the circuit and equipment to be worked on and their location
2. Justification for why the work must be performed in an energized condition
3. A description of the safe work practices to be employed

4. Results of the shock hazard analysis or technique that will be used to determine appropriate PPE. The standard tables with designated protection in the NFPA 70E standard or attached hazard Task Hazard Assessments may be used in lieu of a shock hazard analysis. If a shock hazard analysis is conducted it must be performed by a Qualified Person with advanced training in the NFPA standard and calculation of shock hazards.
5. Determination of shock protection boundaries
6. Results of the arc flash hazard analysis
7. The arc flash protection boundary
8. The necessary personal protective equipment to safely perform the assigned task
9. Means employed to restrict the access of unQualified Persons from the work area
10. Evidence of completion of a job briefing, including a discussion of any job-specific hazards
11. Energized work approval (authorizing or responsible management, safety officer, or owner, etc.)

Refer to Exhibit 2 for an Energized Electrical Work Permit.

Exemptions to Energized Electrical Work Permit Requirements. Work performed within the Limited Approach Boundary of energized electrical conductors or circuit parts by Qualified Persons related to tasks such as testing, troubleshooting, voltage measuring, etc., shall be permitted to be performed without an energized electrical work permit, provided appropriate safe work practices and personal protective equipment are provided and used. If the purpose of crossing the Limited Approach Boundary is only for visual inspection and the Restricted Approach Boundary will not be crossed, then an energized electrical work permit shall not be required.

5.4 Voltage Meters

5.4.1 Work Practice Controls

This section identifies general work practice controls that employees are expected to comply with while using handheld electrical measurement tools (voltage meters). ARCADIS Electrical Safety standard controls include, but are not limited to, the following:

- Only Qualified Persons shall perform testing work within the Limited Approach Boundary of energized electrical conductors or circuit parts operating at 50 volts or more
- Every electrical conductor or circuit part must be considered energized until proven otherwise.
- No bare-hand contact is to be made with exposed energized electrical conductors or circuit parts above 50 volts to ground.

- De-energizing an electrical conductor or circuit part and making it safe to work on is in itself a potentially hazardous task.

- Use a logical approach to determine potential hazard(s) of task.

- Assess the environment before taking the measurement.

- Do not work alone in hazardous areas.

- Wear appropriate Personal Protective Equipment (PPE) as determined by NFPA 70E. Refer to the Electrical Task Hazard Assessment sheets.

- Make sure your volt meter is rated for the measurement environment.

- Be familiar with and know how to use your test equipment prior to any hazardous measurements.

- Inspect your meter prior to every use: check for a broken case, worn test leads or a faded display. Use the meter's own continuity testing function to check for internal breaks and check test lead resistance:

  1. Insert lead in V/Ω and COM inputs.

  2. Select Ω, touch probe tips. Good leads are 0.1 – 0.3 Ω

- Use the meter's own test capability to ensure that the fuses are in place and working right:

  1. Plug test lead in V/Ω input. Select Ω

  2. Insert probe tip into mA input. Read value.

  3. Insert probe tip into A input. Read Value.

  A good fuse should show a value close to zero. Check your meter manual for the specified range of acceptable readings.

- It is a good practice to measure voltage at the point of the lowest available energy. For example, if you are measuring voltage on a breaker panel, identify the lowest-rated breaker available, and make your measurement there. This way, you have more protection between yourself and the potential hazard.

- Effective steps should be taken to obtain the best reading within the necessary envelope of safety. If conditions require that both of your hands remain free for a safe measurement, set the instrument down; use the instrument's bail stand (if it has one). Better yet, use a magnetic hanger to hang the unit at eye level on the edge of the panel.

Don't try to watch the meter while you make your measurement - always keep your eyes on your test probes.

- When taking single-phase measurements, always connect the neutral lead first, the hot lead second. After taking your reading, disconnect the hot lead first, the grounded lead second.

- When testing for voltage, use the three point test method.

  1. Test a similar known live circuit first

  2. Test the "circuit to be tested"

  3. Re-test the first known live circuit.

  This process verifies your test instrument is working properly - an important part of your personal safety.

- When making measurements in or around high energy three phase distribution panels, use test probes with a minimum amount of exposed metal at the probe tips, such as .12 in (4 mm) metal tip probes. This reduces the risk of an accidental arc flash from probe tips being inadvertently shorted together between phases.

- Keep one hand in your pocket or out of the panel and the measurement circuit. You don't want to offer a closed circuit. Whenever possible, use a properly rated alligator clip to attach the black test lead to the circuit under test. This gives you a free hand to probe with the red test lead.

- ARCADIS has completed various task related electrical hazard assessments for employee review and reference. If a hazard assessment has not been conducted, employees must use Stop Work Authority and complete a Hazard Analysis before proceeding. Refer to Exhibit 8 for the Electrical Task Hazard Analysis.

5.4.2 Voltage Meter Requirements

Voltage meters used by employees must be certified as meeting IEC 61010-1 by third party independent testing laboratories. Recognized independent third party testing laboratories include the Canadian Standards Association (CSA), Technischer Überwachungsverein (TUV), or Underwriters Laboratory (UL). The independent testing laboratory's mark shall appear on the exterior of the instrument.

Note: Instruments for use in North America shall be UL listed and CSA certified to the following standards:

- UL 3111-1 "Standard for Safety for Electrical Measuring and Test Equipment, Part 1" – General Requirements

- UL 3111-2-031 "Handheld Probe Assemblies for Electrical Measurement and Test"
- UL 3111-2-032 "Standard for Safety for Handheld Current Clamps for Electrical Measurement and Test"
- CSA C22.2.1010 "Safety Requirements for Electrical Equipment for Measurement, Control, and Laboratory Use – General Requirements"
- ISA/ANSI 82.01 "Safety Standard for Electrical and Electronic Test Measuring, Controlling, and Related Equipment – General Requirements"

Note: Instruments for use in Europe shall be CE marked and listed by third party independent testing laboratories.

Voltage testing equipment for general use must be a Category III meter rated at 600 Volts for protection against transient voltages (IEC 61010-1). Instruments used outdoors or in outbuildings shall be at least IEC 61010-1 Category IV at 600 Volts. Dependant on the application, it may be necessary to specify instruments capable of measuring higher voltages. All handheld electrical measurement tools used by employees shall be rated for the nominal voltage of the system or component being measured. (refer to Exhibit 4)

As specified in IEC 61010-1, section 9.5.2, overcurrent protection shall be provided within the instrument, and not in the probes or leads. Overcurrent protection shall not be incorporated in instrument probes, so as to prevent a false negative reading while measuring energized equipment. Overcurrent protection may be in the form of fuses, circuit breakers, thermal cutouts, and impedance–limiting circuits or similar means to prevent excessive energy from being drawn into the instrument.

The design of the instrument probes shall minimize the potential for contact with exposed energized parts while performing measurements. Handheld electrical measurement tools shall be equipped with spring-loaded, retractable covers on the instrument probes or flared finger guards. The maximum exposed probe length shall not exceed ¾ inch (1.90 cm)

Handheld electrical measurement tools shall be inspected before each use for damaged insulation on leads and other obvious physical damage. Damaged test instruments shall not be used until authorized repairs have been completed.

All handheld electrical measurement tools shall be tested prior to, and after use, with a known energized electrical source to ensure that the instrument is functioning correctly (Live-Dead-Live approach).

Handheld electrical measurement tools shall not be modified without the written consent of the original equipment manufacturer. The replacement of any defective components must be with identical components to the original or as authorized by the original equipment manufacturer.

5.5 Approach Boundaries to Energized Electrical Conductors or Circuit Parts

5.5.1 Shock Hazard Analysis

A shock hazard analysis shall determine the voltage to which personnel will be exposed, boundary requirements, and the personal protective equipment necessary in order to minimize the possibility of electric shock to personnel.

5.5.2 Shock Protection Boundaries

The shock protection boundaries identified as Limited, Restricted, and Prohibited Approach Boundaries are applicable to the situation in which approaching personnel are exposed to energized electrical conductors or circuit parts. Reference NFPA 70E Table 130.2(C) for the distances associated with various system voltages.

In certain instances, the Arc Flash Protection Boundary might be a greater distance from the exposed energized electrical conductors or circuit parts than the Limited Approach Boundary. The Shock Protection Boundaries and the Arc Flash Hazard Boundary are independent of each other.

5.6 Training, Qualification, and Equipment Requirements

5.6.1 Qualified Persons

"Qualified Person" definitions:

- Level I: Qualified to work on energized 50 - 120 VAC control systems on qualified sites (Qualified sites have been audited for NFPA 70E Hazard Analysis, and have been assigned a value of 0 or 1 in regards to hazard risk categories as determined by NFPA 70E. Other requirements will be discussed). This is the lowest level of qualified individual in the qualification management system. The prerequisites include training and expertise in the use of a digital voltmeter, schematic diagram interpretation and training in all applicable electrical safety programs, including NFPA 70E and LOTO. This assumes that the employee is equipped with all applicable PPE and all appropriate tools and metering equipment.

- Level II: Qualified to work on energized 120 VAC control systems on qualified sites (see above), and to service de-energized switchgear of operating voltages of up to 600 VAC. This Qualification level allows qualified individuals the opportunity to service deenergized 480 VAC equipment, including such tasks as changing fuses, testing components, visual inspections, etc. It will not permit work on any exposed, energized 480 VAC circuits or switchgear.

- Level III Qualified Persons are qualified to work on energized power systems and controls up to 600 VAC providing an Energized Electrical Work Permit is completed (excluding troubleshooting activities) and approved and appropriate PPE and safe

work practices are employed. This includes motor controls, switchgear and variable frequency drives of 600 VAC or less.

- Level IV: Qualified to work on electrical systems of greater than 600 VAC.

- In addition, this standard applies to Infrastructure and PM/CM staff that provide oversight of System/Electrical Installs: There will be situations where engineers and/or construction oversight personnel will need to be within the arc flash boundary to perform inspections/oversight of work completed by subcontractors or Qualified Personnel. These staff will need the NFPA 70E training as well and must wear all appropriate PPE as outlined within this HSS and NFPA 70E.

5.6.2 Electrical Hazards

Employees who face a risk of electrical hazards by the electrical installation (e.g., systems that meet the National Electrical Code and OSHA requirements) are trained per the requirements described below. Employees in these groups do not require training if their work does not bring them within the Limited Approach Boundary (as determined by NFPA 70E Table 130.2(C)) of electric circuits—operating at 50 volts or more to ground—for a hazard to exist. *Note:* Persons outside the arc flash boundary wearing no arc flash protection may still receive second-degree burns, which are considered “curable” burns.

5.6.3 Energized Parts

Qualified persons working on or near exposed energized parts receive training in the following:

- The skills and techniques necessary to distinguish exposed energized parts from other parts of electric equipment.

- The skills and techniques necessary to determine the nominal voltage of exposed live parts.

- The clearance distances specified for working on or near exposed energized parts and the corresponding voltages to which the qualified person will be exposed.

- Trained in the latest requirements of NFPA 70E.

5.6.4 Energized Equipment

Qualified persons’ whose work on energized equipment involves either direct contact, or contact by means of tools or materials, are trained on how to work safely on energized circuits. This training includes the precautionary work practices, personal protective equipment, insulating and shielding materials, and the use of insulated tools. Exposed live work must not be done without an Energized Electrical Work Permit. (Exhibit 2 and NFPA 70 E, Annex J).

5.6.5 Qualified and Unqualified Employee Training

Training for qualified employees will involve classroom and on-the-job training, as appropriate. This training involves some customization to reflect the scope of work performed within project or type of equipment (e.g. PCL cabinets, etc.). The training course will be approved by Corporate H&S.

Unqualified employees (those who do not work on equipment-including trouble shooting) will at a minimum, complete an approved on-line electrical safety awareness course that discusses to some degree NFPA 70E, including [but not limited to] compliance with the Limited Approach Boundaries for shock protection as determined by NFPA 70E Table 130.2(C).

5.6.6 Training Timeframe

Training is performed before the employee is assigned duties involving work around or on electrical systems (including trouble-shooting).

5.6.7 Ongoing Training

Retraining and refresher training is performed whenever inspections indicate that an employee does not have the necessary knowledge or skills to safely work on or around electrical systems. Retraining is also performed when policies or procedures change, NFPA 70E or OSHA Standard is revised/updated and/or new equipment or systems are introduced into the work area.

5.7 Personal Protective Equipment Related to Hazard Analysis and Hazard Risk Category Classification

To determine the appropriate PPE necessary to conduct electrical work on energized equipment, it is necessary to complete an electrical hazard analysis of the equipment as discussed in section 5.2. This hazard analysis will be conducted on projects where exposed energized equipment will require maintenance, troubleshooting or be encountered. The hazard analysis will result in determining Hazard Risk Categories of 0 through 4 by applying Tables 130(C)(9) in the current NFPA 70E. Based on the determined category, the appropriate PPE will be specified for the job as specified in the table shown in Exhibit 3.

The Electrical Task Hazard Assessments, included as Exhibit 8, have been generated for typical ARCADIS staff activities associated with energized electrical equipment. These Electrical Task Hazard Assessments detail the Shock Protection Boundaries (Limited, Restricted and Prohibited), Flash protection boundary, Hazard/Risk Category, Need for Voltage-Rated Tools or Gloves, and Required PPE, including FR clothing rating (and can be used in lieu of a shock hazard analysis)

Nonmelting, flammable fiber garments shall be permitted to be used as underlayers in conjunction with FR garments in a layered system for added protection. If nonmelting, flammable fiber garments are used as underlayers, the system arc rating shall be sufficient to prevent breakopen of the innermost FR layer at the expected arc exposure incident energy

level to prevent ignition of flammable underlayers. Meltable fibers such as acetate, nylon, polyester, polypropylene, and spandex shall not be permitted in fabric underlayers (underwear) next to the skin (exception: an incidental amount of elastic used on nonmelting fabric underwear or socks shall be permitted).

5.8 Program Auditing

On occasion, the ARCADIS electrical safety program will be audited (Loss Prevention Observations or similar) to help ensure that the principles and procedures of the electrical safety program are being followed. The frequency of audit shall be determined by Project Managers, based on the complexity of the procedures and the type of work being covered. Where the audit determines that the principles and procedures of the electrical safety program are not being followed, appropriate corrective actions/revisions will be made.

6. TRAINING

See below references for training requirements. In addition, training requirements are outlined in Section 5 above.

7. REFERENCE DOCUMENTS AND ASSOCIATED STANDARDS

7.1 National Electrical Code (NEC) - NFPA 70

The NEC is the accepted standard for protection of persons and property from electrical installations. Familiarization with NFPA 70 is required for any one whose responsibility is designing, installing, verifying and maintaining safe and compliant electrical systems. Information can be found through the NFPA website with a membership or printed and electronic versions of the code can be purchased from NFPA and other suppliers.

7.2 National Electrical Installation Standards

The NEIS gives definition to "neat and workmanlike manner" as required by the National Electrical Code. Each standard is submitted for approval by the American National Standards Institute (ANSI).

7.3 National Electrical Safety Code (NESC)

The NESC is a product of the Institute of Electrical and Electronics Engineers (IEEE). This code provides information on the installation, operation, and maintenance of electrical systems. The intent of the publication is the safeguarding of persons performing the work. Information, like the NEC, is available with IEEE membership or by buying a printed or electronic version of the code.

7.4 National Fire Protection Association (NFPA)

The NFPA is the definitive source for everything related to fire protection. The association has developed numerous standards that have been adopted by federal, state, and local

jurisdictions as enforceable standards. The NFPA website has plenty of free information but more specific information is restricted to members only.

7.5 National Institute for Occupational Safety and Health (NIOSH)

NIOSH is similar in mission to OSHA but differs by the singular perspective that NIOSH is the federal agency responsible for the prevention of work related disease and injury, and is part of the Centers for Disease Control and Prevention.

7.6 Occupational Health and Safety Administration (OSHA)

OSHA is the main governmental source for effective safety practices. The OSHA website is a vast, readily accessible information resource with a thorough search engine.

7.7 NFPA 70E: Standard for Electrical Safety in the Workplace

This standard addresses electrical safety requirements for employee workplaces that are necessary for the practical safeguarding of employees during activities such as the installation, operation, maintenance, and demolition of electric conductors, electric equipment, signaling and communications conductors and equipment, and raceways for the following:

1. Public and private premises, including buildings, structures, mobile homes, recreational vehicles, and floating buildings

2. Yards, lots, parking lots, carnivals, and industrial substations FPN

3. Installations of conductors and equipment that connect to the supply of electricity

4. Installations used by the electric utility, such as office buildings, warehouses, garages, machine shops, and recreational buildings, that are not an integral part of a generating plant, substation or control center.

7.8 Other related ARCADIS Documents:

Control of Hazardous Energy Procedure (ARC HSFS004) Exhibit 2 – Energized Electrical Work Permit

8. RECORDS

- Audit Records

- Inspection and testing records

- Complete Energized Electrical Work Permits

9. APPROVALS AND HISTORY OF CHANGE

Approved by: Mija A. Coppola, Corporate Director of Health & Safety

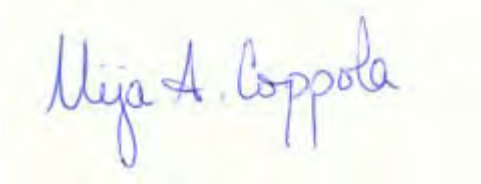

History of Change

Revision Date	Revision Number	Reason for change
26 March 2007	01	Original document
28 June 2007	02	Enhanced for regulatory requirement additions
6 September 2007	03	Changing over to new template format
25 February 2008	04	Template change
10 March 2009	05	Modified to address elements of NFPA 70E and based on review of procedure. Process improvements
6 September 2010	06	Changed author from Mike Thomas to Tony Tremblay. Electrical Task Hazard Assessment Sheets inserted; NFPA 70E reference tables added; Energized Electrical Work Permit requirement clarified; Grounding Rod information added; LO/TO program reference included; Tagging of defective equipment language added; Reference to hand/power tools HS Standard added; Level III Qualified Electrical person definition modified; Volt Meter Specific Information added.
14 April 2011	07	Section 5.8 Program Auditing added and clarified use of NFPA 70E compliant labels on equipment

Exhibit 1 - Definitions

Following are terms and definitions used in the electrical safety standard and associated procedures.

Affected Employee - An employee/worker whose job requires him/her to operate or use a machine or equipment on which servicing or maintenance is being performed under lock-out/tag-out, or whose job requires him/her to work in an area where servicing or maintenance is being performed. An affected employee is not allowed to apply or remove locks or tags.

Arc Flash Hazard – A dangerous condition associated with the possible release of energy caused by an electric arc. An arc flash hazard may exist when energized electrical conductors or circuit parts are exposed or when they are within equipment in a guarded or enclosed condition, provided a person is interacting with the equipment in such a manner that could cause an electric arc. Under normal operating conditions, enclosed energized equipment that has been properly installed and maintained is not likely to pose an arc flash hazard. Refer to NFPA 70E Table 130.7 (C)(9) for examples of activities that could pose an arc flash hazard.

Arc Flash Hazard Analysis – A study investigating a worker's potential exposure to arc flash energy, conducted for the purpose of injury prevention and the determination of safe work practices, arc flash protection boundary, and the appropriate levels of PPE.

Arc Flash Protection Boundary – An approach limit at a distance from exposed live parts, within which a person could receive greater than a second-degree burn if an electrical arc flash were to occur. In those cases where detailed arc flash hazard analysis calculations are not performed for systems that are between 50 volts and 600 volts, the Arc Flash Protection Boundary shall be 4.0 ft, based on the product of clearing time of 2 cycles (0.033 sec) and the available bolted fault current of 50 kA or any combination not exceeding 100 kA cycles (1667 ampere seconds). When the product of clearing times and bolted fault current exceeds 100 kA cycles, the Arc Flash Protection Boundary shall be calculated.

Arc Flash Suit – A complete Flame Resistant (FR) clothing and equipment system that covers the entire body, except for the hands and feet. This includes pants, jacket and beekeeper-type hood fitted with a face shield.

Authorized Employee - An employee/worker who locks out or tags out machines or equipment in order to perform servicing or maintenance on that machine or equipment. Only authorized employees may apply or remove locks or tags.

Bonding - Bonding is the conductive connection of all non-current-carrying metal parts for the purpose of providing a low-resistance, effective fault-current path from the point of a fault back to the source of electricity, which is the closest transformer upstream from the faulted circuit. Connected to establish electrical continuity and conductivity.

Because of the water factor, it is very important to bond ALL non-circuit metal parts together to form a single bonding path back to the source of electricity.

Cabinet - An enclosure designed either for surface or flush mounting, and provided with a frame, mat, or trim in which a swinging door or doors are or may be hung.

Certified - Equipment is "certified" if it (a) has been tested and found by a nationally recognized testing laboratory (e.g. UL certified) to meet nationally recognized standards or to be safe for use in a specified manner, or (b) is of a kind whose production is periodically inspected by a nationally recognized testing laboratory, and (c) it bears a label, tag, or other record of certification.

Circuit breaker

- 600 volts nominal, or less - A device designed to open and close a circuit by non-automatic means and to open the circuit automatically on a predetermined overcurrent without damage to itself when properly applied within its rating.

- Over 600 volts, nominal - A switching device capable of making and opening a circuit current paths under normal and abnormal circuit conditions, including short circuit conditions.

Conductor

- **Bare** - A conductor having no covering or electrical insulation whatsoever.

- **Covered** - A conductor encased within material of composition or thickness that is not recognized as electrical insulation.

- **Insulated** - A conductor encased within material of composition and thickness that is recognized as electrical insulation.

Deenergized - Free from any electrical connection to a source of potential difference and from electrical charge; not having a potential different from that of the earth.

Device - A unit of an electrical system that carries or controls electric energy as its principal function.

Disconnecting Means - A device, or group of devices, or other means by which the conductors of a circuit can be disconnected from their source of supply.

Electrical Safe Condition – Per NFPA 70E, an electrical safety condition is achieved by completing all of the following:

- Determine all sources of electrical supply (drawings, diagrams, etc.)
- Open disconnecting device for each source
- Visually verify all blades of disconnecting devices are fully open or drawout-type breakers are withdrawn
- Apply lockout/tagout devices in accordance with AUS Control of Hazardous Energy (Lockout/Tagout) Standard (ARC HSFS004)
- Test each phase conductor using adequately rated voltage detector
- Ground phase conductors where possibility exists for induced or stored energy

Electric Shock Hazard – A dangerous condition associated with the possible release of energy caused by contact or approach to energized electrical conductors or circuit parts.

Enclosed - Surrounded by a case, housing, fence or walls which will prevent persons from accidentally contacting energized parts.

Enclosure - The case or housing of apparatus, or the fence or walls surrounding an installation to prevent personnel from accidentally contacting energized parts, or to protect the equipment from physical damage.

Energized - Connected to an energy source or containing residual or stored energy.

Energized Electrical Conductors and Circuit Parts – Safe Work Condition: Energized electrical conductors and circuit parts to which an employee might be exposed shall be put into an electrically safe work condition before an employee works on or near them, unless work on energized components can be justified. Refer to LFR LO/TO Program.

Energized Electrical Conductors and Circuit Parts – Unsafe Work Condition: Only "Qualified Persons" shall be permitted to work on electrical conductors or circuit parts that have not been put into an electrically safe work condition.

Energy Isolating Device - A mechanical device that physically prevents the transmission or release of energy, including but not limited to a manually operated electrical circuit breaker, a disconnect switch, a manually operated switch by which the conductors of a circuit can be disconnected from all ungrounded supply conductors and no pole can be operated independently, a line valve, a block, and any similar device used to block or isolate energy. Push buttons, selector switches, interlocks, and other control circuit-type devices are not energy-isolating devices.

Energy Source - Any source of electrical, mechanical, hydraulic, pneumatic, chemical, thermal, or other energy source.

Equipment - A general term including material, fittings, devices, appliances, fixtures, apparatus, and the like, used as a part of, or in connection with, an electrical installation.

Exposed

- (As applied to live parts.) Capable of being inadvertently touched or approached nearer than a safe distance by a person. It is applied to electrical conductors or parts not suitably guarded, isolated, or insulated.
- (As applied to wiring methods.) On or attached to the surface or behind panels designed to allow access.

Flame-Resistant (FR) - The property of a material whereby combustion is prevented, terminated, or inhibited following the application of a flaming or non-flaming source of ignition, with or without subsequent removal of the ignition source.

Ground - A conducting connection, whether intentional or accidental, between an electrical circuit or equipment and the earth, or to some conducting body that serves in place of the earth.

Grounded - Connected to earth or to some conducting body that serves in place of the earth.

Grounded conductor - A system or circuit conductor that is intentionally grounded.

Grounding conductor - A conductor used to connect equipment or the grounded circuit of a wiring system to a grounding electrode or electrodes.

Grounding conductor, **equipment** - The conductive path installed to connect normally non-current-carrying metal parts of equipment together and to the system grounded conductor or the grounding electrode conductor, or both.

Grounding electrode conductor - The conductor used to connect the system grounded conductor or the equipment to a point on the grounding electrode or to a point on the grounding electrode system.

Ground-fault circuit-interrupter (GFCI) - A device intended for the protection of personnel that functions to deenergize a circuit or portion thereof within an established period of time when a current to ground exceeds some predetermined value that is less than that required to operate the overcurrent protective device of the supply circuit.

Guarded - Covered, shielded, fenced, enclosed, or otherwise protected by means of suitable covers, casings, barriers, rails, screens, mats, or platforms to remove the likelihood of approach or contact by persons or objects to a point of danger.

Incident Energy – The amount of energy impressed on a surface, a certain distance from the source, generated during an electrical arc event. One of the units used to measure incident energy is calories per centimeter squared (cal/cm^2).

Isolated - Not readily accessible to persons unless special means for access are used.

Labeled - Equipment or materials to which has been attached a label, symbol, or other identifying mark of an organization that is acceptable to the authority having jurisdiction and concerned with product evaluation, that maintains periodic inspection of production of labeled equipment or materials, and by whose labeling the manufacturer indicates compliance with appropriate standards or performance in a specified manner.

NFPA-70E Example Labels:

Limited Approach Boundary – An approach limit at a distance from an exposed live part, within which a shock hazard exists. Limited Approach Boundaries are based on phase-to-phase nominal voltage levels

and may be found in NFPA 70E Table 130.2(C). Unqualified Persons must maintain the Limited Approach Boundary from parts, circuits, or conductors that are exposed and energized.

Listed - Equipment, materials, or services included in a list published by an organization that is acceptable to the authority having jurisdiction and concerned with evaluation of products or services, that maintains periodic inspection of production of listed equipment or materials or periodic evaluation of services, and whose listing states that either the equipment, material, or services meets appropriate designated standards or has been tested and found suitable for a specified purpose..

Lock-out - The placement of a lock-out device on an energy isolating device, in accordance with an established procedure, ensures that the energy isolating device and the equipment being controlled cannot be operated until the lock-out device is removed.

Lock-out/Tag-out (LOTO) – The placement of a lock-out device and associated identifying tag on an energy-isolating device, in accordance with an established procedure, to ensure that this device and the equipment being controlled cannot be operated until the lock-out device and associated tag is removed.

Lock-out Device - A device that utilizes a positive means such as a lock, either key or combination type, to hold an energy isolating device in the safe position and prevent the energizing of a machine or equipment. Included are blank flanges and bolted slip blinds.

Outlet - A point on the wiring system at which current may be taken to supply utilization equipment.

Overcurrent - Any current level that is in excess of the rated current of equipment or the capacity of a conductor. It may result from overload (see definition), short circuit, or ground fault.

Overload - Operation of equipment in excess of normal, full-load rating, or of a conductor in excess of rated ampacity that, when it persists for a sufficient length of time, would cause damage or dangerous overheating. A fault, such as a short circuit or ground fault, is not an overload. Systems should incorporate suitable overload protection devices to prevent damage should such a situation occur. Fuses and circuit breakers are commonly installed for this purpose.

Other Employees - Personnel other than authorized or affected employees whose work is or may be in an area where lock-out and tag-out procedures may be used.

Personal Protective Equipment (PPE) - Rated protective equipment, including personal protective equipment for eyes, face, head, and extremities; protective clothing; respiratory devices; and protective shields and barriers. Such equipment must be provided, used, and maintained in a sanitary and reliable condition wherever necessary by reason of hazards of processes or environment, chemical hazards, electrical hazards, radiological hazards, or mechanical irritants encountered in a manner capable of causing injury or impairment in the function of any part of the body through adsorption, inhalation or physical contact.

Panel board - A single panel or group of panel units designed for assembly in the form of a single panel; including buses, automatic overcurrent devices, and with or without switches for the control of light, heat, or power circuits; designed to be placed in a cabinet or cutout box placed in or against a wall or partition and accessible only from the front.

Power outlet - An enclosed assembly that may include receptacles, circuit breakers, fuse holders, fused switches, buses and watt-hour meter mounting means; intended to supply and control power to mobile homes, recreational vehicles or boats, or to serve as a means for distributing power required to operate mobile or temporarily installed equipment.

Prohibited Approach Boundary – An approach limit at a distance from an exposed live part within which work is considered the same as making contact with the exposed live part. Prohibited Approach Boundaries may be found in NFPA 70E Table 130.2(C). Only Qualified Persons utilizing rated PPE may enter a Prohibited Approach Boundary.

Qualified Person - One who has skills and knowledge related to the construction and operation of the electrical equipment and installations and has received safety training to recognize and avoid the hazards involved.

- Whether an employee is considered to be a "qualified person" will depend upon various circumstances in the workplace. It is possible and, in fact, likely for an individual to be considered qualified" with regard to certain equipment in the workplace, but "unqualified" as to other equipment. This includes:
  - The skills and techniques necessary to distinguish exposed live parts from other parts of electric equipment.
  - The skills and techniques necessary to determine the nominal voltage of exposed live parts, and
  - Clearance distances and the corresponding voltages to which the qualified person will be exposed.
- An employee who is undergoing on-the-job training and who, in the course of such training, has demonstrated an ability to perform duties safely at his or her level of training and who is under the direct supervision of a qualified person is considered to be a qualified person for the performance of those duties.

Readily accessible - Capable of being reached quickly for operation, renewal, or inspections, without requiring those to whom ready access is requisite to climb over or remove obstacles or to resort to portable ladders, chairs, etc.

Receptacle - A receptacle is a contact device installed at an outlet for the connection of a single attachment plug. A single receptacle is a single contact device with no other contact device on the same yoke. A multiple receptacle is a single device containing two or more receptacles.

Restricted Approach Boundary – An approach limit at a distance from an exposed live part within which there is an increased risk of shock, due to electrical arc over combined with inadvertent movement, for personnel working in close proximity to the live part. Restricted Approach Boundaries may be found in NFPA 70E Table 130.2(C). Only Qualified Persons may enter into a Restricted Approach Boundary.

Service equipment - The necessary equipment, usually consisting of a circuit breaker or switch and fuses, and their accessories, located near the point of entrance of supply conductors to a building or other structure, or an otherwise defined area, and intended to constitute the main control and means of supply and cutoff of the electrical service to a premise.

Shock Hazard - A dangerous condition associated with the possible release of energy caused by contact or approach to energized electrical conductors or circuit parts.

Switchboard - A large single panel, frame, or assembly of panels that has switches, buses, instruments, overcurrent and other protective devices mounted on the face, back or both. Switchboards are generally accessible from the rear as well as from the front and are not intended to be installed in cabinets.

Servicing and/or Maintenance - Workplace activities such as constructing, installing, setting up, adjusting, inspecting, modifying, maintaining and/or servicing machines or equipment, including troubleshooting . These activities include but are not limited to lubrication, cleaning or un-jamming of machines/equipment, and making adjustments or tool changes that creates employee exposure to unplanned energizing or startup of equipment, or the release of hazardous energy.

Setting Up - Any work performed to prepare a machine or equipment for its normal production operation.

Tag-out -The placement of a tag-out device on an energy isolating device in accordance with an established procedure to ensure that the energy isolating device and the equipment being controlled cannot be operated.

Tag-out Device - A prominent warning device, including a tag and a means of attachment that can be securely fastened to an energy isolating device in accordance with an established procedure to indicate that the energy isolating device and the equipment being controlled may not be operated.

Testing – Determining that machinery, equipment, or equipment parts are de-energized through the proper application of approved test equipment designed to test for the presence or absence of voltage.

Verify - Operating equipment controls for the purpose of determining that equipment cannot be restarted after an energy-isolating procedure has been performed and before maintenance or repair work is initiated.

Voltage, nominal - A value assigned to a circuit or system for the purpose of conveniently designating its voltage class (as 120/240, 480Y/277, 600, etc.). The actual voltage at which a circuit operates can vary from the nominal within a range that permits satisfactory operation of equipment.

Voltage to ground - For grounded circuits, the voltage between the given conductor and that point or conductor of the circuit that is grounded; for ungrounded circuits, the greatest voltage between the given conductor and any other conductor of the circuit..

Exhibit 2 – Energized Electrical Work Permit

Energized Electrical Work Permit

Part 1. To be completed by the requester: Job/Work Order

Number_____

1. Description of circuit/equipment/job location:_____
2. Description of work to be done:_____
3. Justification of why the circuit/equipment cannot be de-energized or the work deferred until the next schedule outage:

_____

_____

_____ _____

Requester/Title Date

Part 2. To be completed by the electrically Qualified Persons doing the work: **Check when complete**

1. Detailed Job Description procedure to be used in performing the above detailed work:

_____

_____

2. Description of the Safe Work Practices to be employed:_____

_____

3. Results of the Shock Hazard Analysis:_____

_____

4. Determination of Shock Protection Boundaries:_____

_____

5. Results of the Flash Hazard Analysis:_____

_____

6. Determination of the Flash Protection Boundaries:_____

_____

7. Necessary personal protective equipment to safely perform the assign task:_____

_____

8. Means employed to restrict the access of unQualified Persons from the work area:_____

_____

9. Evidence of completion of a Job Briefing including discussion of any job-related hazards:_____

_____

10. Do you agree the above described work can be done safely? Yes No (if *no*, return to the requester)

Electrically Qualified Person(s) Date

Electrically Qualified Person(s) Date

Part 3: Approval(s) to perform the work while electrically energized:

Manufacturing Manager Maintenance/Engineering Manager

Safety Manager Electrically Knowledgeable Person

General Manager Date

Note: Once the work is complete, forward this form to the site Safety Department for review and retention.

Exhibit 3
Personal Protective Equipment Requirements for Work Being Done On Energized Electrical Equipment and/or In Arc Flash Boundary

	Hazard / Risk Category					
PPE	**0**	**1**	**2**	**2***	**3**	**4**
Leather gloves	As Needed❶	X❶	X❶	X❶		
Insulated rubber gloves with leather protectors	Depends on activity	Depends on activity	Depends on activity	Depends on activity	Depends on activity	Depends on activity
Arc-rated gloves					X❶	X❶
Long sleeve shirt ❷	X					
Long pants❷	X					
Arc-Rated Nomex coveralls		X (min arc rating of 4) **OR**	X (min arc rating of 8) ❸ **OR**	X (min arc rating of 8) ❸ **OR**	X to meet arc rating of 25 for total FR clothing **AND**	X (to meet min arc rating of 40) **OR**
Flame Resistant (FR)-Arc-Rated Long sleeve shirt /long pants		X (min arc rating of 4)	X (min arc rating of 8) ❸	X (min arc rating of 8) ❸	X (to meet min arc rating of 25) ❻	X (to meet min arc rating of 40)
Arc-Rated Flash suit jacket and pants					X to meet arc rating of 25 for total FR clothing	X (to meet min arc rating of 40)
Arc rated face shield		X (min arc rating of 4) **OR**	X (min arc rating of 8)❹ **OR**	X (min arc rating of 8) **OR**		
Arc rated arc flash suit hood		X	X (min arc rating of 8)	X (min arc rating of 8)	X	X (min arc rating of 40)
Safety glasses or Goggles	X	X	X	X	X ❺	X ❺
Balaclava (Sock hood)				Use with Face Shield (Category 2*)		
Hearing protection	X (inserts)	X (inserts)	X (inserts)	X (inserts)	X (inserts)	X (inserts)
Hardhat (rated for electrical)		X	X	X	X	X

	Hazard / Risk Category					
PPE	**0**	**1**	**2**	**2***	**3**	**4**
FR Hardhat Liner					X❼	X ❼
Leather boots		As Needed	X	X	X	X
Arc-rated jacket, parka, or rainwear		As Needed	As Needed	As Needed		As Needed

Notes:
If work is being done outdoors, may need arc-rated coats, rainwear, etc.;
Underlayers. Meltable fibers such as acetate, nylon, polyester, polypropylene, and spandex shall not be permitted in fabric underlayers (underwear) next to the skin.
Specific Notes:
❶Combination insulated rubber gloves with leather protectors is acceptable
❷ Non-melting (per ASTM F 1506-00) or untreated natural fiber (fabric weight at least 4.5 oz/yd^2)
❸ If using FR pants and shirts as noted, long pants of non-melting or natural fiber fabric do not need to be worn; However, if using coveralls as noted, undergarments of non-melting or untreated natural fiber **must be** worn
❹Must have wrap around guarding to protect face, forehead, ears and neck
❺Selection required. See NFPA 70E
❻Other options:

1. Two sets of Nomex coveralls (inner coverall with minimum arc rating of 4 and other one with minimum arc rating of 5) over non-melting or untreated natural fiber long sleeve shirt and pants
2. Total FR clothing system and hood with a minimum arc rating of 25

❼ As required based on activity. See NFPA 70E

Exhibit 4 - International Electrotechnical Commission 61010 Volt Meter Categories

Transient Overvoltage Category (<1,000 Volts)		
Overvoltage Category	**Brief Description**	**Examples**
CAT IV	Three phase at utility connection, any outdoor conductors	• Refers to the origin of the installation, i.e., where low-voltage connection is made to utility power. • Electric meters, primary overcurrent protective equipment • Outside and service entrance, service drop from pole to building, run between meter and panel • Overhead line to detached building, underground line to well pump
CAT III	Three phase at distribution including single-phase commercial lighting	• Equipment in fixed installations, such as switchgear and polyphase motors • Bus and feeder in industrial plants • Feeders and short branch circuits, distribution panel devices • Lighting systems in large buildings • Appliance outlets with short connections to service entrance

CAT II	Single phase receptacle connected loads	• Appliance, portable tools, and other household similar loads
		• Outlet and long branch circuits
		  o Outlets more than 10 meters (30 feet) from Cat III sources
		  o Outlets at more than 20 meters (60 feet) from Cat IV sources

CAT I	Electronics	• Protected electronic equipment • Equipment connected to (source) circuits in which measures are taken to limit transient overvoltages to an appropriate low level • Any high-voltage, low-energy source derived from a high-winding resistance transformer, such as the high-voltage section of a copier

Exhibit 5 - NFPA 70 E Table 130.2(C) Approach Boundaries to Live Parts for Shock Protection

Table 130.2(C) Approach Boundaries to Energized Electrical Conductors or Circuit Parts for Shock Protection (All dimensions are distance from energized electrical conductor or circuit part to employee.)

(1)	(2)	(3)	(4)	(5)
	Limited Approach Boundary[1]		Restricted Approach Boundary[1]; Includes Inadvertent Movement Adder	
Nominal System Voltage Range, Phase to Phase[2]	Exposed Movable Conductor[3]	Exposed Fixed Circuit Part		Prohibited Approach Boundary[1]
Less than 50	Not specified	Not specified	Not specified	Not specified
50 to 300	3.05 m (10 ft 0 in.)	1.07 m (3 ft 6 in.)	Avoid contact	Avoid contact
301 to 750	3.05 m (10 ft 0 in.)	1.07 m (3 ft 6 in.)	304.8 mm (1 ft 0 in.)	25.4 mm (0 ft 1 in.)
751 to 15 kV	3.05 m (10 ft 0 in.)	1.53 m (5 ft 0 in.)	660.4 mm (2 ft 2 in.)	177.8 mm (0 ft 7 in.)
15.1 kV to 36 kV	3.05 m (10 ft 0 in.)	1.83 m (6 ft 0 in.)	787.4 mm (2 ft 7 in.)	254 mm (0 ft 10 in.)
36.1 kV to 46 kV	3.05 m (10 ft 0 in.)	2.44 m (8 ft 0 in.)	838.2 mm (2 ft 9 in.)	431.8 mm (1 ft 5 in.)
46.1 kV to 72.5 kV	3.05 m (10 ft 0 in.)	2.44 m (8 ft 0 in.)	1.0 m (3 ft 3 in.)	660 mm (2 ft 2 in.)
72.6 kV to 121 kV	3.25 m (10 ft 8 in.)	2.44 m (8 ft 0 in.)	1.29 m (3 ft 4 in.)	838 mm (2 ft 9 in.)
138 kV to 145 kV	3.36 m (11 ft 0 in.)	3.05 m (10 ft 0 in.)	1.15 m (3 ft 10 in.)	1.02 m (3 ft 4 in.)
161 kV to 169 kV	3.56 m (11 ft 8 in.)	3.56 m (11 ft 8 in.)	1.29 m (4 ft 3 in.)	1.14 m (3 ft 9 in.)
230 kV to 242 kV	3.97 m (13 ft 0 in.)	3.97 m (13 ft 0 in.)	1.71 m (5 ft 8 in.)	1.57 m (5 ft 2 in.)
345 kV to 362 kV	4.68 m (15 ft 4 in.)	4.68 m (15 ft 4 in.)	2.77 m (9 ft 2 in.)	2.79 m (8 ft 8 in.)
500 kV to 550 kV	5.8 m (19 ft 0 in.)	5.8 m (19 ft 0 in.)	3.61 m (11 ft 10 in.)	3.54 m (11 ft 4 in.)
765 kV to 800 kV	7.24 m (23 ft 9 in.)	7.24 m (23 ft 9 in.)	4.84 m (15 ft 11 in.)	4.7 m (15 ft 5 in.)

Note: For Arc Flash Protection Boundary, see 130.3(A).

[1] See definition in Article 100 and text in 130.2(D)(2) and Annex C for elaboration.

[2] For single-phase systems, select the range that is equal to the system's maximum phase-to-ground voltage multiplied by 1.732.

[3] A condition in which the distance between the conductor and a person is not under the control of the person. The term is normally applied to overhead line conductors supported by poles.

Exhibit 6 - Hazard/Risk Category Classifications NFPA Table 130.7 (C) (9) (a)

Table 130.7(C)(9) Hazard/Risk Category Classifications and Use of Rubber Insulating Gloves and Insulated and Insulating Hand Tools

Tasks Performed on Energized Equipment	Hazard/Risk Category	Rubber Insulating Gloves	Insulated and Insulating Hand Tools
Panelboards or Other Equipment Rated 240 V and Below — Note 1			
Perform infrared thermography and other non-contact inspections outside the restricted approach boundary	0	N	N
Circuit breaker (CB) or fused switch operation with covers on	0	N	N
CB or fused switch operation with covers off	0	N	N
Work on energized electrical conductors and circuit parts, including voltage testing	1	Y	Y
Remove/install CBs or fused switches	1	Y	Y
Removal of bolted covers (to expose bare, energized electrical conductors and circuit parts)	1	N	N
Opening hinged covers (to expose bare, energized electrical conductors and circuit parts)	0	N	N
Work on energized electrical conductors and circuit parts of utilization equipment fed directly by a branch circuit of the panelboard	1	Y	Y
Panelboards or Switchboards Rated >240 V and up to 600 V (with molded case or insulated case circuit breakers) — Note 1			
Perform infrared thermography and other non-contact inspections outside the restricted approach boundary	1	N	N
CB or fused switch operation with covers on	0	N	N

Table 130.7(C)(9) *Continued*

Tasks Performed on Energized Equipment	Hazard/Risk Category	Rubber Insulating Gloves	Insulated and Insulating Hand Tools
CB or fused switch operation with covers off	1	Y	N
Work on energized electrical conductors and circuit parts, including voltage testing	2*	Y	Y
Work on energized electrical conductors and circuit parts of utilization equipment fed directly by a branch circuit of the panelboard or switchboard	2*	Y	Y
600 V Class Motor Control Centers (MCCs) — Note 2 (except as indicated)			
Perform infrared thermography and other non-contact inspections outside the restricted approach boundary	1	N	N
CB or fused switch or starter operation with enclosure doors closed	0	N	N
Reading a panel meter while operating a meter switch	0	N	N
CB or fused switch or starter operation with enclosure doors open	1	N	N
Work on energized electrical conductors and circuit parts, including voltage testing	2*	Y	Y
Work on control circuits with energized electrical conductors and circuit parts 120 V or below, exposed	0	Y	Y
Work on control circuits with energized electrical conductors and circuit parts >120 V, exposed	2*	Y	Y
Insertion or removal of individual starter "buckets" from MCC — Note 3	4	Y	N
Application of safety grounds, after voltage test	2*	Y	N
Removal of bolted covers (to expose bare, energized electrical conductors and circuit parts) — Note 3	4	N	N
Opening hinged covers (to expose bare, energized electrical conductors and circuit parts) — Note 3	1	N	N
Work on energized electrical conductors and circuit parts of utilization equipment fed directly by a branch circuit of the motor control center	2*	Y	Y
600 V Class Switchgear (with power circuit breakers or fused switches) — Note 4			
Perform infrared thermography and other non-contact inspections outside the restricted approach boundary	2	N	N
CB or fused switch operation with enclosure doors closed	0	N	N
Reading a panel meter while operating a meter switch	0	N	N
CB or fused switch operation with enclosure doors open	1	N	N
Work on energized electrical conductors and circuit parts, including voltage testing	2*	Y	Y
Work on control circuits with energized electrical conductors and circuit parts 120 V or below, exposed	0	Y	Y
Work on control circuits with energized electrical conductors and circuit parts >120 V, exposed	2*	Y	Y

(continues)

Table 130.7(C)(9) *Continued*

Tasks Performed on Energized Equipment	Hazard/Risk Category	Rubber Insulating Gloves	Insulated and Insulating Hand Tools
Insertion or removal (racking) of CBs from cubicles, doors open or closed	4	N	N
Application of safety grounds, after voltage test	2*	Y	N
Removal of bolted covers (to expose bare, energized electrical conductors and circuit parts)	4	N	N
Opening hinged covers (to expose bare, energized electrical conductors and circuit parts)	2	N	N
Other 600 V Class (277 V through 600 V, nominal) Equipment — Note 2 (except as indicated)			
Lighting or small power transformers (600 V, maximum)			
Removal of bolted covers (to expose bare, energized electrical conductors and circuit parts)	2*	N	N
Opening hinged covers (to expose bare, energized electrical conductors and circuit parts)	1	N	N
Work on energized electrical conductors and circuit parts, including voltage testing	2*	Y	Y
Application of safety grounds, after voltage test	2*	Y	N
Revenue meters (kW-hour, at primary voltage and current) Insertion or removal	2*	Y	N
Cable trough or tray cover removal or installation	1	N	N
Miscellaneous equipment cover removal or installation	1	N	N
Work on energized electrical conductors and circuit parts, including voltage testing	2*	Y	Y
Application of safety grounds, after voltage test	2*	Y	N
Insertion or removal of plug-in devices into or from busways	2*	Y	N
NEMA E2 (fused contactor) Motor Starters, 2.3 kV Through 7.2 kV			
Perform infrared thermography and other non-contact inspections outside the restricted approach boundary	3	N	N
Contactor operation with enclosure doors closed	0	N	N
Reading a panel meter while operating a meter switch	0	N	N
Contactor operation with enclosure doors open	2*	N	N
Work on energized electrical conductors and circuit parts, including voltage testing	4	Y	Y
Work on control circuits with energized electrical conductors and circuit parts 120 V or below, exposed	0	Y	Y
Work on control circuits with energized electrical conductors and circuit parts >120 V, exposed	3	Y	Y
Insertion or removal (racking) of starters from cubicles, doors open or closed	4	N	N
Application of safety grounds, after voltage test	3	Y	N

Table 130.7(C)(9) *Continued*

Tasks Performed on Energized Equipment	Hazard/Risk Category	Rubber Insulating Gloves	Insulated and Insulating Hand Tools
Removal of bolted covers (to expose bare, energized electrical conductors and circuit parts)	4	N	N
Opening hinged covers (to expose bare, energized electrical conductors and circuit parts)	3	N	N
Insertion or removal (racking) of starters from cubicles of arc-resistant construction, tested in accordance with IEEE C37.20.7, doors closed only	0	N	N
Metal Clad Switchgear, 1 kV Through 38 kV			
Perform infrared thermography and other non-contact inspections outside the restricted approach boundary	3	N	N
CB operation with enclosure doors closed	2	N	N
Reading a panel meter while operating a meter switch	0	N	N
CB operation with enclosure doors open	4	N	N
Work on energized electrical conductors and circuit parts, including voltage testing	4	Y	Y
Work on control circuits with energized electrical conductors and circuit parts 120 V or below, exposed	2	Y	Y
Work on control circuits with energized electrical conductors and circuit parts >120 V, exposed	4	Y	Y
Insertion or removal (racking) of CBs from cubicles, doors open or closed	4	N	N
Application of safety grounds, after voltage test	4	Y	N
Removal of bolted covers (to expose bare, energized electrical conductors and circuit parts)	4	N	N
Opening hinged covers (to expose bare, energized electrical conductors and circuit parts)	3	N	N
Opening voltage transformer or control power transformer compartments	4	N	N
Arc-Resistant Switchgear Type 1 or 2 (for clearing times of <0.5 sec with a perspective fault current not to exceed the arc resistant rating of the equipment)			
CB operation with enclosure door closed	0	N	N
Insertion or removal (racking) of CBs from cubicles, doors closed	0	N	N
Insertion or removal of CBs from cubicles with door open	4	N	N
Work on control circuits with energized electrical conductors and circuit parts 120 V or below, exposed	2	Y	Y
Insertion or removal (racking) of ground and test device with door closed	0	N	N
Insertion or removal (racking) of voltage transformers on or off the bus door closed	0	N	N

Table 130.7(C)(9) *Continued*

Tasks Performed on Energized Equipment	Hazard/Risk Category	Rubber Insulating Gloves	Insulated and Insulating Hand Tools
Other Equipment 1 kV Through 38 kV			
Metal-enclosed interrupter switchgear, fused or unfused			
Switch operation of arc-resistant-type construction, tested in accordance with IEEE C37.20.7, doors closed only	0	N	N
Switch operation, doors closed	2	N	N
Work on energized electrical conductors and circuit parts, including voltage testing	4	Y	Y
Removal of bolted covers (to expose bare, energized electrical conductors and circuit parts)	4	N	N
Opening hinged covers (to expose bare, energized electrical conductors and circuit parts)	3	N	N
Outdoor disconnect switch operation (hookstick operated)	3	Y	Y
Outdoor disconnect switch operation (gang-operated, from grade)	2	Y	N
Insulated cable examination, in manhole or other confined space	4	Y	N
Insulated cable examination, in open area	2	Y	N

General Notes (applicable to the entire table):

(a) Rubber insulating gloves are gloves rated for the maximum line-to-line voltage upon which work will be done.

(b) Insulated and insulating hand tools are tools rated and tested for the maximum line-to-line voltage upon which work will be done, and are manufactured and tested in accordance with ASTM F 1505, *Standard Specification for Insulated and Insulating Hand Tools.*

(c) Y = yes (required), N = no (not required).

(d) For systems rated less than 1000 volts, the fault currents and upstream protective device clearing times are based on an 18 in. working distance.

(e) For systems rated 1 kV and greater, the Hazard/Risk Categories are based on a 36 in. working distance.

(f) For equipment protected by upstream current limiting fuses with arcing fault current in their current limiting range (½ cycle fault clearing time or less), the hazard/risk category required may be reduced by one number.

Specific Notes (as referenced in the table):

1. Maximum of 25 kA short circuit current available; maximum of 0.03 sec (2 cycle) fault clearing time.
2. Maximum of 65 kA short circuit current available; maximum of 0.03 sec (2 cycle) fault clearing time.
3. Maximum of 42 kA short circuit current available; maximum of 0.33 sec (20 cycle) fault clearing time.
4. Maximum of 35 kA short circuit current available; maximum of up to 0.5 sec (30 cycle) fault clearing time.

Exhibit 7 – NFPA 70E Electrical Hazard Risk Analysis Flow Chart

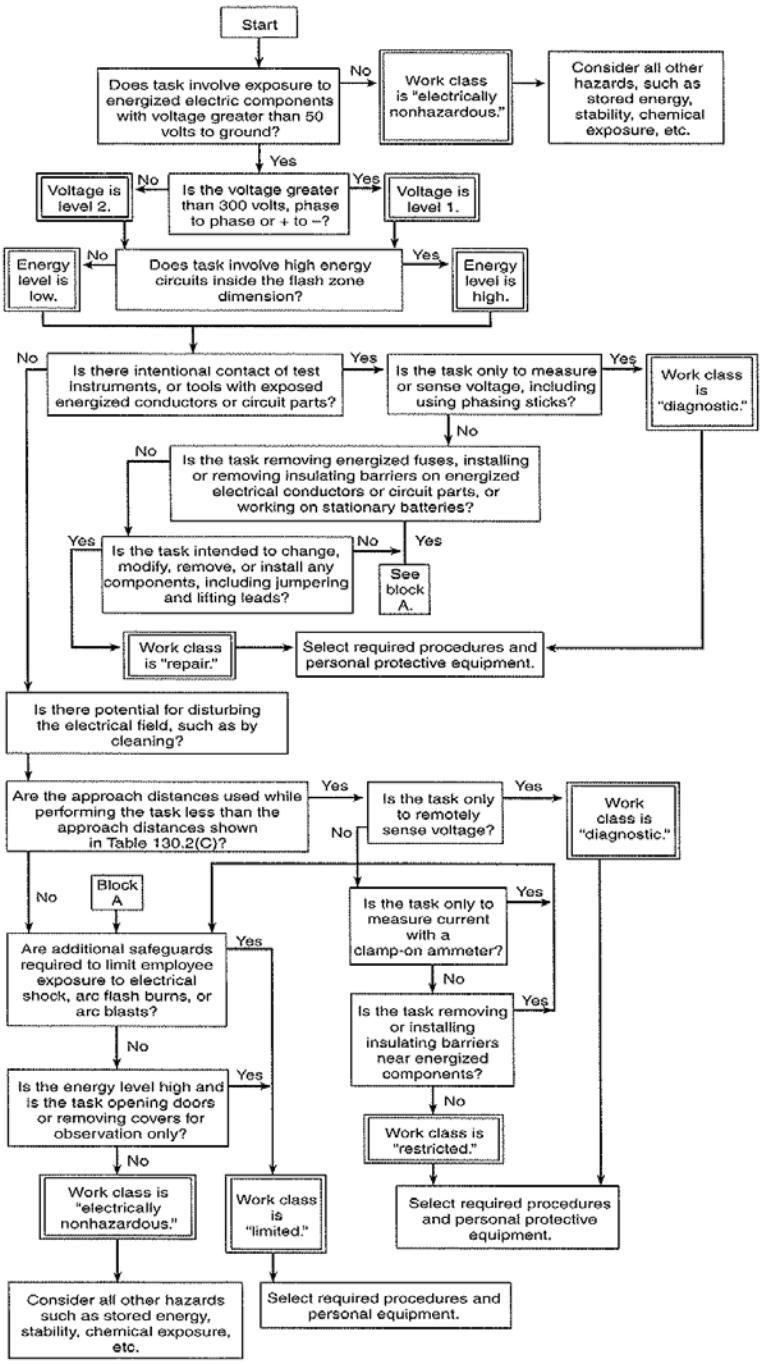

Figure F.1 Hazard/Risk Analysis Evaluation Procedure Flow Chart.

Exhibit 8 - Electrical Task Hazard Assessment Worksheet Links

Task Assessment Checklist for:

Panelboards Rated at Less Than 240 Volts - Perform Infrared Thermography and other non-contact inspections outside the restricted approach boundary

Panelboards Rated at Less Than 240 Volts - Operating a Circuit Breaker or Fused Switch with the Cover ON

Panelboards Rated at Less Than 240 Volts - Operating a Circuit Breaker or Fused Switch with the Cover OFF

Panelboards Rated at Less Than 240 Volts - Working on Energized Electrical Conductors and Circuit Parts, Including Voltage Testing

Panelboards Rated at Less Than 240 Volts - Removing/Installing Circuit Breakers or Fused Switches

Panelboards Rated at Less Than 240 Volts - Removing Bolted Covers (to Expose Bare, Energized Parts)

Panelboards Rated at Less Than 240 Volts - Opening Hinged Covers (to Expose Bare, Energized Electrical Conductors and Circuit Parts)

Panelboards Rated at Less Than 240 Volts - Working on Energized Electrical Conductors and Circuit Parts of Utilization Equipment fed directly by a Branch Circuit of the Panelboard

Panelboards or Switchboards Rated >240 Volts and up to 600 Volts (with molded case or insulated case circuit breakers) - Perform Infrared Thermography and other non-contact inspections outside the restricted approach boundary

Panelboards or Switchboards Rated >240 Volts and up to 600 Volts (with molded case or insulated case circuit breakers) - Operating a Circuit Breaker or Fused Switch with the Enclosure Cover ON

Panelboards or Switchboards Rated >240 Volts and up to 600 Volts (with molded case or insulated case circuit breakers) - Operating a Circuit Breaker or Fused Switch with the Enclosure Cover OFF

Panelboards or Switchboards Rated >240 Volts and up to 600 Volts (with molded case or insulated case circuit breakers) - Working on Energized Electrical Conductors and Circuit Parts, including Voltage Testing

Panelboards or Switchboards Rated >240 Volts and up to 600 Volts (with molded case or insulated case circuit breakers) - Working on Energized Electrical Conductors and Circuit Parts of utilization equipment fed directly by a branch circuit of the panelboard or switchboard

Common Tasks on Systems Rated 600 Volts and Below - Removing/Replacing a Light Fixture Ballast

Common Tasks on Systems Rated 600 Volts and Below - Replacing a 15 or 20-Amp Receptacle or Switch

Common Tasks on Systems Rated 600 Volts and Below - Disconnecting/Reconnecting Utilization Equipment Rated Less than 240 Volts

Common Tasks on Systems Rated 600 Volts and Below - Disconnecting/Reconnecting Utilization Equipment Rated at 240 Volts to 600 Volts

Common Tasks on Systems Rated 600 Volts and Below - Voltage Testing at Utilization Equipment Rated Less than 240 Volts

Common Tasks on Systems Rated 600 Volts and Below - Voltage Testing at Utilization Equipment Rated at 240 Volts to 600 Volts

600 Volt Class Motor Control Centers (MCCs) - Perform Infrared Thermography and other non-contact inspections outside the restricted approach boundary

600 Volt Class Motor Control Centers (MCCs) - Circuit Breaker, Fused Switch or Starter Operation with the Enclosure Doors Closed OR Reading a panel meter while operating a meter switch

600 Volt Class Motor Control Centers (MCCs) - Working on Energized Electrical Conductors and Circuit Parts, including Voltage Testing

600 Volt Class Switchgear (with power circuit breakers or fused switches) - Perform Infrared Thermography and other non-contact inspections outside the restricted approach boundary

600 Volt Class Switchgear (with power circuit breakers or fused switches) - Circuit Breaker, Fused Switch or Starter Operation with the Enclosure Doors Closed OR Reading a panel meter while operating a meter switch

600 Volt Class Switchgear (with power circuit breakers or fused switches) - Working on Energized Electrical Conductors and Circuit Parts, including Voltage Testing

EXECUTIVE SUMMARY

Through the use of personal protective equipment (PPE), ARCADIS employees are protected from occupational hazards in the event that engineering and administrative controls are not sufficient or practical. PPE will be provided to ARCADIS employees at no cost following training on the proper use and maintenance of PPE.

Project managers are responsible for assessing potential hazards on a worksite and determining the applicable PPE.

Project personnel are responsible for understanding and utilizing “Stop Work Authority” should a hazard present itself that was not previously identified or in doses higher than anticipated.

PPE selection will be based on an evaluation of the performance characteristics of the PPE relative to the following:

- The requirements and limitations of the tasks or work environment
- The task-specific conditions and duration
- The hazards and potential hazards identified at the site

PPE may be categorized into levels A, B, C or D.

- Level A offers the highest skin and respiratory protection
- Level B offers a high degree of respiratory protection with lesser levels of skin protection
- Level C is used when the concentration and type of airborne substance is known, and the criteria for using an air purifying respirator are met
- Level D offers the least skin and respiratory protection

PPE training will include, at minimum:

- When and what PPE is necessary
- How to put on, adjust, wear and take off the PPE
- Limitations of the PPE
- Proper care, maintenance, useful life, and proper disposal of PPE

1. POLICY

It is the policy of ARCADIS to assess the workplace to identify and assess hazards in order to appropriately implement controls for those hazards. In addition, it is ARCADIS policy to supply personal protective equipment (PPE) for employees in a working environment where engineering and administrative controls are not feasible or effective in the control of hazards. ARCADIS will train and supply this PPE at no cost to the employee.

2. PURPOSE AND SCOPE

2.1 Purpose

The purpose of PPE is to shield or isolate individuals from the chemical, physical and biologic hazards that may be encountered in their work environment. A hazard analysis or assessment will be performed before a job task is begun to evaluate if PPE is necessary to protect an employee from identified hazards and determine the type of PPE required. This analysis will include the identification of hazards/suspected hazards and their routes of exposure.

Combinations of protection may be needed to provide the appropriate level of protection for any given work environment. The level of PPE may change during a job, so periodic evaluation will be done to ensure that the most appropriate PPE is being used. Over-protection, as well as under-protection, can be hazardous and should be avoided where possible.

Subcontractors and other non-ARCADIS employees must supply their own PPE. ARCADIS will not supply PPE to any non-ARCADIS employees unless specific arrangements and agreements are made with the other party.

This Health and Safety Standard (HSS) provides guidance on the proper selection, use, care and maintenance of PPE.

2.2 Scope

Whenever possible, engineering, substitution and administrative controls will be used to reduce or eliminate hazards, but when they are not feasible, practical or adequate, PPE will be used to protect employees from exposure to hazards during ARCADIS-related work tasks.

3. DEFINITIONS

Definitions related to personal protective equipment can be found in Exhibit 1.

4. RESPONSIBILITIES

4.1 ARCADIS Management

Responsible for providing resources for the acquisition of PPE and for the conduct of hazard assessments.

4.2 Project Managers

Project Managers are responsible, as part of the project hazard assessment, for determining PPE necessary to complete the project. In addition, the Project Manager is responsible for determining client requirements with respect to PPE. Project Managers notify health and safety staff of biological, chemical and physical hazards present or potentially present on the site. Project Managers are also responsible for ensuring that project staff has the appropriate and applicable training for PPE use prior to those staff beginning work.

4.3 Corporate Health and Safety

Corporate Health and Safety is responsible for keeping this standard up-to-date with current regulatory requirements and best practices and for assisting in determining the appropriate PPE for a particular task and work environment and for assisting in the identification of appropriate vendors of such PPE.

4.4 Health and Safety Staff

Project Health and Safety Staff including designated Writers and Reviewers of Project Health and Safety Plans (HASPs) are responsible for developing control processes and techniques on specific projects based on the physical, chemical and biological hazards expected to be encountered on project facilities.

4.5 ARCADIS Staff

ARCADIS staff is responsible for completing PPE training as required by this policy and standard, and for following all hazard control processes designated by the Project Manager, Project Health and Safety Staff and the project HASP. If project personnel believe that a hazard is present that was not previously identified or is at levels that are higher than expected, they should stop work and notify project health and safety staff or the project manager immediately and not proceed until authorized.

5. PROCEDURE

5.1 Minimum PPE Requirements

All staff that regularly conduct field work or visit project sites outside of office environments will be issued a field bag that contains, at a minimum, the following PPE:

- An ARCADIS logo'd hardhat

- Two pair of safety glasses, one clear pair and one tinted pair, or one pair of prescription safety glasses with transitional lenses
- Hearing protection
- A minimum, Type 2 reflective vest in either orange, lime green or yellow
- Steel toe safety boots

Office locations will stock extra bags with the equipment listed above for use by other staff that do not regularly go to field locations. Additional PPE and H&S equipment will be issued to staff based on the hazards they face on specific projects (i.e. respirators, goggles, chaps, etc.).

No ARCADIS staff should arrive at a field or project site without this minimum PPE.

5.2 The PPE Program

The basic objectives of a PPE program are to protect the wearer from safety and health hazards; and to prevent injury to the wearer from incorrect use and/or malfunction of the PPE. This document serves as the overall ARCADIS PPE program and is used as guidance for the development of a project-specific PPE program which becomes part of a project-specific health and safety plan. A project-specific PPE program in combination with this HSS will address the following:

- PPE selection based upon site hazards (Hazard Identification/Assessment).
    - Identify the hazards/suspected hazards and their potential routes of exposure (e.g., skin, inhalation, ingestion or eye contact).
- The use and limitations of the equipment including limitations during temperature extremes and under certain medical conditions;
- The work mission duration;
- Maintenance, storage, decontamination and disposal of PPE;
- Training including proper fit and how to properly put on and take off PPE;
- PPE inspection procedures prior to, during, and after use; and
- Periodic evaluation of the effectiveness of the PPE program.

5.3 PPE Selection

The use of PPE can itself create significant worker hazards, such as heat stress, physical and psychological stress and impaired vision, mobility and communication. Over-protection, as well as under-protection, can be hazardous and should be avoided where

possible. Site or project-specific health and safety plans take into consideration engineering, substitution, and administrative controls first as a means to eliminate/reduce the need for PPE. When it is not feasible or practical to eliminate the use of PPE, PPE selection will be based on an evaluation of the performance characteristics of the PPE relative to the following:

- The requirements and limitations of the tasks or work environment;
- The task-specific conditions and duration; and
- The hazards and potential hazards identified at the site.

The level of protection will be increased whenever it is shown that increased protection is necessary to reduce employee exposures to the hazards. It may be decreased when it is shown that this will not result in hazardous exposure to employees.

5.4 Levels of PPE Protection

For work on hazardous sites, a combination of PPE may be categorized into levels A, B, C, or D with level A offering the highest level of protection and D the lowest. Monitoring the effectiveness of PPE will be done throughout a project to ensure that the appropriate level of protection is being worn. These levels of protection are described below.

5.4.1 Level A Protection

Level A PPE offers the highest level of respiratory and skin protection and should be worn when:

- The hazardous substance has been identified and requires the highest level of protection of the skin, eyes, and respiratory system based on either:
  - The measured (or potential) high concentrations of atmospheric gases, vapors, or particulates; or
  - If site operations and work functions involve a high potential for splash, immersion, or exposure to unexpected vapors, gases, or particulates which are harmful to skin eyes, or the respiratory system.
- There is a known or suspected high degree of hazard to the skin and skin contact is possible.
- Conducting work in a confined, poorly ventilated area and the other criteria requiring Level A PPE have not been determined.

Level A equipment includes:

- NIOSH approved positive pressure, full-face piece self contained breathing apparatus (SCBA), or positive pressure supplied airline respirator with escape SCBA;

- Totally encapsulating chemical-protective suit (material based on the hazard);
- Chemical resistant outer **and** inner gloves (type and material based on the hazard);
- Chemical resistant boots with steel toe and shank;
- Disposable protective suit, gloves and boots (depending on suit construction, may be worn over the totally encapsulating suit);
- Coveralls (optional, as applicable);
- Long underwear (optional, as applicable); and
- Hard-hat - under suit (optional, as applicable).

5.4.2 Level B Protection

Level B PPE offers a high degree of respiratory protection with lesser levels of skin protection. Level B PPE should be worn when:

- The type and atmospheric concentration of substances have been identified and require a high level of respiratory protection but less skin protection;
- The atmosphere contains less than 19.5 percent oxygen; or
- The presence of incompletely identified vapors or gases is indicated by direct reading organic vapor detection instruments, but the vapors and gases are not suspected of containing high levels of chemical harmful to the skin or capable of being absorbed through the skin. Level B is the minimum level of protection that should be worn when there is insufficient information to determine the hazards or potential hazards of the substance.

Level B PPE equipment includes:

- NIOSH approved positive pressure, full face piece self contained breathing apparatus 1(SCBA), or positive pressure supplied air respirator with escape SCBA;
- Hooded chemical resistant clothing (overalls and long sleeve jacket; coveralls; one or two piece chemical splash suit; disposable chemical resistant overalls) (materials based on the hazards);
- Chemical resistant outer **and** inner gloves (material based on the hazards);
- Chemical resistant boots with steel toe and shank;
- Coveralls (optional, as applicable);

- Outer chemical resistant boot covers (optional, as applicable);
- Hard hat (optional, as applicable); and
- Face shield (optional as applicable).

5.4.3 Level C Protection

Level C PPE is used when the concentration and type of airborne substance is known, and the criteria for using an air purifying respirator are met. It should be worn when:

- Atmospheric contaminants, liquid splashes, or other direct contact will not adversely affect or be absorbed through any exposed skin;
- The types of air contaminants have been identified, concentrations measured, and an air purifying respirator is available that can remove the contaminants; and
- All criteria for the use of an air purifying respirator are met.

Level C PPE equipment includes:

- NIOSH approved full face or half mask air purifying respirator (with appropriate cartridges based on the hazards);
- Hooded chemical resistant clothing (overalls and long sleeve jacket; coveralls; one or two piece chemical splash suit; disposable chemical resistant overalls) (materials based on the hazards);
- Chemical resistant outer **and** inner gloves (materials based on the hazards);
- Chemical resistant boots with steel toe and shank;
- Coveralls (optional, as applicable);
- Outer chemical resistant boot covers (optional, as applicable);
- Hard hat (optional, as applicable);
- Escape mask (optional, as applicable); and
- Face shield (optional, as applicable).

5.4.4 Level D Protection

Level D PPE offers the least skin and respiratory protection and should be worn when the atmosphere contains no known hazards, and work functions preclude splashes,

immersions or the potential for unexpected inhalation of or contact with hazardous levels of any chemicals.

Level D PPE equipment may include any or all of the following depending on the hazards of the site:

- Chemical resistant boots with steel toe and shank (optional, as applicable);
- Coveralls (optional, as applicable);
- Gloves (optional, as applicable);
- Outer chemical resistant boots (disposable) (optional, as applicable);
- Safety glasses or chemical splash goggles (optional, as applicable);
- Hard hat (optional, as applicable);
- Escape mask (optional as applicable); and
- Face shield (optional as applicable).

5.5 Combinations of Protection

Combinations of protection are acceptable if the task hazard analysis and the site conditions warrant modification of PPE levels.

5.6 Equipment List

5.6.1 Eye/Face Protection

All employees engaged in or working in or adjacent to areas with eye-hazardous activities or operations, such as but not limited to flying objects and hazardous chemicals shall wear appropriate eye protection.

- Safety glasses with side shields are required for impact protection and shall meet ANSI Standard Z87.1 requirements.
- Chemical goggles (for protection against chemical splash).
- Face shields (for face protection from chemical splash and are not a substitute for primary eye protection).
- Full-face respirators can provide eye and face protection in lieu of safety glasses, goggles or face shields.

- Shaded eye protection meeting the minimum shade requirements established in 29 CFR 1910.133 (for employees exposed to sources of injurious light radiation [e.g., welding, cutting, lasers]).

- For prescription eye protection contact your supervisor to fill out an AOSafety order form available on APEX.

5.6.2 Respiratory Protection

Respirators will be provided and used in accordance with the ARCADIS Respiratory Protection Policy/Standard ARC HSGE017 and 29CFR 1910.134.

5.6.3 Hearing Protection

Hearing protection will be provided and used in accordance with the ARCADIS Hearing Conservation Policy/Standard ARC HSIH008 and 29CFR 1910.95.

5.6.4 Foot Protection

- Basic foot protection is required for all ARCADIS job sites and industrial locations. Specialized footwear will be provided as required by the nature of the work. Special foot protection may include, but is not limited to, chemically resistant, thermally shielded, metatarsal guards, etc.

- Leather Safety Boots will be provided for employees; one pair of leather safety boots will be provided as necessary by ARCADIS. The employee purchasing the footwear is required to ensure that it meets any of the consensus standards as specified by OSHA 29 CFR 1910.136 which include:

  - ASTM F-2412-2005, "Standard Test Methods for Foot Protection," and ASTM F-2413-2005, "Standard Specification for Performance Requirements for Protective Footwear"

  - ANSI Z41-1999, "American National Standard for Personal Protection -- Protective Footwear"

  - ANSI Z41-1991, "American National Standard for Personal Protection -- Protective Footwear"

  - All consensus standards are incorporated by reference in OSHA 29CFR 1910.6

- In general, for most work done by ARCADIS, safety boots must be equipped with steel toes. Puncture resistant soles or in-soles equipped in the safety boots are project driven based on the Hazard Assessment. Some clients may require puncture resistant soles or in-soles.

- The maximum expenditure or reimbursement for approved safety shoe purchases will be $150. Reimbursement requests must be approved by the employee's supervisor.

- Athletic-style safety shoes ("safety sneakers") are prohibited (due to the difficulties created by these styles in supervising proper use of protective footwear).

5.6.5 Head Protection

Hard hats meeting ANSI Z89.1 will be provided to protect employees from impact, penetration, falling objects and/or limited electrical shock and burn, as appropriate for work site hazards. A hard hat must be replaced when it becomes damaged, contaminated (and contamination cannot be removed) or it has been struck by an object of sufficient size to potentially compromise its integrity.

Hardhats must resist penetration by objects, be water resistant and slow burning, and have a chin strap if it is worn while working at elevation. It must be worn square on the head and not be pushed back, to the side or forward.

There are two types and three classes of head protection described in ANSI standard.

Other hazard situations to consider are:

- In areas of heavy vegetation or in any area where hunters may be present, it is recommended that some type of brightly colored head protection be worn. For example, a bright orange or yellow baseball cap or stocking cap.

- If cold exposure is an issue, hardhat liners are available (made specifically for the particular hardhat) or if a hardhat is not required, some type of insulated head protection such as a stocking cap should be worn.

5.6.6 Hand Protection

Appropriate hand protection will be provided if employee's hands are exposed to hazards while on the job.

Such as:

- pinch points

- sharp/pointed tools or objects

- incorrect or inadequate tool use

- improper use

- rotating/energized/automated parts

- abrasive materials

- inadequate job planning

- lack of/inadequate protection

- changing weather conditions and extreme temperatures
- hazardous material
- jewelry and loose clothing.

Once these hazards are identified, the appropriate glove or hand protection must be selected. When choosing gloves, keep in mind:

- Hazardous Chemicals/Substances to be Contacted
- Nature of Contact (total immersion, splash, etc.)
- Duration of Contact
- Area of Protection (hand only, forearm, arm)
- Equipment (rotating, sharp edges, etc.)
- Grip (dry, wet, oily)
- Thermal Protection
- Abrasion/Cut/Puncture Resistance
- Tear/Tensile Strength
- Ergonomics (size, heat stress, dexterity)
- Decontamination/Disposal

In selecting chemically protective gloves, the toxic properties of the chemical(s) will be determined. Information provided on the manufacturer's label or by chemical compatibility charts regarding breakthrough time, permeation rate and degradation should be considered during selection.

5.6.7 Body Protection

Protective clothing, gloves, boots, and other protective equipment will be provided as appropriate for the hazards associated with the tasks being performed.

Long pants are required for all field work unless approval is granted by corporate H&S. Additional protection such as cooling vests may be required. In environments with potential biological hazards such as ticks, plants or snakes, gloves and long sleeves should be worn along with head protection of some kind to protect the scalp. In areas of roadway work or other vehicle traffic high visibility Class II safety vests will be worn.

Chemically Protective Clothing (CPC) will be selected by evaluating the performance characteristics of the CPC against the requirements and limitations of the site and task-

specific conditions. This selection should be performed by an employee with training and experience taking into consideration:

- Permeation, degradation, penetration of the CPC by the chemical and;
- Durability, flexibility, fit, temperature effects, ease of decontamination, compatibility with other necessary equipment (e.g., hardhats, SCBA, etc.); and duration of use that could affect the employees ability perform the task.

Where required, appropriate Fire Resistant (FR) protective clothing must be used where there is a potential for electrical arc flash hazards (refer to the ARCADIS Electrical Safety Standard HSFS006 for additional information). Jobs that expose workers to fire dangers require the use of FR protective clothing.

5.6.8 Specialized Equipment

All other specialized safety equipment required for an assignment (e.g., work gloves, specialized protective clothing, hip boots, field rain gear, personal floatation devices) will be provided by ARCADIS as specified in the HASP.

5.6.9 Extreme Cold Environments

Supervisors are responsible for ensuring that staff is properly equipped to protect themselves while working in extreme cold environments. The following is suggested as appropriate PPE for cold conditions:

- Hats/hat liners and gloves
- Thermal clothing
- Hi-Visibility clothing
- Winter footwear

Use of specialized equipment will be charged to projects in accordance with established policy and rental rates.

5.7 Maintenance/Storage/Disposal

5.7.1 PPE Maintenance and Disposal

PPE must be inspected by the user before and after each use for defects, rips, tears and/or damaged parts. Damaged or compromised PPE will not be used and must be repaired before re-use or disposed. PPE must be disposed of according to the HASP and other project plans for the site. If non-disposable, PPE must be decontaminated and sanitized before being reused according to the HASP Contaminated PPE which cannot be properly decontaminated by normal procedures must be disposed of accordingly.

5.7.2 PPE Storage

All PPE must be stored to protect against dust, sunlight, extreme heat and cold, excessive moisture and damaging chemicals. Storage must be in accordance with the manufacturer's specifications and OSHA requirements.

5.7.3 Contaminated Boots

Single-use boots or boot covers which become contaminated on the job will be waste profiled, as necessary, and properly disposed. Work boots will be properly decontaminated upon exiting contaminated work zones (exclusion zones). Work boots that are damaged on the job must be replaced.

6. TRAINING

Training in the proper use of PPE will generally be provided in conjunction with HAZWOPER training or via coursework selected and approved by Corporate H&S. Training will be completed prior to the employee's use of PPE, when changes in the work place alter the use or type of PPE, and when inadequacies in the employee's knowledge or use of PPE are noted.

The training will include at a minimum:

- When and what PPE is necessary;
- How to put on, adjust, wear and take off the PPE;
- Limitations of the PPE; and
- Proper care, maintenance, useful life, and proper disposal of PPE.

7. REFERENCES (regulation citation, technical links, publications, etc.)

29 CFR 1910.120 "Hazardous Waste Operations and Emergency Response"

29 CFR 1910 Subpart I "Personal Protective Equipment"

29 CFR 1910.136 Foot Protection

29 CFR 1910.6 Incorporation by reference

8. RECORDS - DATA RECORDING AND MANAGEMENT

Records of the PPE training are retained by the employee and in the ARCADIS training database. Medical clearance for respirator use is maintained by the employee and ARCADIS' medical vendor.

9. APPROVALS AND HISTORY OF CHANGE

Approved by: Mija Coppola, Corporate Health and Safety Director

History of Change

Revision Date	Revision Number	Reason for change
20 February 2009	01	Original document
19 August 2011	02	Updated footwear protection consensus standards, clarified contaminated work boot section and updated document format

Exhibit 1 – Definitions

Eye/Face Protection - Equipment designed to provide eye or face protection when exposed to hazards from flying particles, molten metal, liquid chemicals, acids or caustic liquids, chemical gases or vapors, or potentially injurious light radiation.

Foot Protection - Footwear designed to provide foot and toe protection when working in areas where there is a danger of foot injuries due to falling or rolling objects, or objects piercing the sole, and/or where an employee's feet are exposed to electrical hazards. These include such measures as steel toe and boot warmers.

Hand and Body Protection - Equipment designed to provide protection to the hands and body during exposures to potential hazards such as potential for skin absorption of harmful substances, sharp objects, abrasive surfaces, punctures, temperature extremes and chemical contact.

Hazard Assessment - The process utilized to identify hazards in the workplace and to select the appropriate PPE to guard people against potential hazards.

Head Protection - Equipment designed to provide protection to the head during exposure to potential hazards such as falling objects, striking against objects or electrical hazards.

Hearing Protection - Equipment designed to provide protection to an individual's hearing during exposure to excessive noise levels and any 8hr work day with noise levels consistently 85dB or above.

Personal Protective Equipment (PPE) - Equipment designed to provide protection to the wearer from potential hazards to the eyes, face, hands, head, feet, ears, extremities and respiratory system.

Respiratory Protection - Equipment designed to provide protection to the wearer from potential inhalation hazards such as vapors, mists, particulates and gases.

1. POLICY

It is the policy of ARCADIS to comply with OSHA's Medical Services and First Aid Standard as it relates to the work we do. According to OSHA, the employer will ensure the "ready availability of medical personnel", but how this is implemented is dependent on the circumstances of each place of work.

2. PURPOSE AND SCOPE

2.1 Purpose

This policy and standard assists ARCADIS employees in determining if the OSHA standard applies to their project sites, and assists in evaluating appropriate training needs for employees.

2.2 Scope

The Medical Services and First Aid standard applies to all ARCADIS offices that designate or expect employee(s) to act as First Aid Responders at the office location and/or a job site. Employees who are not designated or expected to act as a First Aid Responder may render first aid voluntarily if they are trained in first aid, but their actions are not covered under the OSHA standard.

If the office or job site is in near proximity to medical services, employees do not need to be designated or expect to act as First Aid Responders unless required to do so by a particular OSHA standard or client requirement. However, if the office or job site is not in near proximity to medical services, an employee or employees will be designated and trained to render first aid.

3. DEFINITIONS

3.1 **Near Proximity –** The ability to respond and start to administer first aid within 3 to 4 minutes.

3.2 **First Aid Responder –** An employee designated by ARCADIS to receive First Aid/CPR training so that he/she can respond to emergency situations and administer First Aid/CPR until medical attention can be administered by medical professionals.

3.3 **HSS –** Health & Safety Standard

4. RESPONSIBILITIES

4.1 **Principal in Charge (PIC) and Project Manager (PM) –** Determines if a First Aid Responder is required for their project site. Ensures that employees working on their project sites have the proper training as required by this policy and standard.

4.2 Location Leader and Office H&S Coordinator – Determines if a First Aid Responder is required for their office location. Ensures that employees working in those locations have the proper training as required by this policy and standard.

4.3 Employees – If designated as a First Aid Responder, ensures that training is up to date as required by this policy and standard.

5. PROCEDURE

5.1 Designation of First Aid Responders

The PIC, PM, Location Leader, and/or Office H&S Coordinator determines if they are required to designate First Aid Responders at the office location and/or at any particular job site. The types of accidents/injuries that could occur, location/availability of medical facilities, and the response time of emergency services are considered in making this determination.

In the absence of an infirmary, clinic or hospital in near proximity to the workplace, an employee(s) will be trained to render First Aid/CPR. This may also be necessary if required to do so by another standard (i.e. more stringent State standard) or a client. First aid supplies are readily available if an employee is designated as a First Aid Responder.

If the office and/or job site is in near proximity of emergency medical services (within 3-5 minutes of medical care), and if not required to do so by some other standard or client, there is no requirement to designate First Aid Responders. However, if the decision is made to designate First Aid Responders, all requirements of this HSP apply.

This HSP does not apply to employees who voluntarily obtain First Aid/CPR certification for their own personal benefit, and were not designated by ARCADIS as a First Aid Responder.

5.2 First Aid Supplies/Kits

Employees designated or expected to act as First Aid Responders have first aid supplies readily available. The type of work being done, worksite and office sites are considered when determining the contents of a first aid kit. If exposure to the weather is possible, the contents of the first aid kit are protected.

The OSHA standard does not specify what should be in a kit, but does reference the recommendations by ANSI in their Z308.1-1998 publication, “Minimum Requirements for Workplace First Aid Kits” which provides types of kits and basic and optional contents. The contents of a basic first aid kit are provided in Exhibit 1.

The first aid kit will also contain appropriate PPE and waste disposal supplies as required in OSHA’s Bloodborne Pathogens standard described in the ARCADIS Bloodborne Pathogen HSP (ARC HSGE005). First aid kits will not contain medications that have potential to cause drowsiness or contain prescription medications.

Some sort of routine inventory is done on all first aid kits. For job site first aid kits, the inventory is checked when it is initially taken to the job site, weekly thereafter, and anytime first aid is rendered. For office first aid kits, the inventory is checked monthly and anytime first aid is rendered. An example of an inventory form is included in Exhibit 2.

5.3 Emergency Eye Wash and Body Wash Equipment

Where the eyes or body of an employee may be exposed to injurious corrosive materials, suitable facilities for emergency drenching/flushing of the eyes and body is provided within the “immediate” work area.

6. TRAINING

First Aid/CPR training occurs prior to assignment as a First Aid Responder. Training is certified by the American Heart Association (AHA). Exceptions to using the AHA need to be approved by the Health & Safety Department before proceeding with training through another vendor.

In accordance with AHA guidelines, CPR certification is provided on a bi-annual (every two years) basis. Due to the importance of First Aid training, certification is required bi-annually at the same time as the CPR certification. Bloodborne pathogen training is required annually per OSHA’s Bloodborne Pathogens standard described in ARCADIS Bloodborne Pathogen HSP (ARC HSIH005).

7. REFERENCES

CFR 1910.151, “Medical Surveillance and First Aid”

CFR 1926.50, “Medical Services and First Aid”

OSHA Technical Links, “Medical and First Aid”

OSHA September 2, 1993 Compliance Letter, “Definitions for ‘near proximity’ and ‘serious injury’”

ANSI Z308.1-1998 publication, “Minimum Requirements for Workplace First Aid Kits”

8. RECORDS

Upon completion of the AHA First Aid/CPR course, certification cards are issued. Copies of the certification cards are sent to the Area Administrator and ARCADIS Training Department.

9. APPROVALS AND HISTORY OF CHANGE

Approved By: Pat Vollertsen, Director of H&S Training and Administration

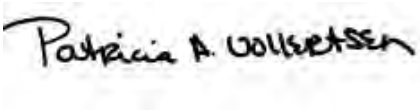

History of Change

Revision Date	Revision Number	Reason for change
10 January 2008	01	Original document
28 April 2010	02	Add clarification of “near proximity” in section 5.1

Exhibit 1 – Basic First Aid Kit Contents

(ANSI Publication Z308.1-1998 and ARCADIS Best Practice*)

Item and Minimum Size or Volume	Minimum Quantity
Absorbent Compress, 32 sq. inches with no side smaller than 4 inches. (81.3 sq. cm. with no side smaller than 10 cm)	1 (sealed and sterile)
Adhesive Bandages, 1x3 inches 2.5x7.5 cm)	16 (sterile & individually packaged)
Adhesive Tape, 5 yards total (457.2 cm)	1
Antiseptic application, 0.5g (0.14 fl. oz.)	10 (individual use packets)
Burn Treatment, 0.5g (0.14 fl. oz.)	6 (individual use packets)
Medical Exam Disposable Gloves	2 pair
Sterile pad, 3x3 inches (7.5x7.5 cm)	4 (individually packaged pads)
Triangular Bandage, 40x40x56 inches (101x101x142 cm)	1
* Mouth Guard (to be used if giving mouth-to-mouth resuscitation)	1 (individually packaged)

Exhibit 2 – Sample First Aid Kit Inspection Form

MONTHLY CHECK OF FIRST AID CABINET

If any items appear missing, **(responsible ARCADIS party name or vendor name)** will be contacted that same day so that replacement supplies can be ordered. **(responsible ARCADIS party name vendor name)** will also inspect, replace and remove and replace out-dated items every **(#)** days.

Year _____

Date Checked	Checked By	Date Checked	Checked By

Checked by:

1.

2.

3.

Replacement: Place an asterisk (*) beside the date a missing item(s) was noted and when the vendor was called; note below when replacement was delivered. Include any other pertinent comments.

_____

_____

_____

_____

1. POLICY

It is ARCADIS policy to inform all employees of the hazardous chemicals they may encounter during their work activities. This shall be accomplished through the development and implementation of a location and project specific hazard communication process that includes Material Safety Data Sheets (MSDS), container labeling, and training. Hazard Communication (HazCom) requires a written program specific to each location or job site where hazardous chemicals/products are used or stored. The principal goal of the written program is to inform employees, contractors, and subcontractors about potential hazards associated with routinely used chemicals/products. A checklist that will assist in evaluating conformance with this procedure is found in Exhibit 1.

2. PURPOSE AND SCOPE

2.1 Purpose

The purpose of this Health and Safety Procedure (HSP) is to provide direction on the development and implementation of a office location or project specific HazCom program. Each office or job site that is subject to the HazCom standard shall have a written program regarding chemical use and storage. The program should describe how the requirements of the standard will be met. The program should address the following:

- Master Inventory List (MIL),
- Material Data Safety Sheets (MSDSs), and
- Labeling system and requirements.
- Training

2.2 Scope

This HazCom HSP applies to all office locations and job sites that store or use hazardous chemicals/products on site (office or field). Use of a hazardous chemical includes generation of that chemical as a byproduct. It covers the requirements of both the US OSHA and State, and Federal Canadian and Provincial standards.

3. DEFINITIONS

Workplace includes any office or job site where hazardous chemicals/products are stored or used.

Use of a chemical means to package, handle, react, emit, extract, generate as a byproduct, or transfer.

4. RESPONSIBILITIES

Corporate H&S Staff - assist the locations and project sites with the development and implementation of the required HazCom program. In addition, provide the tools and resources for employees to have access to information on hazardous chemicals.

Location Leaders and H&S Coordinators – are responsible for the development and implementation of a HazCom program in their location.

Employees – are responsible for reviewing MSDS of the substances they are going to work with and make sure they understand all relevant information as well as take necessary precautions. They are responsible for ensuring that containers of hazardous chemicals they are using are appropriately labeled and if not, for obtaining the proper labeling.

Managers and Supervisors – are responsible for providing the necessary resources for the appropriate development and implementation of an appropriate HazCom program.

Project Managers and Principals in Charge (PICs) – are responsible for ensuring that a HazCom program is developed and implemented on projects where hazardous chemicals are utilized or encountered. PMs and PICs are also responsible for understanding their clients' requirements for HazCom and that hazardous chemical information is shared with the client. In addition, PICs and PMs are responsible for ensuring their project staff has had training in HazCom per this HSP.

Site Safety Officers (SSOs) – will act as the HazCom Program Coordinator for the project sites and shall maintain the Master Inventory List (MIL) of hazardous chemicals kept on the job Site. The SSO is responsible for maintaining MSDS on Site for all chemicals. The SSO is responsible to communicate the location of the MSDS and the hazards associated with these chemicals to all project Site ARCADIS employees and subcontractors during the safety orientation. The SSO shall ensure that all containers of chemicals (including drums, bags, pails, tanks, vessels, etc.) are labeled appropriately.

5. PROCEDURE

5.1 Written Program

Every office within ARCADIS shall develop and maintain a written HazCom program specific to their location and activities. The program should be developed using the template provided in Exhibit 2 of this procedure. The program shall be reviewed annually. The written program shall be maintained in a location that is accessible to each employee when they are in the office. Employees shall be notified of its presence and how to access it.

For project sites, the project H&S plan (HASP) shall serve as the documented written HazCom program for that site. The HASP shall provide information about the chemicals present on the site (inventory), the location of the MSDS on site, and the labeling of containers. In addition, the required training shall be part of the site orientation and the daily or more frequent tailgate meetings at the project site.

5.2 Master Inventory List (MIL)

A MIL is an inventory of all chemicals/products found on-site. At each location or project site, an inventory of the hazardous chemicals present shall be completed at least once per year, or as new chemicals are introduced to or removed from the location and more often as necessary. This inventory shall be developed into a MIL of hazardous chemicals. This inventory includes hazardous chemicals present in piping and those that may be generated as a byproduct of other activities.

Upon completion of the inventory, it shall be determined if any of the chemicals/products identified are exempt from the appropriate HazCom standard that is applicable to the location. If the chemicals/products at the location are exempt from HazCom, it shall be noted on the MIL. The MIL shall be made available to all employees and should be kept current and accurate. The MIL for a project will be found in the HASP. A sample MIL form for office use is found in Exhibit 3.

Common chemical exemptions include:

1. Foods, drugs, or cosmetics intended for personal consumption by employees;

2. Any consumer product or hazardous substance used in the workplace in the same manner as normal consumer use, and which use results in a duration and frequency of exposure which is not greater than exposures experienced by consumers; and

3. Office products to which office workers would have non-route exposure.

Exhibit 4 provides a listing of those chemicals which are commonly determined to be exempt in ARCADIS offices. However, each office and project site must determine what is exempt by using the exemption descriptions above.

The MIL shall be reviewed periodically. Any new chemicals/products will be added and those no longer in use or kept at the office or job site shall be deleted.

5.3 Labeling

All primary and secondary containers of hazardous chemicals/products listed on the MIL must be labeled. Labels or other forms of warning will be legible, in English, and prominently displayed on the container, or readily available in the work area. For employees who speak another language(s), information may be added in their language to the label or other form of warning. At a minimum, label information shall include:

- Proper chemical name,
- Appropriate hazard warnings (words, pictures, or symbols that illustrate the hazards of the chemical/product), and
- Name and address of the manufacturer/importer.

Manufacturer labels are acceptable as long as they meet these HAZCOM criteria. Any chemicals/products that do not meet the basic label requirements must not be used or purchased. Employees shall not use chemicals/products in unlabeled containers, and if the chemical/product is transferred to a temporary container, the temporary container must also have a proper label. Periodic inspections, which can be done in association with the periodic MIL review, shall be performed to ensure that all containers are appropriately labeled.

Exhibit 5 presents the most common labels used by manufacturers and Exhibit 4 is a description of the NFPA (National Fire Protection Association) chemical hazard label. These labels are available through the H&S vendor used by the company.

5.4 Material Safety Data Sheets (MSDSs)

A Material Safety Data Sheet shall be obtained and then maintained for each chemical subject to the HAZCOM standard. It shall be readily available to all employees who may utilize or be exposed to the applicable chemicals. The MSDS is the principal means of conveying chemical-specific information to the user. MSDS's must be present for each chemical used in the field.

MSDS for those hazardous substances purchased or obtained by ARCADIS or are in their original container from the manufacturer or have been transferred from their original container to a secondary container, shall be those specific MSDS developed and provided by the manufacturer for that specific substance. **(Manufacturer MSDS often are found on the manufacturer's website)** MSDS for hazardous substances identified in the environmental media as contaminants can be obtained as generic MSDS from an on-line or web-based source.

Currently ARCADIS uses a service known as the HazMat Zone which is linked on the Health & Safety APEX site.)

The MSDS shall contain at least the following:

- Identity used on the label;
- Physical and chemical characteristics;
- Physical hazards;
- Health hazards;
- Primary route(s) of entry;
- OSHA permissible exposure limit, ACGIH threshold limit value and any other exposure limit;
- If it is listed on the NTP report on Carcinogens or has been found to be a potential carcinogen;

- Any general precautions for safe handling and any applicable control measures;
- Emergency and first aid procedures;
- Date of preparation or revision of the MSDS; and
- Name, address and phone number of party responsible for the MSDS.

A master file of MSDSs will be maintained and MSDSs shall be made readily available to all employees at a central office location or a readily available location at the project site. The MSDS master file shall be reviewed, at a minimum, annually or any time the MIL is updated and obsolete or outdated MSDSs shall be removed. MSDSs removed from the master file shall be retained for at least 30 years.

5.5 Non-ARCADIS Employers

If appropriate, the written program will include information regarding how other employers at the workplace will be provided the following:

- Access to MSDSs for chemicals/products introduced to the workplace by ARCADIS;
- Information on precautions that should be taken regarding these chemicals/products; and
- Information regarding any site-specific labeling system.

In addition, clients frequently ask for us to provide MSDS for the chemicals ARCADIS will bring onto their sites. The PM shall determine if this is a requirement. However, ARCADIS field staff can also ask the client or other parties working in their vicinity for MSDS for hazardous substances being used.

6. TRAINING

All employees who may be exposed to hazardous chemicals/products under normal operating conditions or in foreseeable emergency situations shall receive HazCom training. Training shall occur upon initial assignment to work, whenever workplace hazards change, or anytime a new hazard is introduced. Training will be followed per the requirements and instruction provided by Archimedes and Corporate H&S.

HazCom training shall include the following elements:

- The requirements of the HazCom standard;
- The location of the written HazCom program;

- The location of the MIL and MSDSs;
- Instructions on reading MSDSs;
- Details on labeling requirements and label information;
- Operations in the workplace that involve or generate hazardous chemicals;
- Hazards associated with chemicals/products in the workplace;
- Methods that may be used to detect the presence of hazardous chemicals/products; and
- Methods employees can use to protect themselves from hazardous chemicals/products including appropriate work practices, emergency procedures, and personal protective equipment (PPE).

7. REFERENCES

29 CFR 1910.1200 "Hazard Communication Standard"

Canadian Hazard Communication Standard (WHMIS)
http://www.hc-sc.gc.ca/ewh-semt/occup-travail/whmis-simdut/index-eng.php

8. RECORDS

The MSDSs shall be kept at the office location or in the project files

Training records will be kept in the corporate training database.

Exhibits for this Section:

Exhibit 1 – HazCom Program Checklist
Exhibit 2 – Template HazCom written program document
Exhibit 3 – Master Chemical Inventory Form
Exhibit 4 – List of Common Exemptions
Exhibit 5 – Samples of Common Container Labels

9. APPROVALS AND HISTORY OF CHANGE

Approved By:

Mija A. Coppola, Director, H&S Compliance Assurance, LPS, Communications

History of Change

Revision Date	Revision Number	Reason for change
1 June 2009	01	Original document

Exhibit 1 - HazCom Program Checklist

HAZARD COMMUNICATION PROGRAM COMPLIANCE CHECKLIST

ARCADIS Office: _____ **Jobsite** (if applicable):_____

Completed By (name/job title): _____ **Date**:_____

	Yes	No	Comments
1. Do you have a copy of CFR 1910.1200?			
• Have you read and understand the requirements?			
2. Do you have a written program?			
• Have program responsibilities been assigned?			
• Does the program establish a procedure to review and evaluate program on an annual basis?			
3. Has a list of all hazardous chemicals/substances in the office/jobsite been prepared?[1]			
• Does the program contain a method for updating this list?			
4. Is there an MSDS for each hazardous chemical/substance?			
• Does the program ensure that incoming hazardous chemicals/substances have an MSDS?			
5. Does the program ensure that all incoming hazardous chemicals/substances have labels?			
6. Does the program address how to identify			

[1] The Chemical Inventory Report Form should be used to complete this list.

new chemicals/substances before they are used? • Does the program address how employees will be informed of new chemicals/substances?			
7. Do employees understand how to detect the release of hazardous chemicals/substances?			
8. Are employees: • Aware of HazCom Standard requirements and information specific to this office/jobsite?			
• Familiar with hazards of the chemicals/substances at this office/jobsite? • Informed of the hazards of performing non-routine tasks?			
9. Has training been provided in regard to proper work practices and PPE?			
10. Does the training: • Provide information on emergency procedures/first aid including symptoms of overexposure?			
• Provide an explanation of labels and warnings that are used in the work area?			
• Describe where employees can find the MSDS? • Describe how to read/use an MSDS?			

COMMENTS: _____

_____

_____

Exhibit 2 – Template HazCom Written Program for Offices

HAZARD COMMUNICATION PROGRAM

ARCADIS OFFICE:	
WRITTEN BY:	**DATE WRITTEN:**
REVISED BY:	**DATE REVISED:**

Applicability

Where applicable, ARCADIS shall comply with the OSHA Hazard Communication ("HazCom") standard (29CFR 1910.1200) by maintaining a hazardous chemicals list and associated MSDS; by ensuring that containers are labeled; and by providing training to applicable employees. This written HazCom program applies to all work locations where there is potential for exposure to hazardous chemicals under normal working conditions or during an emergency situation. A copy of the written program may be obtained from: _____ Program Coordinator

The _____, is the Program Coordinator. The Program Coordinator will be available to answer questions regarding hazards and appropriate protective measures, and shall ensure that:

- The written program is reviewed at least annually, updated as necessary, and that documentation of the reviews are kept with the plan;
- A list of hazardous chemicals is completed on the "Master Chemical Inventory List (MIL) Form" and updated as necessary (see Exhibit 3 of ARC HSGE007);
- An MSDS is available for all chemicals on the Chemical Inventory Report form except those that are exempt from the standard;
- MSDS that are no longer applicable are archived and maintained for 30 years;
- All hazardous chemicals are properly labeled;
- All applicable employees and new hires have received training before they begin work to which this program applies; and
- Safe work practices are followed in regard to hazardous chemicals.

Exhibit 1 of ARC HSGE007 includes a checklist that may be used as a tool to assure compliance with the HazCom standard

List of Hazardous Chemicals

The Program Coordinator shall make a list of all hazardous chemicals and will review the list at least annually, or more often as necessary, and maintain and update the list as necessary. Hazardous chemicals that are bought for and kept at a particular job site will not be included on this list, but shall be included in the site specific health and safety plan. The completed MIL for the _____ office can be found at _____.

The Program Coordinator must be informed of all new hazardous chemicals purchased unless the chemical is being purchased for and kept at a particular job site. Upon receiving this information, the Program Coordinator will update the MIL within 10 business days. Employees in a position to purchase materials must adhere to purchasing department guidelines and assure new chemicals are not used until the MSDS information has been obtained and appropriate employee training occurs.

Material Safety Data Sheets (MSDS)

MSDS provide specific information on the chemicals used by this office. For each chemical listed on the MIL (other than those exempt from the HazCom standard), an MSDS shall be kept on file in a location that is easily accessible and known to all applicable employees.

Copies of applicable MSDS for this office can be found _____, in a [indicate if they are kept in a binder, folder or electronically] that is labeled _____ [if your office maintains MSDS in other locations, such as work vehicle or job site, note this information here]. Applicable MSDS should accompany the hazardous chemical/chemicals to the jobsite, and the Project Manager shall ensure that each work site has applicable MSDS on hand at the job site.

The Program Coordinator is responsible for acquiring and updating MSDS and will contact the chemical manufacturer or vendor if additional research is necessary or if an MSDS has not been supplied with an initial shipment/purchase.

The Program Coordinator must be informed of all new hazardous chemicals purchased unless the chemical is being purchased for and kept at a particular job site.

Labels and Other Forms of Warning

All hazardous chemicals must be properly labeled and the label should list at a minimum, the chemical identity, appropriate hazard warnings, and the name and address of the manufacturer, importer or other responsible party. The Program Coordinator can assist employees in verifying if containers are properly labeled and answer questions employees may have about label content.

Chemicals should be used in the original container whenever possible. If it becomes necessary to transfer a chemical to a portable/temporary container, the following rules apply:

- If it is intended for immediate use, no labels are required for the portable/temporary container; or

- If it will not be used immediately (e.g., used over several days or by various people), a label that identifies the hazards (e.g., samples in Exhibit 5 of ARC HSGE007) must be completed.
    - Hazard information from the manufacturer's hazard label should used to complete the temporary label.
    - The temporary label will be affixed to the temporary/portable container and removed once the container is no longer being used.
    - Remember, temporary labels are for internal use only and can't be used as or replace shipping labels.

Where applicable, the contents of pipes or piping systems shall be described in training sessions, and they do should be labeled as to their contents. (This will be a site specific issue that should be addressed in site specific safety plans)

[If you utilize stationary containers within a work area, include the following information in this program: If stationary containers within a work area have similar contents and hazards, labels shall be posted on them to convey hazard information.]

Non-Routine Tasks

Where applicable, site specific health and safety plans shall address the chemical hazards associated with non-routine tasks (e.g., cleaning tanks, entering confined spaces, etc.). The site specific plan will inform applicable employees of the hazardous chemicals to which they may be exposed and the precautions they must take to reduce or avoid exposure. It will also address any additional training that may be required.

Training

All employees who work with (or are in the vicinity of) hazardous chemicals or who are potentially exposed to hazardous chemicals, shall receive initial training on the HazCom Standard and the safe use of those hazardous chemicals.

The Program Coordinator_____ will conduct these training sessions in a _____ [indicate if you will use classroom, or an online/classroom combination] format. [Whether you are using an online or classroom program, information specific to your office must be part of the training. For example, who is the program coordinator, where is the chemical inventory form kept, where are the MSDS located, etc.] Whenever a new hazard is introduced, additional training shall be provided to applicable employees.

The training program shall emphasize these items:

- A summary of the standard and this written program.
- The chemical and physical properties of hazardous materials (e.g., flash point, vapor pressure, reactivity) and methods that can be used to detect the presence or release of chemicals (including, where applicable, chemicals in unlabeled pipes).
- The physical hazards of applicable chemicals (e.g., potential for fire, explosion, etc.).

- The health hazards, including signs and symptoms of exposure, of the chemicals in work area and any medical condition known to be aggravated by exposure to these chemicals.
- Procedures to protect against chemicals hazards (e.g., required personal protective equipment, and its proper use and maintenance; work practices or methods to ensure appropriate use and handling of chemicals; and procedures for emergency response).
- Work procedures to follow to assure protection when cleaning hazardous-chemical spills and leaks.
- Labeling system to be used.
- The location of the MSDS, how to read and interpret the information on labels and MSDS, and how employees may obtain additional hazard information.

The Program Coordinator or his/her designate will review the employee training program and make changes as necessary. Retraining is required when hazards change or when a new hazard is introduced into the workplace.

Contractors

The Program Coordinator shall advise contractors performing work in ARCADIS offices of any chemical hazards that may be encountered in the normal course of their work on the premises, the location of MSDS, the labeling system in use, the protective measures to be taken, and the safe handling procedures to be used. Each contractor bringing chemicals on-site must provide the Program Coordinator with the appropriate hazard information for these substances, including MSDS, labels, and precautionary measures to be taken when working with or around these chemicals.

Project Managers for ARCADIS projects will follow the requirements of the project health and safety plan for communication with the contractors used on projects.

Additional Information

Employees can obtain further information on this written program, the hazard communication standard, applicable MSDS, and chemical information lists from the Program Coordinator.

Exhibit 3 – Master Inventory List form

ARCADIS

MASTER CHEMICAL INVENTORY LIST (MIL) FORM

(Hazardous chemicals/substances bought specifically for one job and kept at that job site aren't listed here, but should be listed in the site specific Health and Safety Plan)

ARCADIS Office: _____

Jobsite Address (if applicable): _____

Date Of Inventory: _____ **Completed By** (name/job title): _____

Common Name	Amount On Hand[1]	Container Size	Container Type (e.g., plastic, metal, drum)	Hazard Rating (e.g., NFPA or HMIS®III, etc., or put N/A if not applicable)	MSDS On Hand (if no, explain below)	Work Practice(s) Associated With The Chemical	Check if Exempt (Per ARCADIS definition and example list.)

Explain each "No" listed under the MSDS column: _____

_____

Page ___ of ___

[1] Indicate the amount that is usually kept on hand.

Chemical Inventory Report Form (con't)

Common Name	Amount On Hand[1]	Container Size	Container Type (e.g., plastic, metal, drum)	Hazard Rating (e.g., NFPA or HMIS®III, etc., or put N/A if not applicable)	MSDS On Hand (if no, explain below)	Work Practice(s) Associated With The Chemical	Check if Exempt (Per ARCADIS definition and example list.)

Explain each "No" listed under the MSDS column: _____

_____

_____

Page ___ of __

[1] Indicate the amount that is usually kept on hand.

Exhibit 4 – List of Common Exemptions

For purposes of the ARCADIS HazCom program and to comply with the Occupational Safety and Health Administration Hazard Communication Standard (HCS), the following categories of materials are exempted from the requirements of the HazCom program:

- Articles defined as:
  - Items that are formed to a specific shape or design during manufacture; and
  - Items that have end use functions dependent in whole or in part upon its shape or design during end use; and
  - Items that do not pose a physical hazard or health risk to employees; and
  - Items that, under normal use, do not release more than very small quantities (e.g., minute or trace amounts of a hazardous chemical).
    - Note: If the use and/or repair of the article requires a modification that results in severe alterations of the article (e.g. grinding, cutting, welding, brazing, soldering, etc.), then the material that make up the article and any other material being used to alter the article ARE NOT exempted from the HazCom standard.
- Tobacco or tobacco products.
- Wood or wood products when handled as an article.
- Food or alcoholic beverages.
- Drugs intended for personal consumption by employees while in the workplace (e.g., first aid supplies).
- Cosmetics.
- Ionizing and non-ionizing radiation.
- Biological hazards (e.g. bloodborne pathogens, snake venom, poison ivy/oak, etc.)
- Any consumer product where the use results in a duration and frequency of exposure, which is not greater than the range of exposures that could reasonably be experienced by consumers when used for the purpose intended.
  - Examples of products used at ARCADIS that are used as a consumer would use them are:
    - window cleaner
    - paper correction fluid
    - sealed containers of cartridge toner for copiers
    - cleaning supplies in consumer-available quantities
    - dry cell batteries that could be used in consumer equipment

Note: The following are examples of products that **are not exempt** because they are used in a manner not considered consumer use:

- spray paint used for surveying, utility locates, etc,
- lab chemicals and supplies
- chemicals used for environmental testing equipment (pH buffers, chemical packets and dyes)
- cleaning supplies associated with lab work and decontamination (e.g., Alconox detergent)
- Cements and primers used for making PVC pipe connections
- Spray lubricants used for industrial equipment maintenance (e.g., WD-40 and rust removers)
- spray adhesives used as drafting supplies

Exhibit 5 – Sample Container Labels

These types of labels can be purchased from various vendors with pre-filled in or blank.

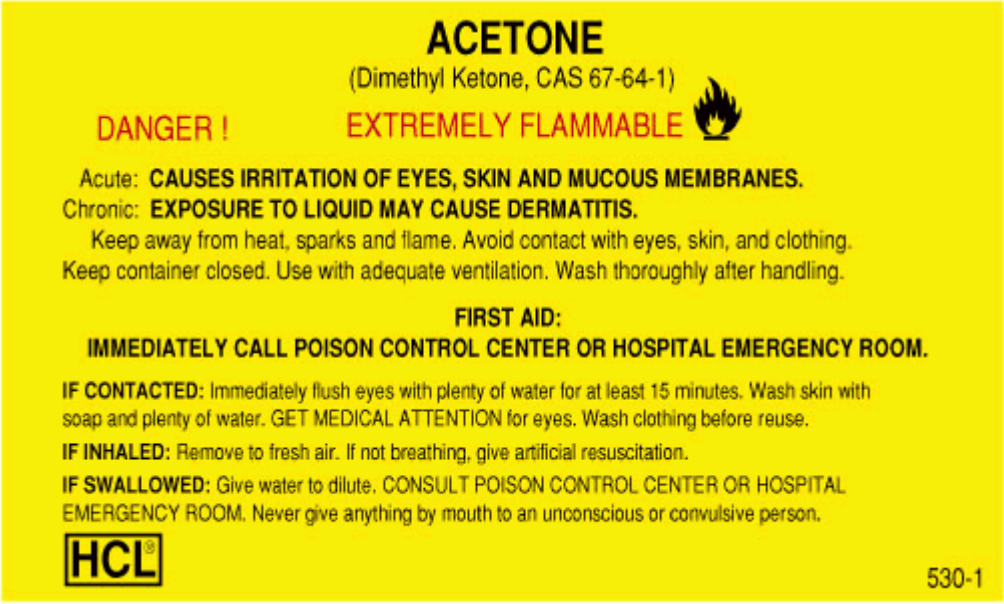

1. POLICY

It is ARCADIS US policy that ARCADIS staff will participate in tailgate meetings to be held at least once daily on ARCADIS project sites that occur outside of an office environment to ensure that the health and safety issues of the day's activities are understood by all affected parties and that appropriate controls are in place.

2. PURPOSE AND SCOPE

2.1 Purpose

This standard describes the requirements for implementing an incident- and injury-free workplace by providing guidance on tailgate safety meetings to be performed prior to all projects performed by ARCADIS staff outside of an office-setting or environment.

2.2 Scope

This standard applies to all non-office related activities performed by ARCADIS or on behalf of ARCADIS. If the site and project is controlled by ARCADIS, tailgate meetings will include the participation of all ARCADIS staff, ARCADIS subcontractors and other involved site personnel as appropriate. If the site is controlled by another party (e.g., a construction site on which ARCADIS is providing a resident engineer or owner's representative), then ARCADIS staff should attend the tailgate meeting held by the controlling party, if one is held. If the tailgate meeting does not address ARCADIS activities or is not deemed adequate, then the ARCADIS staff will hold their own tailgate meeting following this standard.

If there is only one ARCADIS staff on the site for the day, then the PM and field staff will conduct the tailgate via phone as deemed appropriate.

It is also ARCADIS US policy that more than one tailgate meeting may be held as appropriate for the activities.

3. DEFINITIONS

Definitions applicable to this standard may be found in ARC HSMS000 – Health and Safety Management System.

4. RESPONSIBILITIES

Field Supervisor – In the scope of this practice, the designated field supervisor will lead or designate an alternative leader to lead the tailgate meeting. In addition, the field supervisor will verify that in the tailgate meeting, the following are clearly established, communicated and reinforced, and that the workforce understands them:

- A process for the transfer of control of work between work groups as appropriate and applicable

- Specific standards and policies that will be followed (e.g., Health and Safety Plan (HASP), Job Loss Analysis (JLA), H&S Standards, Field H&S Handbook, etc.)

- Assignment of other responsibilities based on the site activities and hazards to competent staff

Project and Task Managers – are responsible for ensuring that all appropriate hazard assessments have been completed, that all project requirements have been communicated to the field supervisor and other responsible parties, that competent personnel, based on the activities and hazards, have been assigned to the project, and that all employees including ARCADIS, subcontractors and other site personnel know of their requirement and participation in all tailgate meetings conducted for the project.

Health and Safety Staff and Project Site Safety Officers or Supervisors – assist with the completion of hazard identification and assessments as appropriate for the project. In addition, these staff will assist with determining the proper controls and provide information for the tailgate meetings that is relevant to the site activities and the hazards to be encountered by employees.

Employees – are responsible for actively participating in the tailgate meetings, acknowledging their presence at the tailgate meetings, and participating in hazard assessments for the activities in which they will be involved. Employees are responsible for understanding the hazards of their activities, implementing the controls for the hazards and using Stop Work Authority if they don't understand the hazards, their job tasks, or if they do not feel safe.

5. PROCEDURE

5.1 Tailgate Meetings

Tailgate meetings will be held, at a minimum, at the start of each work day, shift or task change. It may be necessary to hold tailgate meetings at other times based on the site, activities, and personnel on the site. Tailgate meetings are usually conducted by the field supervisor, the site safety officer or both. At times, the Project Manager or Task Manager may lead the tailgate meeting.

Work crews that include a lone worker will hold a tailgate meeting by telephone with the Project or Task manager as appropriate. The lone worker or small workgroup will call in at the end of the day to complete the tailgate meeting form per this standard.

Tailgate meetings will review the planned work activities for the work period, discuss and resolve the risks and mitigations, discuss any health, safety, security and environment concerns and raise the consciousness of each worker before they start work. Utilizing the Tailgate Meeting form in Exhibit 1 will ensure that relevant topics are addressed.

5.2 Tailgate H&S Meeting Form

The *Tailgate H&S Meeting Form* (Exhibit 1) will be used to document the conduct of the tailgate H&S meeting. Copies of the completed form will be kept in the project files. It will be

completed by the designated leader of the meeting during the completion of the meeting and for post day activities review as indicated on the form.

5.3 Participation and Preparation

Effective tailgate meetings require participation. When selecting the location of the meetings, the meeting leader will ensure it is in a place free from distraction and that allows for interaction and participant comfort. This will help encourage participation.

6. TRAINING

No specific training or competence is required related to the conduct of the Tailgate Meeting.

7. REFERENCES

ARCADIS Health and Safety Plan standard – ARC HSFS010

8. RECORDS

Tailgate Meeting forms to be kept on-site and then in project files per ARCADIS project recordkeeping requirements

9. APPROVALS AND HISTORY OF CHANGE

Approved By: Mija Coppola, Director of H&S

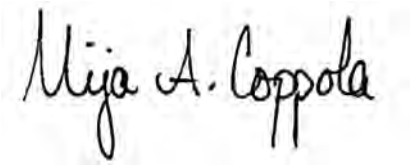

History of Change

Revision Date	Revision Number	Reason for change
14 September 2009	01	Original document
1 Feburary 2010	02	Made minor edits to text. Also, made modifications to Tailgate Meeting form. Changed JSA to JLA.
22 February 2010	03	Added tagline to the Tailgate meeting form

Exhibit 1 –Tailgate Meeting form

ARCADIS

Document Control Number:TGM - _____

TGM + *project number plus date as follows: xxxxxxxx.xxxx.xxxxx - dd/mm/year*

TAILGATE HEALTH & SAFETY MEETING FORM

This form documents the tailgate meeting conducted in accordance with the Project HASP. Personnel who perform work operations on-site during the day are required to attend this meeting and to acknowledge their attendance, at least daily.

Project Name:			**Project Location:**
Date:	**Time:**	**Conducted by:**	**Signature/Title:**
Client:		**Client Contact:**	**Subcontractor companies:**

TRACKing the Tailgate Meeting

Think through the Tasks (list the tasks for the day):

1 _____ 3 _____ 5 _____

2 _____ 4 _____ 6 _____

Other Hazardous Activities - Check the box if there are any other ARCADIS, Client or other party activities that may pose hazards to ARCADIS operations ☐ If there are none, write "None" here: _____

If yes, describe them here: _____

How will they be controlled? _____

Prework Authorization - check activities to be conducted that require permit issuance or completion of a checklist or similar before work begins:

	Doc #		Doc #		Doc #
☐ Not applicable		☐ Working at Height		☐ Confined Space	
☐ Energy Isolation (LOTO)		☐ Excavation/Trenching		☐ Hot Work	
☐ Mechanical Lifting Ops		☐ Overhead & Buried Utilities		☐ Other permit	

Discuss following questions (for some review previous day's post activities). **Check if yes** :

		☐ Topics from Corp H&S to cover?
☐ Incidents from day before to review?	☐ Lessons learned from the day before?	☐ Any Stop Work Interventions yesterday?
☐ Any corrective actions from yesterday?	☐ Will any work deviate from plan?	☐ If deviations, notify PM & client
☐ JLAs or procedures are available?	☐ Field teams to "dirty" JLAs, as needed?	☐ All equipment checked & OK?
☐ Staff has appropriate PPE?	☐ Staff knows Emergency Plan (EAP)?	☐ Staff knows gathering points?

Comments: _____

Recognize the hazards (check all those that are discussed) (Examples are provided) and **Assess** the Risks (Low, Medium, High - circle risk level) - Provide an overall assessment of hazards to be encountered today and briefly list them under the hazard category.

☐ Gravity (i.e., ladder, scaffold, trips) (L M H)	☐ Motion (i.e., traffic, moving water) (L M H)	☐ Mechanical (i.e., augers, motors) (L M H)
☐ Electrical (i.e., utilities, lightning) (L M H)	☐ Pressure (i.e., gas cylinders, wells) (L M H)	☐ Environment (i.e., heat, cold, ice) (L M H)
☐ Chemical (i.e., fuel, acid, paint) (L M H)	☐ Biological (i.e., ticks, poison ivy) (L M H)	☐ Radiation (i.e., alpha, sun, laser) (L M H)
☐ Sound (i.e., machinery, generators) (L M H)	☐ Personal (i.e. alone, night, not fit) (L M H)	☐ Driving (i.e. car, ATV, boat, dozer) (L M H)

Continue TRACK Process on Page 2

TAILGATE HEALTH & SAFETY MEETING FORM - Pg. 2

Control the hazards (Check all and discuss those methods to control the hazards that will be implemented for the day): Review the HASP, applicable JLAs, and other control processes. Discuss and document any additional control processes.

☒ **STOP WORK AUTHORITY** (Must be addressed in every Tailgate meeting - (*See statements below*)

☐ Elimination	☐ Substitution	☐ Isolation
☐ Engineering controls	☐ Administrative controls	☐ Monitoring
☐ General PPE Usage	☐ Hearing Conservation	☐ Respiratory Protection
☐ Personal Hygiene	☐ Exposure Guidelines	☐ Decon Procedures
☐ Emergency Action Plan (EAP)	☐ Fall Protection	☐ Work Zones/Site Control
☐ JLA to be developed/used *(specify)*	☐ LPO conducted *(specify job/JLA)*	☐ Traffic Control
☐	☐	☐ Other *(specify)*
☐	☐	☐

Signature and Certification Section - Site Staff and Visitors

Name/Company/Signature	Initial & Sign in Time	Initial & Sign out Time	I have read and understand the HASP

Important Information and Numbers

All site staff should arrive fit for work. If not, they should report to the supervisor any restrictions or concerns.

In the event of an injury, employees will call WorkCare at 1.800.455.6155 and then notify the field supervisor who will, in turn, notify Corp H&S at 1.720.344.3844.

In the event of a motor vehicle accident, employees will notify the field supervisor who will then notify Corp H&S at 1.720.344.3844 and then Corp Legal at 1.720.344.3756.

In the event of a utility strike or other damage to property of a client or 3rd party, employees will immediately notify the field supervisor, who will then immediately notify Corp Legal at 1.678.373.9556 and Corp H&S at 1.720.344.3500

Visitor Name/Co - not involved in work		
	In	Out
	In	Out
	In	Out
	In	Out

I will STOP the job any time anyone is concerned or uncertain about health & safety or if anyone identifies a hazard or additional mitigation not recorded in the site, project, job or task hazard assessment.

I will be alert to any changes in personnel, conditions at the work site or hazards not covered by the original hazard assessments.

If it is necessary to **STOP THE JOB**, I will perform **TRACK**; and then amend the hazard assessments or the HASP as needed.

I will not assist a subcontractor or other party with their work unless it is absolutely necessary and then only after I have done TRACK and I have thoroughly controlled the hazard.

Post Daily Activities Review - Review at end of day or before next day's work (Check those applicable and explain:)

☐ Lessons learned and best practices learned today: _____

☐ Incidents that occurred today: _____

☐ Any Stop Work interventions today? _____

☐ Corrective/Preventive Actions needed for future work: _____

☐ Any other H&S issues: _____

Keep H&S 1st in all things

WorkCare - 1.800.455.6155
Near Loss Hotline - 1.866.242.4304

1. POLICY

It is ARCADIS policy that during the conduct of their work, ARCADIS and subcontractor employees have the authority and responsibility to Stop Work immediately in any situation when the Health, Safety, Security and Environment hazards and associated risks associated with work being performed is not clearly understood, established or controlled. This standard presents the requirements to be observed if and when this situation occurs.

2. PURPOSE AND SCOPE

2.1 Purpose

This standard describes the authority, obligation and responsibility to stop potentially unsafe work at the earliest stage possible. Every ARCADIS and subcontractor employee is responsible for prevention of unsafe acts, behaviors or conditions, consequently preventing harm to people, the environment or property.

Every ARCADIS and subcontractor employee has the authority and obligation to stop work that he or she considers to be unsafe. The ARCADIS leadership team is committed to support anyone who exercises his or her 'Stop Work' authority. There will be no negative consequences as a result of 'Stop Work' actions.

2.2 Scope

This standard applies to all activities performed by ARCADIS or on behalf of ARCADIS. A stop work process will include the participation of all ARCADIS, ARCADIS subcontractors and other involved personnel as appropriate.

3. DEFINITIONS

Planned 'Stop Work' is a 'Stop Work' situation previously identified in a Job Loss Analysis, HASP or other standard (e.g., 'Stop Work' trigger)

'Stop Work' is the stopping of all activities associated with a task, condition, situation, action or activity (issue) that anyone views as potentially unsafe. 'Stop Work' can be applied to the single issue, a group of issues, or an entire job project or site as applicable.

4. RESPONSIBILITIES

Senior Leaders (including Account Managers and company leadership)

In the scope of this standard, senior leaders shall establish the clear expectation for ARCADIS employees and subcontractors to exercise 'Stop Work Authority', create a culture where 'Stop Work' is exercised freely, resolve 'Stop Work' conflicts when they arise, and hold those accountable who do not to comply with established 'Stop Work' policies.

Project Managers and Field Supervisors

In the scope of this standard, project managers and field supervisors are responsible for confirming that 'Stop Work' requirements and obligations are understood thoroughly by ARCADIS

and subcontractor employees, creating a culture where 'Stop Work' is exercised freely, honoring and responding promptly to requests to stop work, working to resolve issues to the satisfaction of all involved parties before operations resume, recognizing proactive participation and verifying that all 'Stop Work' actions are properly reported with required follow-up, as necessary.

ARCADIS and Subcontractor Employees

In the scope of this standard, ARCADIS and subcontractor employees are responsible for understanding their authority and obligations under 'Stop Work,' initiating a 'Stop Work' intervention when warranted, supporting the intervention of others and properly reporting all 'Stop Work' actions as described in this standard. ARCADIS and subcontractor employees are responsible for understanding the hazards of their activities, implementing the controls for the hazards and using 'Stop Work' authority if they don't understand the hazards, their job tasks, or if they do not feel safe for any reason. In addition, employees will participate in determining and implementing the solutions for mitigating the unsafe issue.

5. PROCEDURE

5.1 General Requirements:

- ARCADIS and subcontractor employees are made aware of their obligation to 'Stop Work' for issues that they consider to be unsafe.
- Employees have the authority, obligation and responsibility to stop any task or operation where there are concerns or questions regarding the control of the hazards or risks associated with a task or operation that is being performed.
- No work will resume until all 'Stop Work' concerns or questions have been adequately addressed and associated risks have been eliminated or mitigated to acceptable levels to the satisfaction of all parties involved.
- All employees are made aware of the actions they shall take, including reporting, when stopping unsafe work.
- All indications from personnel that the work is unsafe must be properly investigated as deemed appropriate for the situation. All instances of work being stopped for reasons of health and safety shall be recorded and appropriately investigated. This documentation may be completed using the Tailgate Meeting form or using the ARCADIS Incident Investigation process.
- Any form of retaliation or intimidation directed at any individual or company for exercising their authority as outlined in this standard will not be tolerated. Disregard for the requirements in this standard shall be addressed with disciplinary actions in accordance with ARCADIS policy.
- Before work begins, a responsible person shall be defined by the Project Manager for coordination of any 'Stop Work' activities, including hazard and risk assessment and mitigation actions following a 'Stop Work' intervention (refer to the Tailgate Meetings standard – ARC HSGE001).

5.2 'Stop Work' process

In general terms, 'Stop Work' involves:

- Initiating a 'Stop Work.'
- Notifying affected employees, other personnel (including client staff) and supervision.
- Assessing hazards and associated risks.
- Identifying and implementing controls.
- Resuming work once a hazard assessment and controls implementation (if applicable) are approved by a competent person and are satisfactory to all parties involved.

5.2.1 Initiate a 'Stop Work'

When a person identifies a perceived or actual unsafe condition, act, error, omission, confusion or lack of understanding that could result in harm to persons, the environment or property, he or she shall immediately initiate a 'Stop Work' intervention.

This intervention shall:

- Be initiated in a positive manner.
- Result in a stop of associated work activities, if there is an immediate risk of injury or accident; removal of all person(s) (also persons not directly related to the ARCADIS Work Team) from the area; as appropriate to the issue; stabilization of the situation and making the area as safe as possible, until more permanent solutions can be developed and implemented as appropriate to the situation.
- If there is no immediate risk, address the potentially unsafe issue with the person(s) potentially at risk and/or the person(s) causing the risk. This includes all affected employees of ARCADIS, subcontractor, client and other parties.

5.2.2 Notifying the Affected Parties

All personnel affected by the 'Stop Work' situation shall be notified as soon as possible .

5.2.3 Assessing Hazards and Associated Risks

A competent person (e.g. task manager, field supervisor, task or job expert, H&S resource) shall guide the assessment for all potential hazards and risks by involving the affected parties to determine the hazards and assess the associated risks, so that appropriate controls can be identified. This information will be documented on the Tailgate Meeting form or an incident investigation form in 4Sight.

5.2.4 Identifying Controls

To identify controls that eliminate risk or mitigate it to an acceptable level and to decide on an appropriate course of action, the following questions and others shall be considered:

- How can the risk be controlled or otherwise mitigated to an acceptable level and to the reasonable satisfaction of the parties involved?
- Is a competent person approving the hazard and risk assessment and the identified controls in order to prepare to re- start work?

All affected parties should be in agreement with the hazard and risk assessment and controls identification.

The results of the hazard and risk assessment and controls identification resulting from the 'Stop Work' shall be reported, documented and maintained on either Tailgate Meeting form or the incident investigation form as appropriate for the issue.

5.2.5 Qualifiers for Stopping/Resuming Work

The following should be considered when stopping or resuming work as the result of a 'Stop Work' intervention:

- If the 'Stop Work' intervention is based on a perceived (but not an actual) risk as determined from the hazard and risk assessment, the affected person(s), as appropriate, should:
    - Show appreciation to the initiator for his or her awareness and concern.
    - Proceed with work.
    - Share the learnings with the initiator and involved parties.
- If the 'Stop Work' intervention is based on an actual risk that cannot be immediately assessed and/or controlled on site by the present employees and available resources, work shall be suspended. If the identified controls that mitigate the risk in the 'Stop Work' situation are not within the original scope of work, the change will be managed appropriately, and the JSA and HASP should be reviewed to include a hazard and risk assessment and identify subsequent controls.
- If the work is in the scope of a permit, the permit issuer shall review/reissue the permit with the necessary changes or modifications.

Work can be resumed only once a competent person with the appropriate level of authority approves the hazard and risk assessment and the implemented controls and all parties are satisfied with the controls.

5.3 Reporting

All planned and unplanned 'Stop Work' interventions shall be documented on the Tailgate Meeting form or on the incident investigation form as appropriate to the issue.

Adequate descriptions shall be given of the act, behavior or condition that caused the 'Stop Work' intervention, its hazard and risk assessment and implemented risk mitigations.

'Stop Work' reports, like other incident reports, shall be reviewed by H&S personnel and reported to senior leaders to:

- Measure participation.
- Determine the quality of interventions and follow-up.
- Track common issues and identify trends and opportunities for improvement.
- Facilitate the sharing of learnings.
- Provide feedback from recognition programs.

The H&S team shall regularly communicate incident details regarding the number of 'Stop Work' actions reported by practice as well as details regarding common trends and learnings.

6. TRAINING

Training on Stop Work initiation and subsequent measures as desribed in this standard will be conducted as follows:

- Basic H & S implementation training for all employees performing field work
- Annual refresher trainig
- Tailgate meetings

7. REFERENCES

ARCADIS Health and Safety Plan standard – ARC HSFS010

ARCADIS Incident Investigation Standard – ARC HSMS010

8. RECORDS

Tailgate Meeting forms

Incident Investigation reports

9. APPROVALS AND HISTORY OF CHANGE

Approved By: Mija Coppola

History of Change

Revision Date	Revision Number	Reason for change
15 February 2010	01	Original document

ARCADIS
Infrastructure, environment, facilities

Imagine the result

Field Equipment Decontamination

Rev. #: 3

Rev Date: April 26, 2010

Approval Signatures

Prepared by: _____ Date: 4/26/2010
Keith Shepherd

Reviewed by: _____ Date: 4/26/2010
Richard Murphy (Technical Expert)

I. Scope and Application

Equipment decontamination is performed to ensure that sampling equipment that contacts a sample, or monitoring equipment that is brought into contact with environmental media to be sampled, is free from analytes of interest and/or constituents that would interfere with laboratory analysis for analytes of interest. Equipment must be cleaned prior to use for sampling or contact with environmental media to be sampled, and prior to shipment or storage. The effectiveness of the decontamination procedure should be verified by collecting and analyzing equipment blank samples.

The equipment cleaning procedures described herein includes pre-field, in the field, and post-field cleaning of sampling tools which will be conducted at an established equipment decontamination area (EDA) on site (as appropriate). Equipment that may require decontamination at a given site includes: soil sampling tools; groundwater, sediment, and surface-water sampling devices; water testing instruments; down-hole instruments; and other activity-specific sampling equipment. Non-disposable equipment will be cleaned before collecting each sample, between sampling events, and prior to leaving the site. Cleaning procedures for sampling equipment will be monitored by collecting equipment blank samples as specified in the applicable work plan or field sampling plan. Dedicated and/or disposable (not to be re-used) sampling equipment will not require decontamination.

II. Personnel Qualifications

ARCADIS field sampling personnel will have current health and safety training, including 40-hour HAZWOPER training, site supervisor training, and site-specific training, as needed. In addition, ARCADIS field sampling personnel will be versed in the relevant SOPs and possess the skills and experience necessary to successfully complete the desired fieldwork. The project HASP and other documents will identify any other training requirements such as site specific safety training or access control requirements.

III. Equipment List

- health and safety equipment, as required in the site Health and Safety Plan (HASP)
- distilled water

- Non-phosphate detergent such as Alconox or, if sampling for phosphorus phosphorus-containing compounds, Luminox (or equivalent).
- tap water
- rinsate collection plastic containers
- DOT-approved waste shipping container(s), as specified in the work plan or field sampling plan (if decontamination waste is to be shipped for disposal)
- brushes
- large heavy-duty garbage bags
- spray bottles
- (Optional) – Isoprophyl alcohol (free of ketones) or methanol
- Ziploc-type bags
- plastic sheeting

IV. Cautions

Rinse equipment thoroughly and allow the equipment to dry before re-use or storage to prevent introducing solvent into sample medium. If manual drying of equipment is required, use clean lint-free material to wipe the equipment dry.

Store decontaminated equipment in a clean, dry environment. Do not store near combustion engine exhausts.

If equipment is damaged to the extent that decontamination is uncertain due to cracks or dents, the equipment should not be used and should be discarded or submitted for repair prior to use for sample collection.

A proper shipping determination will be performed by a DOT-trained individual for cleaning materials shipped by ARCADIS.

V. Health and Safety Considerations

Review the material safety data sheets (MSDS) for the cleaning materials used in decontamination. If solvent is used during decontamination, work in a well-ventilated area and stand upwind while applying solvent to equipment. Apply solvent in a manner that minimizes potential for exposure to workers. Follow health and safety procedures outlined in the HASP.

VI. Procedure

A designated area will be established to clean sampling equipment in the field prior to sample collection. Equipment cleaning areas will be set up within or adjacent to the specific work area, but not at a location exposed to combustion engine exhaust. Detergent solutions will be prepared in clean containers for use in equipment decontamination.

Cleaning Sampling Equipment

1. Wash the equipment/pump with potable water.

2. Wash with detergent solution (Alconox, Liquinox or equivalent) to remove all visible particulate matter and any residual oils or grease.

3. If equipment is very dirty, precleaning with a brush and tap water may be necessary.

4. (Optional) – Flush with isopropyl alcohol (free of ketones) or with methanol. This step is optional but should be considered when sampling in highly impacted media such as non-aqueous phase liquids or if equipment blanks from previous sampling events showed the potential for cross contamination of organics.

5. Rinse with distilled/deionized water.

Decontaminating Submersible Pumps

Submersible pumps may be used during well development, groundwater sampling, or other investigative activities. The pumps will be cleaned and flushed before and between uses. This cleaning process will consist of an external detergent solution wash and tap water rinse, a flush of detergent solution through the pump, followed

by a flush of potable water through the pump. Flushing will be accomplished by using an appropriate container filled with detergent solution and another contained filled with potable water. The pump will run long enough to effectively flush the pump housing and hose (unless new, disposable hose is used). Caution should be exercised to avoid contact with the pump casing and water in the container while the pump is running (do not use metal drums or garbage cans) to avoid electric shock. Disconnect the pump from the power source before handling. The pump and hose should be placed on or in clean polyethylene sheeting to avoid contact with the ground surface.

VII. Waste Management

Equipment decontamination rinsate will be managed in conjunction with all other waste produced during the field sampling effort. Waste management procedures are outlined in the work plan or Waste Management Plan (WMP).

VIII. Data Recording and Management

Equipment cleaning and decontamination will be noted in the field notebook. Information will include the type of equipment cleaned, the decontamination location and any deviations from this SOP. Specific factors that should be noted include solvent used (if any), and source of water.

Any unusual field conditions should be noted if there is potential to impact the efficiency of the decontamination or subsequent sample collection.

An inventory of the solvents brought on site and used and removed from the site will be maintained in the files. Records will be maintained for any solvents used in decontamination, including lot number and expiration date.

Containers with decontamination fluids will be labeled.

IX. Quality Assurance

Equipment blanks should be collected to verify that the decontamination procedures are effective in minimizing potential for cross contamination. The equipment blank is prepared by pouring deionized water over the clean and dry tools and collecting the deionized water into appropriate sample containers. Equipment blanks should be analyzed for the same set of parameters that are performed on the field samples collected with the equipment that was cleaned. Equipment blanks are collected per equipment set, which represents all of the tools needed to collect a specific sample.

X. References

USEPA Region 9, Field Sampling Guidance #1230, Sampling Equipment Decontamination.

USEPA Region 1, Low Stress (low flow) Purging and Sampling Procedure for the Collection of Groundwater Samples from Monitoring Wells.

EXECUTIVE SUMMARY

Damaging an underground or above ground utility can result in serious injury and loss of life, disrupt essential services, and create significant liability to ARCADIS, clients and subcontractors. Therefore, it is ARCADIS' policy that the presence of all existing utilities will be investigated and cleared (to the extent feasible) by locating, marking, and, where appropriate, visually verifying before the start of any field operation. The following requirements are mandatory under this policy:

- A minimum of three (3) reliable lines of evidence are required for an acceptable utility clearance.
- Additional lines of evidence are required if the primary lines of evidence cannot adequately identify subsurface, submarine or above ground utilities with reasonable certainty.
- The lines of evidence used will be reasonable and appropriate for the conditions expected to be encountered and the type of utilities expected to be encountered (e.g., gas line versus an irrigation line).
- Utility clearance information will be documented on the ARCADIS Utility and Structures Checklist or equivalent client provided checklist or permit presenting equivalent information.
- Employees overseeing utility clearance activities will:
    - Be familiar with the contents of this standard;
    - Have one year field experience in the identification of utilities; and
    - Have training and six months experience in the proper operation and results interpretation of any clearance equipment used by ARCADIS employees, including without limitation, magnetometers and ground penetrating radar.
- All utility strikes must be reported to Corporate Health and Safety and Legal within 24 hours using the Utility Line and Incident Involving a Third Party Incidents Investigation Form. Do not enter the incident into 4-Sight until approved to do so by Corporate Legal.

Report Utility Incident Now

1. POLICY

It is the practice of ARCADIS and its affiliated companies to implement appropriate, reasonable and practical standards within acceptable and customary industry practices to promote the health and safety of its employees, and avoid and mitigate exposure of risk in the performance of their work. In furtherance of this policy, ARCADIS promotes and encourages compliance by all employees with this policy and standards relating to work in the vicinity of subsurface, submarine or aboveground utilities.

2. PURPOSE AND SCOPE

2.1 Purpose

This standard directs general safety standards and best practices associated with the identification and management of subsurface, submarine and aboveground utilities on project sites.

2.2 Scope

This standard assigns responsibilities and expectations for proper utility clearance by both ARCADIS employees and ARCADIS subcontractors at project sites.

3. DEFINITIONS

Refer to ARC HSFS-019 Supplement 1 for definitions of terms used in this standard.

4. RESPONSIBILITIES

4.1 Project Manager Responsibilities

For every project site having the potential to come into contact with utilities, Project Managers must ensure that:

- The requirements of this standard are followed.
- Local regulations governing utility clearance are followed.
- Efforts are made to work with the client, project site representatives and subcontractors to identify the nature of any utilities, and to determine what control processes need to be implemented by ARCADIS and the subcontractors to prevent damage to these utilities and to properly manage the effects in the event there is utility damage.
- Utility clearance activities are only delegated to a Task Manager or other individual meeting the requirements of section 4.2 below, as appropriate. However, even if the Project Manager delegates certain responsibilities, the Project Manager maintains primary responsibility for a complete utility clearance.

4.2 Field Personnel Responsibilities

ARCADIS field personnel conducting work on a project site having the potential to come into contact with utilities have the responsibility to:

- Read, understand, and follow this standard and complete the appropriate checklists during the on-site utility locate process.
- Complete a minimum of 1 year of utility clearance related experience before accepting responsibility for any utility clearance tasks.
- Complete training and have 6 months of experience in operating and interpreting the results of remote sensing technologies, including without limitation, magnetometers and ground penetrating radar, before operating such technologies.
- Use their Stop Work Authority to eliminate any reasonable concern if utilities cannot be reasonably located.
- Ensure that ARCADIS subcontractors conduct their own reasonable independent utility clearance efforts as required by ARCADIS' standard subcontract, and are aware of any ARCADIS clearance standards used onsite.
- Be on site during any active intrusive activities involving contractor under contract to ARCADIS.

4.3 ARCADIS Subcontractor Responsibilities

According to ARCADIS' standard subcontract, subcontractors have agreed to take responsibility for any damages resulting from a utility impact cause by their work. Therefore, ARCADIS subcontractors are expected to take reasonable time and diligence to conduct their own independent utility clearance using reasonable standards and processes. Subcontractors have the responsibility to stop their work if utility concerns are identified and will report those concerns to the ARCADIS employee overseeing their work activities. ARCADIs staff should reinforce these responsibilities with subcontractors during job safety briefings.

5. STANDARD

5.1 General

Protocols to be followed during utility clearance activities are outlined in:

- Best Practices for Project Managers (or Their Delegates) Concerning Utility Clearance (ARC HSFS-019 Supplement 2).
- Best Practices for Field Personnel Concerning Utility Clearance (ARC HSFS-019 Supplement 3).

5.2 Lines of Evidence

A minimum of 3 lines of evidence are required for an appropriate utility clearance as defined in this standard. Generally, the following lines of evidence may be utilized to meet this requirement:

- Contact the State One Call or equivalent service (Nationwide "811" is acceptable) if working within the right-of-way or public areas served by such services. For work on private property or in areas not served by such services, utilize a reputable private utility locating company to locate and mark the utilities. Utilization of a private utility locator is encouraged for all projects with subsurface or submarine utility issues.

- Use detailed scaled site utility plans, preferably in the form of an "as-built" or "record" drawing, to identify and/or confirm utility locations.

- Conduct a detailed visual site inspection to identify and/or confirm utility locations. For underground utilities, conduct an inspection for structures that tend to indicate the presence and general location of such utilities, including, but not limited to manholes, vaults, valve covers, valve markers, telephone pedestals, transform housings, fire hydrants, spigots, sprinkler heads, air relief valves, backflow preventers, meters, downspouts going into the subsurface, power poles with wring going into the subsurface and line markers. Saw cut lines and concrete /asphalt repairs often yield valuable information regarding utility locations. Always discuss the presence of utilities with the site owner, operator or occupant to identify any potential utilities that might not be readily identified by non intrusive clearing methods or may be:

    - At depths > 5 ft below ground surface; or

    - At very shallow depths (< 2ft below ground surface) such as electrical conduits/wiring, irrigation lines, etc.

View the Utilities and Structures Checklist

If one of the above lines of evidence cannot be utilized, or if using the above lines of evidence does not adequately identify utilities with reasonable certainty, one or more additional lines of evidence must be utilized. Commonly used lines of evidence are listed on the Utility and Structures Checklist.

A discussion of use and limitations associated with common utility clearance methods is provided in ARC HSFS-019 Supplement 4.

The lines of evidence will be recorded on the Utility and Structures Checklist or equivalent client provided checklist or permit presenting equivalent information.

5.3 Color Codes Used for Utility Markings

The following colors are used for marking utilities. Some government agencies or large industrial facilities may use additional colors not provided below. ARCADIS policy is to assume any paint marking or pin flag color not provided below is a subsurface utility marking until proven otherwise.

COLOR	Utility Line
WHITE	Proposed Excavation
PINK	Temporary Survey Markings
RED	Electrical Power Lines, Cables, Conduit and Lighting Cables
YELLOW	Gas, Oil, Steam, Petroleum or Gaseous Materials
ORANGE	Communication, Alarm or Signal Lines, Cables or Conduit
BLUE	Potable Water
PURPLE	Reclaimed Water, Irrigation and Slurry Lines
GREEN	Sewer and Drain Lines

APWA and ANSI standard Z-53.1

5.4 Working in Close Vicinity of Subsurface Utilities

No work will be conducted within 30 inches of a subsurface utility marking, or as prescribed by the utility owner, unless the utility is exposed through hand clearing. Make sure to factor the diameter of the utility when determining the 30 inch buffer zone as this may increase the distance from the actual marking (if the markings do not indicate diameter of utility).

Manual clearing methods such as shoveling, using pick axes, digging bars and other hand tools should be used with caution. Excessive down force, prying or use in poor/obstructed visibility conditions is prohibited as these tools can damage utilities.

For borings and excavations, if the utility is known to be at depths where hand clearing is not reasonable or creates additional safety concerns, no work will be performed within 30 inches vertically or horizontally of the utility unless manual clearing is performed under the oversight of an Excavation Competent Person as defined in the ARCADIS Excavation and Trenching H&S standard (ARC HSCS005).

For horizontal borings, to avoid potential of utility strike, damage from vibration, damage by pressure of the advancing boring, do not plan the drill boring location within 30 inches vertically of utilities. This requirement applies even if the operating contractor has technology that places the location to within a few inches. Make sure to factor the diameter of the utility when determining the 30 inch buffer zone.

Additional cautions are required when coring/cutting through or removing concrete or asphalt. Utilities may be encased within these materials or in the gravel sub grade under these materials and may be damaged during the utility clearance process. Always work slowly, methodically and frequently stop work to evaluate conditions during these work activities.

Additional cautions for horizontal borings include gravity utilities such as sewers and storm drains as the depth of these utilities will change (sometimes

significantly) as they run across the project site. Always obtain the utility depth at the location where the boring will actually cross the line.

5.5 Acceptable Clearance for Working in Vicinity of Overhead Power Lines

No work will be performed by ARCADIS or a subcontractor where any equipment is within the limits specified below, unless the power line has been properly covered or de-energized by the owner or operator of the power line:

Power Line Voltage Phase to phase (kV)	Minimum Safe Clearance (feet)
50 or below	10
Above 50 to 200	15
Above 200 to 350	20
Above 350 to 500	25
Above 500 to 750	35
Above 750 to 1,000	45

ANSI standard B30.5-1994, 5-3.4.5

5.6 Reporting Utility Incidents

ARCADIS field personnel involved with any subsurface, submarine, and above-ground utility strikes should immediately stop work and contact the Project Manager to discuss the incident. The utility strike must be reported to Corporate Health and Safety and Legal Departments within 24 hours. Use the Utility Line and Incidents Involving a Third Party Incident Investigation Form as part of the notification process.

Selected utility strike incidents may also utilize a conference call with operations management to review findings and lessons learned. The Divisional Health and Safety Manager will make the determination concerning the need to have the call, and will arrange the call, if deemed necessary.

5.7 Relationship of this standard to the Project Specific HASP

With the exception of the Utility and Structures Checklist, this standard, including most supplements, are not designed to be printed off and attached to project HASPs. During project health and safety planning, this standard will be reviewed and applicable clearance technologies and methods will be documented on the Utility and Structures Checklist.

Additionally, emergency action standards specific to utility strikes should be addressed. ARC HSFS-019 Supplement 5 provides general guidelines for emergency response to utility strikes. Applicable information may be attached to the Utility and Structures Checklist to facilitate communication of response expectations.

5.8 Required Contract Terms and Conditions

ARCADIS' standard client and subcontractor contracts contain required terms and conditions defining responsibility for utility clearance and the allocation of risk associated with an impacted utility. These terms and conditions have prescribed language concerning subsurface work that is presented in ARCADIS client contracts and ARCADIS subcontractor contracts. If such provisions cannot be agreed upon, the reasons are documented and other risk-management actions should be identified, such as limits of liability, additional physical investigations, additional lines of evidence or utility location, assignment of risk to subcontractors, etc. In addition, any changes to these terms and conditions require approval by Legal Services.

6. TRAINING

Employees responsible for coordinating or conducting utility clearance activities will be familiar with the requirements of this standard.

7. REFERENCES

- Utility and Structures Checklist
- Utility Strike and Incidents Involving Third Parties Investigation Form
- HSFS-019 Supplement 1, Utility Definitions
- HSFS-019 Supplement 2, Best Practices for Project Managers (or Their Delegates) Concerning Utility Clearance
- HSFS-019 Supplement 3, Best Practices for Field Personnel Concerning Utility Clearance
- HSFS-019 Supplement 4, Use and Limitations Associated with Common Utility Clearance Methods
- HSFS-019 Supplement 5, Emergency Action Plan guidelines for Utility Strikes
- ARC HSCS005 Excavation and Trenching
- Required client contract language concerning subsurface work
- Required subcontractor language concerning subsurface work

8. RECORDS

8.1 Utility Clearance Records

All records (maps, checklists and documentation of communications) used to determine the location of utilities should be retained and kept in the project file.

9. APPROVALS AND HISTORY OF CHANGE

Approved By: Tony Tremblay, Environment Division Health and Safety Manager

History of Change

Revision Date	Revision Number	Reason for change
13 December 2006	01	Original document
26 March 2007	02	Put in new company format
15 May 2007	03	Added nation-wide 811 number
6 September 2007	04	Changing over to new template format
22 February 2008	05	Changing over to new template format
13 January 2009	06	Define lines of evidence
4 October 2010	07	Reformatting and addition of utility clearance information

1. POLICY

It is ARCADIS US policy to be proactive in the identification, assessment and control of health and safety hazards and associated risks. To those means, any work involving trenching and excavation that is under the control or direction of ARCADIS or an ARCADIS subcontractor will be accomplished following, at a minimum, this procedure.

It is ARCADIS' policy that ARCADIS staff will not enter excavations and trenches unless it is absolutely necessary. If there are no suitable alternatives and it becomes necessary to enter excavations or trenches, this procedure, at a minimum will be strictly followed.

It is also the policy of ARCADIS to ensure an OSHA-defined Excavation Competent Person is on-site for all excavation work under ARCADIS contractual control. The competent person will be provided by the entity on site responsible for performing the excavation work unless otherwise required by the client. Thus, if an ARCADIS subcontractor is conducting the excavation work, that subcontractor will provide the competent person. If ARCADIS is self-performing the excavation services, then ARCADIS will provide a competent person whether a specialized subcontractor or authorized employee.

2. PURPOSE AND SCOPE

2.1 Purpose

To effectively control or eliminate the hazards presented by working near or entry into excavations or trenches, this procedure sets forth the accepted practice for and establishes the requirements for workplace safety near excavations and trenches and employee and subcontractor entry into such.

2.2 Scope

This procedure along with associated checklists and the Utility Location procedure (ARC HSFS019) apply to all employees of ARCADIS-US. Only trained and authorized personnel are permitted to work near or enter excavations and trenches, perform rescue services, or act as the excavation competent person.

3. DEFINITIONS

Exhibit 1 includes relevant definitions to this procedure including that for competent person qualifications.

4. RESPONSIBILITIES

4.1 Corporate H&S with Division and Practice Experts

On an annual basis, review and update, as necessary, this procedure. In addition, review cancelled checklists periodically to ensure conformance to this procedure. Provide the excavation competent person and qualified person training and retraining, or recommend qualified training provider. Provide technical assistance regarding excavation and trench protocol, atmospheric testing equipment, PPE, hazard assessment and research

information on unusual hazards. Audit project-specific excavation sites for compliance with this procedure.

4.2 Principal in Charge (PIC), Project Manager (PM), and Task Manager (TM)

PIC, PM and TMs are responsible to:

- Verify that all excavation and trench protocols are properly identified and addressed within the project work plan, project health & safety plan, and/or other project-related documents.
- Verify that their divisional or project team employees have received the proper training provided by Corporate Health & Safety or qualified training source prior to conducting excavation/trenching entry activities.
- Verify that any ARCADIS employee acting as the Excavation Competent person has been authorized and trained to do so as noted in Exhibit 1
- Verify that the proper entry equipment, including personal protective equipment (PPE), atmospheric testing equipment and safety equipment, is available for use by their divisional employees.
- Verify that copies of the completed checklists are available for Corporate Health and Safety review and retained with the project files

4.3 Health and Safety Plan Writers and Reviewers

Utilize this procedure as guidance to ensure the appropriate identification, assessment and control of excavation and trenching hazards for documentation in project HASPs

4.4 Entry/Work Supervisors (also see Training and Duties of Entry Supervisor)

- Work in direct coordination with and under the direction of the project excavation competent person
- Interface with the client representative to identify hazards associated with the client's excavation and trenching and/or work permit programs.
- Review existing soil sampling (if any) data or other pertinent hazard characterization information recorded by the client.
- Investigate the client's excavation/trenching protocol, to verify that any identified hazards and previous experience with earthwork at the site is properly communicated.
- Coordinate entry operations with the client's employees when both client and ARCADIS employees will be working in or near an excavation/trench.
- Coordinate necessary rescue assistance with either the client's in-house rescue team and/or the offsite rescue assistance specified by the client. The offsite rescue

assistance specified by the client must have applicable rescue experience and be within a reasonable response distance.

- Verify that the client takes the necessary precautions in notifying their employees that our employees will be installing an excavation or trench.
- Review the lockout/tagout and isolation measures implemented by the client as necessary based on proximity of utilities or other energy sources in the area of the excavation/trench
- Immediately report any unusual or unforeseen excavation or trenching hazards to Corporate Health and Safety prior to authorizing entry
- Verify that all tests and precautionary measures identified on the Daily/Periodic Inspection Checklist located in Exhibit 1 and the ARCADIS Utility Location Policy and Procedure ARC HSFS019 has been performed prior to authorizing subsurface work or entry into an excavation or trench
- Offer all entrants an opportunity to review the applicable control measures and testing results and an opportunity to request a reevaluation as necessary
- Issue, authorize, and have the Utility Clearance and Daily/Periodic Inspection forms readily available for review
- Verify that copies of the completed clearance forms and checklists are properly disseminated to Corporate Health and Safety and retained with the project files, as specified in Section 8.0 – Records.

4.5 Entrants

- Qualified Employee Entrants must have training and instruction in their duties and responsibilities regarding the following:
- Recognize the hazards which may be faced during entry, as well as the signs and symptoms of exposure to the hazard(s).
- Maintain visual contact and/or verbal communications with the attendant at all times.
- Use the PPE, air monitoring and testing equipment that has been provided or have access to the information.
- Maintain an awareness of all required hazard controls and consult with the Competent Person as necessary
- Obey evacuation orders given by the Attendant, automatic alarm activation, or when self-perceived.

4.6 Competent Person

Meet all of the requirements specified for the Qualified Employee Entrants plus adequate training and experience for their duties and responsibilities to complete the following tasks:

- Anticipation, identification and control of excavation and trenching hazards, as well as the signs and symptoms of exposure to the hazard(s), and the Authority to implement all corrective actions including Stopping Work.
- Implement the ARCADIS Utility Clearance Policy and Procedure and complete the Daily/Periodic Excavation Inspection Checklist
- Verify adequate training and experience of all Entrants prior to entry

4.7 Attendants

- An attendant must be stationed outside the excavation and be available to monitor operations above and below ground. The attendant may have no other duties besides those listed in this section.
- All attendants must have training and instruction in their duties and responsibilities regarding excavation/trenching entry. The following are assigned duties.
- Maintain an accurate count of all entrants in the excavation
- Monitor activities both inside and outside the excavation/trench to verify the continued safety of entrants
- Maintain visual contact or verbal communication with all entrants
- Order evacuation of the excavation/trench if an uncontrolled hazard develops, either within or outside the space, or upon observing a behavioral effect of hazard exposure among entrants
- Keep unauthorized persons away from the excavation area
- Participate in non-entry rescue as appropriate
- Summon rescue and other emergency services
- Attendants must maintain current certification in basic first aid and cardiopulmonary resuscitation (CPR).

4.8 All ARCADIS Employees

Use the TRACK process described below regularly and frequently. In addition, employees read and understand all documented hazard identification and risk assessments conducted using the HARC process and documented in HASPs, JSAs, and other written plans that are associated with their work. ARCADIS employees will:

- Recognize the hazards of trenches and excavations
- Understand and follow the methods for working near trenches and excavations
- Notify the PIC, PM, TM or entry/work supervisor if they have not received appropriate training
- Participate in entry operations only if trained and authorized to do so
- Never enter an excavation/trench without completion of the required Utility Location Procedure, Daily/Periodic Inspection Checklist and have an authorized attendant
- Never attempt entry rescue within a excavation unless trained in entry rescue with appropriate equipment available
- If unexpected conditions arise during entry, immediately notify other entrants, evacuate the space and inform the designated Competent Person

5. PROCEDURE

5.1 General Safety Requirements for all Excavations

- All surface obstructions must be moved or supported so as to protect employees and equipment.
- Prior to excavation, all underground installations (water, electric, telephone, gas, etc.) must be located and documented in accordance with ARCADIS Utility Clearance Policy and Procedure ARC HSFS019.
- When excavating in areas near underground installations, proper precautions must be taken to determine the exact location of the installations and to adequately protect and support them. While an excavation is open, underground installations shall be protected, supported or removed as necessary to protect employees.
- Structural ramps that are used solely by employees as a means of access or egress from excavations shall be designed by a competent person.
- Structural ramps used for access or egress of equipment shall be designed by a competent person qualified in structural design, and shall be constructed in accordance with the design.
- Ladders used for access and egress from the excavation must extend at least 36” (3 feet) above the landing surface.
- If personnel are working in a location exposed to vehicular traffic they must be provided with and be required to wear reflective safety vests. Adequate, signs, barriers or other equivalent traffic controls must be used to protect employees.

- Personnel are not permitted to be beneath elevated loads handled by equipment or be in excavations when heavy equipment is digging in or near the excavation.

- Mobile equipment located near open excavations must be adequately protected from falling or rolling into excavations by the use of barricades or warning devices.

- All excavations over 4 feet in depth must be tested for hazardous atmospheres whenever personnel are required to enter and a potential exists for the existence of hazardous contaminants or oxygen deficiency. Excavations less than 4 feet in depth must be evaluated by the competent person and at the competent person's discretion be tested for hazardous atmospheres whenever personnel are required to enter and a potential exists for the existence of hazardous contaminants or oxygen deficiency.

- Means of rescue including a lifeline and body harness must be used by personnel entering excavations with a potential for air hazards. A standby person must be stationed outside the excavation to tend the lifeline(s).

- Water must not be allowed to accumulate in open excavations where employees are working. When necessary, means such as diverting natural drainage around the excavation or actively pumping water must be used to prevent or control water accumulation.

- All structures adjacent to an open excavation must be supported, or a registered professional engineer (PE) must determine that the structure will not be affected by the excavation activities.

- Excavated materials (spoil) must be placed no closer than 2 feet from the edge of an open excavation, and otherwise retained to prevent loose material from falling into the excavation.

- Protection such as guardrails, barricades or covers must be in place to protect personnel from possible falls into open excavations, pits, wells and shafts.

- Work tasks will be designed to limit the number of personnel required to enter any excavation. All tasks that can be completed remotely from outside the excavation (such as soil sampling) will be conducted in such a manner.

- Personnel will not be allowed to enter any excavation unless adequate protective systems and procedures are utilized to prevent accidents and injury.

- All excavations over four feet in depth shall be provided with a stairway, ladder, ramp, or other safe means of egress so as to require no more than 25 feet of lateral travel. As deemed necessary by the competent person, excavations less than 4 feet in depth will be provided with a stairway, ladder, ramp, or other safe means of egress so as to require no more than 25 feet of lateral travel.

5.2 Excavations Requiring Protective Systems

This section defines excavations that require protective systems.

- All excavations into which employees will enter, regardless of depth, where the potential for cave-in exists.
- Any excavation over 4 feet in depth into which employees will enter that is not entirely in stable rock as defined in this procedure.
- Any excavation near a structure, (e.g. foundations, piers, footers, walls, sidewalks, tanks, roadways, etc.), as required by the registered professional engineer reviewing the stability of the excavation and the structure.
- All excavations over 20 feet in depth must be designed by a registered professional engineer regardless of whether personnel will enter it or not.
- All excavations with adjacent structures which are located a distance less than 6 times the depth of the excavation away shall be reviewed by a registered professional engineer to determine if the stability of the structure will be affected by the excavation.
- Support systems for an adjacent structure must be designed by a registered professional engineer.

5.3 Selection and Use of Protective Systems

5.3.1 Shoring or Shielding

- If shoring or shielding is selected as the protective system for an excavation, soil classification in accordance with 1926 Subpart P Appendix A (see Section 9 of this procedure) is required.
- One of the following options must be utilized for all excavations which will be shored or shielded.
    - Timber shoring as specified in 1926 Subpart P Appendix C must be utilized
    - Hydraulic shoring, trench jacks, air shores, or shields as required in 1926.652 (c)(2) must be utilized following the system manufacturer's data
    - A system which follows other tabulated data (approved by a registered professional engineer) must be utilized
    - The excavation must be designed by a registered professional engineer

5.3.2 Sloping

- If sloping is selected as the protective system for an excavation, the excavation sides must be sloped at a maximum of 34 degrees (1.5 Horizontal: 1 Vertical), unless the procedure listed above is followed.

- Soil classification in accordance with Section 10 of this procedure) is required for all excavations with sides which will be sloped greater than 34° (1.5 Horizontal: 1 Vertical). If it will be sloped greater than 34°, the one of the following options must be utilized:

    - Option 1 - assume Type C and slope 1.5/1 - probably the most common and preferred method for us

    - Option 2 - classify soil according to the standard and use Type A/B sloping requirements

    - Option 3 – use other tabulated data with PE approval

    - Option 4 – PE approval of sloping/benching design

5.4 Atmospheric Testing for Entry

Any excavation over 4 feet in depth with a potential for hazardous contaminants or oxygen deficiency must be tested for hazardous atmospheres prior to and during activities involving entry. After atmospheric testing, if the area is found to be oxygen deficient or a hazardous atmosphere exists or could exist a confined space permit must be obtained if the area will be entered.

The site designated "competent person" will document initial and periodic air monitoring results for all activities requiring entry into the excavation. All atmospheric testing of excavations must be conducted in the following sequence and meet the following air quality criteria.

- Oxygen content must be 19.5 to 23.5%

- Combustible gas or vapor must not exceed 10% of its lower explosive limit (LEL)

- Toxic air contaminant levels must not exceed 50% of the PEL or TLV for the specific contaminant whichever is lower

- Carbon monoxide must not exceed 10 ppm for a 5 minute average or ceiling value of 25 ppm

- Hydrogen sulfide must not exceed 0.5 ppm

5.5 Location of Underground/Overhead Utilities

- The competent person and the project manager shall both verify that local underground facilities location/protection agencies are notified within the required time frame prior to the initiation of excavation activities and meet all requirements in the ARCADIS Utility Location Policy and Procedure ARC HSFS019.

- Prior to initiation of excavation or trenching operations the competent person shall verify that all utilities have been located.

5.6 Daily/Periodic Inspections

- Prior to initiation of daily excavation or trenching operations the competent person shall complete a daily inspection of the excavation.

- During excavation or trenching operations the competent person shall complete a periodic inspection after any event (e.g., thunderstorm, vibration, excessive drying) that may affect excavation stability.

- The competent person shall complete the daily/periodic inspection checklist (A copy of the checklist is attached to this Policy as Exhibit A– Subcontractors must complete an equivalent inspection form) is completed for each inspection of excavation and trenching activities.

5.7 Soil Classification for Selection of Protective Systems

5.7.1 Soil Classification

This section describes a method of classifying soil and rock deposits based on site and environmental conditions, and on the structure and composition of the earth deposits. This section contains definitions, sets forth requirements, and describes acceptable visual and manual tests for use in classifying soils.

This section applies when a sloping, benching or shoring system is utilized as a method of protection for employees from cave-ins.

5.7.2 Soil Classification Definitions

5.7.2.1 Types/Classes of Soil

Type/Class A Soils are cohesive soils with an unconfined, compressive strength of 1.5 ton per square foot (tsf) (144kPa) or greater. Examples of cohesive soils are: Clay, silty clay, sandy clay, clay loam and in some cases, silty clay loam and sandy clay loam. Cemented soils such as caliche and hardpan are also considered Type A. However, no soil is Type A if the following apply.

- The soil is fissured

- The soil is subject to vibration from heavy traffic, pile driving, or similar effects
- The soil has been previously disturbed
- The soil is part of a sloped, layered system where the layers dip into the excavation on a slope of four horizontal to one vertical (4 Horizontal:1 Vertical) or greater
- The material is subject to other factors that would require it to be classified as a less stable material

5.7.2.1.1 Type Class B Soils

- Cohesive soils with an unconfined compressive strength greater than 0.5 tsf (48 kPa) but less than 1.5 tsf (144 kPa)
- Granular cohesionless soils including angular gravel (similar to crushed rock), silt, silt loam, sandy loam and, in some cases, silty clay loam and sandy clay loam
- Previously disturbed soils except those which would otherwise be classed as Type C soil
- Soil that meets the unconfined compressive strength or cementation requirements for Type A, but is fissured or subject to vibration
- Dry rock that is not stable
- Material that is part of a sloped, layered system where the layers dip into the excavation on a slope less steep than four horizontal to one vertical (4 Horizontal:1 Vertical), but only if the material would otherwise be classified as Type B

5.7.2.1.2 Type/Class C Soils

- Cohesive soil with an unconfined compressive strength of 0.5 tsf (48 kPa) or less
- Granular soils including gravel, sand, and loamy sand
- Submerged soil or soil from which water is freely seeping
- Submerged rock that is not stable
- Material in a sloped, layered system where the layers dip into the excavation or a slope of four horizontal to one vertical (4 Horizontal:1 Vertical) or steeper

5.7.2.2 Methods for Classifying Soils

Each soil and rock deposit shall be classified by a competent person as Stable Rock, Type A, Type B, or Type C in accordance with the definitions set forth in this section. The classification of the deposits shall be made based on the results of at least one visual and at least one manual analysis conducted by a competent person using tests described below, or in other recognized methods of soil classification and testing such as those adopted by the American Society for Testing Materials, or the U.S. Department of Agriculture textural classification system.

The visual and manual analyses, such as those noted as being acceptable in this section, shall be designed and conducted to provide sufficient quantitative and qualitative information as may be necessary to identify properly the properties, factors, and conditions affecting the classification of the deposits. Visual analysis is conducted to determine qualitative information regarding the excavation site in general, the soil adjacent to the excavation, the soil forming the sides of the open excavation, and the soil taken as samples from excavated material.

Observe the following:

- Samples of soil that are excavated and soil in the sides of the excavation. Estimate the range of particle sizes and the relative amounts of the particle sizes. Soil that is primarily composed of fine grained material is cohesive material. Soil composed primarily of coarse grained sand or gravel is granular material.

- Soil as it is excavated. Soil that remains in clumps when excavated is cohesive. Soil that breaks up easily and does not stay in clumps is granular.

- The side of the open excavation and the surface area adjacent to the excavation. Crack like openings such as tension cracks could indicate fissured material. If chunks of soil spall off a vertical side, the soil could be fissured. Small spalls are evidence of moving ground and are indications of potentially hazardous situations.

- The area adjacent to the excavation and the excavation itself for evidence of existing utility and other underground structures, and to identify previously disturbed soil.

- The open side of the excavation to identify layered systems. Examine layered systems to identify if the layers slope toward the excavation. Estimate the degree of slope of the layers.

- The area adjacent to the excavation and the sides of the opened excavation for evidence of surface water, water seeping from the sides of the excavation, or the location of the level of the water table.

- The area adjacent to the excavation and the area within the excavation for sources of vibration that may affect the stability of the excavation face.

Manual analysis of soil samples is conducted to determine quantitative as well as qualitative properties of soil and to provide more information in order to classify soil properly.

5.7.2.3 Classifications

A. Plasticity. Mold a moist or wet sample of soil into a ball and attempt to roll it into threads as thin as 1/8 inch in diameter. Cohesive material can be successfully rolled into threads without crumbling. For example, if at least a two inch (50 mm) length of 1/8 inch thread can be held on one end without tearing, the soil is cohesive.

B. Dry strength. If the soil is dry and crumbles on its own or with moderate pressure into individual grains or fine powder, it is granular (any combination of gravel, sand, or silt). If the soil is dry and falls into clumps which break up into smaller clumps, but the smaller clumps can only be broken up with difficulty, it may be clay in any combination with gravel, sand or silt. If the dry soil breaks into clumps which do not break up into small clumps and which can only be broken with difficulty, and there is no visual indication the soil is fissured, the soil may be considered unfissured.

C. Thumb penetration. The thumb penetration test can be used to estimate the unconfined compressive strength of cohesive soils. Type A soils with an unconfined compressive strength of 1.5 tsf can be readily indented by the thumb; however, they can be penetrated by the thumb only with very great effort. Type C soils with an unconfined compressive strength of 0.5 tsf can be easily penetrated several inches by the thumb, and can be molded by light finger pressure. This test should be conducted on an undisturbed soil sample, such as a large clump of spoil, as soon as practicable after excavation to keep to a minimum the effects of exposure to drying influences. If the excavation is later exposed to wetting influences (rain, flooding), the classification of the soil must be changed accordingly.

D. Other strength tests. Estimates of unconfined compressive strength of soils can also be obtained by use of a pocket penetrometer or by using a hand operated shearvane.

E. Drying test. The basic purpose of the drying test is to differentiate between cohesive material with fissures, unfissured cohesive material, and granular material. The procedure for the drying test involves drying a sample of soil that is approximately one inch thick (2.54 cm) and six inches (15.24 cm) in diameter until it is thoroughly dry:

    1. If the sample develops cracks as it dries, significant fissures are indicated.

2. Samples that dry without cracking are to be broken by hand. If considerable force is necessary to break a sample, the soil has significant cohesive material content. The soil can be classified as an unfissured cohesive material and the unconfined compressive strength should be determined by using the thumb penetration or other test.

5.7.2.4 If a sample breaks easily by hand, it is either a fissured cohesive material or a granular material. To distinguish between the two, pulverize the dried clumps of the sample by hand or by stepping on them. If the clumps do not pulverize easily, the material is cohesive with fissures. If they pulverize easily into very small fragments, the material is granular.

5.7.2.5 Layered system

A layered system shall be classified in accordance with its weakest layer. Each layer may be classified individually where a more stable layer lies under a less stable layer.

5.7.2.6 Reclassifying Soils

A layered system shall be classified in accordance with its weakest layer. Each layer may be classified individually where a more stable layer lies under a less stable layer.

In most instances the ARCADIS designated Excavation/Trenching Competent person will assume Type C soil, unless they have conclusive data to validate Type A or B.

5.7.2.7 Excavation Construction Based on Soil Type

The Maximum allowable slope means the steepest incline of an excavation face that is acceptable for the most favorable site conditions as protection against cave-ins, and is expressed as the ratio of horizontal distance to vertical rise (H:V). Short-term exposure means a period of time less than or equal to 24 hours that an excavation is open. Soil and rock deposits must be classified in accordance with Appendix A to Subpart P of Part 1926. The maximum allowable slope for a soil or rock deposit must be determined from the table provided below. The actual slope must not be steeper than the maximum allowable slope. The actual slope must be less steep than the maximum allowable slope, when there are signs of distress. If that situation occurs, the slope must be cut back to an actual slope which is at least horizontal to one vertical (1/2H:1V) less steep than the maximum allowable slope. When surcharge loads from stored material or equipment, operating equipment, or traffic are present, a competent person must determine the degree to which the actual slope must be reduced below the maximum allowable slope, and must assure that such reduction is achieved. Surcharge loads from adjacent structures must be evaluated in accordance with 1926.651(I). Configurations of sloping and benching systems must be in accordance with 29 CFR 1926 Subpart P, Appendix B.

EXCAVATION SLOPE TABLE 2 29 CFR 1926 SUBPART P APPENDIX B MAXIMUM ALLOWABLE SLOPES	
Soil or Rock Type	**Maximum Allowable Slopes (H:V)[1] for Excavations Less Than 20 Feet Deep[2]**
Stable Rock	Vertical (90 degrees)
Type A[3]	¾:1 (53 degrees)
Type B	1:1 (45 degrees)
Type C	1:½ (34 degrees)

1. Numbers shown in parentheses next to maximum allowable slopes are angles expressed in degrees from the horizontal. Angles have been rounded off.
2. Sloping or benching for excavations greater than 20 feet deep must be designed by a registered professional engineer.
3. A short-term maximum allowable slope of 1/2H:1V (63 degrees) is allowed in excavations in Type A soil that are 12 feet (3.67 m) or less in depth. Short-term maximum allowable slopes for excavations greater than 12 feet (3.67 m) in depth must be 3/4H:1V (53 degrees).

6. TRAINING

6.1 Project - Specific Training

All staff working on a site where trenching and excavation activities are being conducted by ARCADIS or its subcontractors will be provided with site orientation on excavation projects shall include a discussion of the following:

- Site excavation hazards and procedures
- Requirements for conducting activities remotely whenever possible
- Client requirements and procedures for excavation activities
- This Procedure

Daily Safety Meetings on projects involving excavation activities shall include a discussion of:

- Site excavation hazards and procedures
- Requirements for conducting activities remotely whenever possible
- Client requirements and procedures for excavation activities
- This Excavation and Trenching Procedure, as appropriate

6.2 Additional Training

Besides site orientation training, additional training will be provided as follows based on the employee's activities:

- All employees who work in the area of potential excavation/trenching sites will receive awareness level training as provided and/or approved by ARCADIS Corporate H&S in order to recognize and to understand the hazards.

- Entrants, Attendants, and Entrant Supervisors will receive additional training as approved by Corporate H&S. This training will be classroom in nature and cover the details of trenching and excavation hazards and controls

- Qualified Competent Persons will be provided training as follows:

  In order to be assigned duties as a competent person with respect to excavation and trenching, in addition to the criteria noted in Exhibit 1, personnel must complete an ARCADIS approved training course or an equivalent course approved by Corporate Health and Safety including but not limited to the following topics:

  - Introduction to trenches and excavations
    - Definition of trenches and excavations
    - General requirements of OSHA 29 CFR 1926 Subpart P
  - Responsibilities and requirements of a competent person
    - Necessary authority
    - When other/outside resources may be necessary
  - Hazard Identification and Assessment
    - Cave-In Hazards including nearby structures
    - Underground utilities
    - Confined Space
    - Hazardous atmospheres
    - Water accumulation
    - Vehicular traffic and falling loads
  - Hazard controls
    - Soil analysis and testing (visual and manual
    - Protective systems

        - Shoring
        - Sloping
        - Shielding
        - Benching
    - Personal protective equipment
    - Utility location
    - Atmospheric testing
    - Water drainage and pumping
    - Site housekeeping and management
        - Spoils
        - Traffic control
        - Overhead hazard protection
    - Communications
        - Verbal
        - Signaling
    - Access and egress
- Emergency Procedures
    - Warning signs of cave-in
    - Evacuation procedures
    - Rescue
- Inspections
    - Checklists
    - Potential deficiencies

All training provided must be reviewed and approved by Corporate Health & Safety and will be managed through the Training Team.

Documentation of training certification received by attendance at any training course including externally provided training courses will be kept by the employee with copies provided to the Training Team

7. REFERENCES

7.1 ARCADIS Health and Safety Procedure ARC HSFS010– Health and Safety Planning

7.2 ARCADIS Health and Safety Procedure ARC HSFS004 – Control of Hazardous Energy (Lockout/Tagout)

7.3 ARCADIS Utility Clearance Policy and Procedure ARC HSF019

7.4 ARCADIS Confined Space Policy and Procedure ARC HSF003

7.5 OSHA 29 CFR Part 1926 Subpart P - Excavations

8. RECORDS

8.1 Training records will be kept by the individual employee with copies of such certificates kept by the Training Team. Training dates and times will be kept by the Training Team.

8.2 Completed clearance forms and checklists will be kept in the project files with copies available for Corporate H&S review.

8.3 Copies of all HASPs that document excavation trenching procedures will be kept in the project files.

9. APPROVALS AND HISTORY OF CHANGE

Approved By: Michael Thomas, CIH, CPEA

History of Change

Revision Date	Revision Number	Reason for change
12 May 2008	01	Original document
13 June 2008	02	Modified Section 5.1 – 4th bullet related to structural ramps. Modified Section 5.2 to designate a 6x factor for structural integrity of structures near the excavation. Revised Exhibit 1 to modify the definition of a Competent person
9 January 2009	03	Cleaned up definitions, deleted training requirements from Section 5.0 and moved them to Section 6.0, modified purpose statement

Exhibit 1 – Definitions

Attendant is a trained qualified individual stationed outside the excavation whose duty is to monitor authorized entrants inside the excavation or trench and have a means of communication with the designated rescue services.

Benching/Benching system means a method of protecting employees from cave-ins by excavating the sides of an excavation to form one or a series of horizontal levels or steps, usually with vertical or near-vertical surfaces between levels.

Cave-in means the separation of a mass of soil or rock material from the side of an excavation, or the loss of soil from under a trench shield or support system, and its sudden movement into the excavation, either by falling or sliding, in sufficient quantity so that it could entrap, bury or otherwise injure and immobilize a person.

Competent person means one who, through education, training, and/or experience, is capable of identifying existing and predictable hazards or working conditions which are unsanitary, hazardous, or dangerous to employees and who has authorization to take prompt corrective measures to eliminate them. All ARCADIS employee's, must meet the following minimum requirements to be considered a Competent Person:

- Be nominated to the appropriate Division H&S Director by their supervisor or project manager to be considered as a competent person. The nomination will include the submittal of various documentation that describes why the person should be nominated and to provide evidence that they have met the criteria listed below.
- Be jointly approved by the appropriate Division H&S Director and the appropriate Practice/Client H&S Manager or resource.
- Attend ARCADIS Competent Person training or an equivalent course approved by Corporate Health and Safety
- Have a minimum of 1 year of supervised field experience and approval from their supervisor to fill the role of competent person
- If on an Environmental project where HAZWOPER training is required by ARCADIS, completed a 40 Hour HAZWOPER and HAZWOPER Supervisor training course and be current on their annual 8 Hour refresher
- Attended a 10 or 30 Hour OSHA Construction Safety Course or have equivalent training to that provided by the 10 or 30 hour course
- If a hazardous atmosphere is present, or there is limited entry or exit and the excavation or trench must be entered as a confined space, the person must also be Confined Space trained and authorized as per the ARCADIS Confined Space procedure ARC HSFS003

Excavation means any man-made cut, cavity, trench, or depression in an earth surface formed by earth removal into which a person can bodily enter. **Entry** constitutes the act by which an employee proceeds into an excavation or trench. Consideration of hazards, especially cave-ins and fall protection must still be considered and accounted for when equipment or personnel are near an excavation or trench, even if personnel will not be entering.

Entrants are employee's who are trained and authorized to enter a trench or excavation. Entrants must have attended a Qualified Excavation Training course offered or approved by Corporate Health and Safety.

Failure means the breakage, displacement, or permanent deformation of a structural member or connection so as to reduce its structural integrity and its supportive capabilities.

Hazardous Atmosphere is an atmosphere which exposes employees to a risk of death, incapacitation, injury, or acute illness from one or more of the following:

- An atmospheric concentration of any substance in excess of 50% of its established permissible exposure limit (PEL); or its assigned threshold limit value (TLV) or other value listed on the Material Safety Data Sheet (MSDS) for the chemical constituent, whichever is lower.
- A flammable gas, vapor, or mist in excess of 10% of its lower explosive limit (LEL).
- An airborne combustible dust at a concentration that obscures vision at a distance of 5 feet or less.
- An atmospheric oxygen concentration below 19.5% (oxygen-deficient atmosphere) or above 23.5% (oxygen-enriched atmosphere).
- An atmosphere which is immediately dangerous to life and health.

Immediately Danger to Life and Health (IDLH) means any condition which poses an immediate threat to loss of life; may result in irreversible or immediate-severe health effects; may result in eye damage, irritation, or other conditions which could impair escape from the space.

Protective system means a method of protecting employees from cave-ins, from material that could fall or roll from an excavation face or into an excavation, or from the collapse of adjacent structures. Protective systems include support systems, sloping and benching systems, shield systems and other systems that provide protection.

Ramp means an inclined walking or working surface that is used to gain access to one point from another, and is constructed from earth or from structural materials such as steel or wood.

Registered Professional Engineer means a person who is registered as a professional engineer in the state where the work is to be performed. However, a professional engineer, registered in any state is deemed to be a "registered professional engineer" within the meaning of this standard when approving designs for "manufactured protective systems" or "tabulated data" to be used in interstate commerce. To oversee an excavation/trench activity the PE must have experience with and expertise in excavation, soil and stability considerations.

Sheeting means the members of a shoring system that retain the earth in position and in turn are supported by other members of the shoring system.

Shield (Shield system) means a structure that is able to withstand the forces imposed on it by a cave-in and thereby protect employees within the structure. Shields can be permanent structures or can be designed to be portable and moved along as work progresses. Additionally, shield can be either pre-manufactured or job-built in accordance with 1926.652 (c)(3) or (c)(4). Shields used in trenches are usually referred to as "trench boxes" or "trench shields".

Shoring (Shoring system) means a structure such as a metal hydraulic, mechanical or timber shoring system that supports the sides of an excavation and which is designed to prevent cave-ins.

Sloping (Sloping system) means a method of protecting employees from cave-ins by excavating to form sides of an excavation that are inclined away from the excavation so as to prevent cave-ins. The angle of incline required to prevent a cave-in varies with differences in such factors as the soil type, environmental conditions of exposure, and application of surcharge loads.

Stable rock means natural solid mineral material that can be excavated with vertical sides and will remain intact while exposed. Unstable rock is considered to be stable when the rock material on the side or sides of the excavation is secured against caving-in or movement by rock bolts or by another protective system that has been designed by a registered professional engineer.

Support system means a structure such as underpinning, bracing, or shoring, which provides support to an adjacent structure, underground installation, or the sides of an excavation.

Trench means a narrow excavation (in relation to its length) made below the surface of the ground to which a person can bodily enter. In general, the depth is greater than the width, but the width of a trench (measured at the bottom) is not greater than 15 feet (4.6 meters). If forms or other structures are installed or constructed in an excavation so as to reduce the dimension measured from the forms or structure to the side of the excavation to 15 feet (4.6 meters) or less (measured at the bottom of the excavation), the excavation is considered to be a trench.

Cemented soil means a soil in which the particles are held together by a chemical agent, such as calcium carbonate, such that a hand size sample cannot be crushed into powder or individual soil particles by finger pressure.

Cohesive soil means clay (fine grained soil), or soil with a high clay content, which has cohesive strength. Cohesive soil does not crumble, can be excavated with vertical sides, and is plastic when moist. Cohesive soil is hard to break up when dry, and exhibits significant cohesion when submerged. Cohesive soils include clayey silt, sandy clay, silty clay, clay and organic clay.

Dry soil means soil that does not exhibit visible signs of moisture content.

Fissured means a soil material that has a tendency to break along definite planes of fracture with little resistance, or a material that exhibits open cracks, such as tension cracks, in an exposed surface.

Granular soil means gravel, sand, or silt (coarse grained soil) with little or no clay content. Granular soil has no cohesive strength. Some moist granular soils exhibit apparent cohesion. Granular soil cannot be molded when moist and crumbles easily when dry.

Layered system means two or more distinctly different soil or rock types arranged in layers. Micaceous seams or weakened planes in rock or shale are considered layered.

Moist soil means a condition in which a soil looks and feels damp. Moist cohesive soil can easily be shaped into a ball and rolled into small diameter threads before crumbling. Moist granular soil that contains some cohesive material will exhibit signs of cohesion between particles.

Plastic means a property of a soil which allows the soil to be deformed or molded without cracking, or appreciable volume change.

Saturated soil means a soil in which the voids are filled with water. Saturation does not require flow. Saturation, or near saturation, is necessary for the proper use of instruments such as a pocket penetrometer or sheer vane.

Soil classification system means, for the purpose of this procedure, a method of categorizing soil and rock deposits in a hierarchy of Stable Rock, Type A, Type B and Type C, in decreasing order of stability. The categories are determined based on an analysis of the properties and performance characteristics of the deposits and the characteristics of the deposits and the environmental conditions of exposure.

Submerged soil means soil which is underwater or is free seeping.

Unconfined compressive strength means the load per unit area at which a soil will fail in compression. It can be determined by laboratory testing, or estimated in the field using a pocket penetrometer, by thumb penetration tests, and other methods.

Wet soil means soil that contains significantly more moisture than moist soil, but in such a range of values that cohesive material will slump or begin to flow when vibrated. Granular material that would exhibit cohesive properties when moist will lose those cohesive properties when wet.

Exhibit 2 – Daily / Periodic Excavation Inspection Checklist

ARCADIS		**Daily / Periodic Excavation Inspection Checklist**
Project Name:		**Date / Time:**
Project Number:		**Location:**
Prepared By:		**Project Manager:**

This checklist must be completed for all excavations. It documents that daily and post-event / periodic inspections are conducted.

Soil Classified As: Stable Rock Type A Type B Type C

Soil Classified On: By:

Type of Protective System in Use: Sloping Shoring Other _____

Description:

Inspection Item	YES	NO	Comments
Has the ARCADIS Utility Clearance Procedure been completed?			
Are underground installations protected from damage?			
Are adequate means of entry / exit available in the excavation – at least every 25 feet?			
If exposed to traffic, are personnel wearing reflective vests and adequate barriers/traffic controls installed?			
Do barriers exist to prevent equipment from rolling into the excavation?			
Was air monitoring conducted prior to and during excavation entry?			
Was the stability of adjacent structures reviewed by a registered P.E.?			
Are spoil piles at least 2 feet from the excavation edge?			
Is fall protection in use near excavations deeper than 6 feet?			
Are work tasks completed remotely if feasible?			
Is a protective system in place and in good repair?			
Is emergency rescue (lifeline / body harness) equipment used due to potential atmospheric hazard?			
Is excavation exposed to vibration?			
Are employees protected from falling / elevated material?			
Is soil classification adequate for current environmental / weather conditions?			
Do portable ladders extend at least 4 feet above the excavation?			
Are portable ladders or ramps secured in place?			
Have all personnel attended safety meeting on excavation hazards?			
Are support systems for adjacent structures in place?			
Is the excavation free from standing water?			
Is water control and diversion of surface runoff adequate?			
Are employees wearing required protective equipment?			
ARCADIS Excavation Competent Person:			**Date/Time:**

ARCADIS
Infrastructure, environment, facilities

Imagine the result

Hazardous Materials Handling

Rev. #: 0

Rev Date: August 20, 2003

Approval Signatures

Prepared by: _____ Date: _____

Reviewed by: _____ Date: _____
(Technical Expert)

Reviewed by: _____ Date: _____
(Project Manager)

I. Scope and Application

Selected materials collected and shipped to analytical laboratories during this project may be subject to the requirements of the United States Department of Transportation (DOT) Hazardous Materials Regulations (HMR) and the International Air Transport Association (IATA) Dangerous Goods Regulations (DGR).

II. Personnel Qualifications

To be completed by Preparer and reviewed by Technical Expert.

III. Equipment List

To be completed by Preparer and reviewed by Technical Expert.

IV. Cautions

To be completed by Preparer and reviewed by Technical Expert.

V. Health and Safety Considerations

To be completed by Preparer and reviewed by Technical Expert.

VI. Procedures

The sample shipment procedure consists of 11 steps, as summarized below.

1. Determine the proper shipping name and material classification for the material. Based on available information and characteristics of the material, determine the classification of the material into the appropriate Dangerous Goods/Hazardous Materials Class. Classification into one or more of the following classes will be made:

   Class 1 Explosives.
   Class 2 Gases.
   Class 3 Flammable Liquids.
   Class 4 Flammable Solids - substances liable to spontaneous combustion; substances which, in contact with water, emit flammable gases.
   Class 5 Oxidizing Substances and Organic Peroxides.
   Class 6 Toxic and Infectious Substances.
   Class 7 Radioactive Material.
   Class 8 Corrosives.

Class 9 Miscellaneous Dangerous Goods (includes Polychlorinated Biphenyls).

2. Identify shipping name and shipping requirements in List of Dangerous Goods Hazardous Materials table. Based on the classification of the material and the proper shipping name for the material, the specific entry in the List of Dangerous Goods (Section 4 of the IATA DGR) or DOT Hazardous Materials table (HMR 172.101) can be located, and the specific shipping requirements for the sample can be identified.

3. Determine mode of transport and carrier. To promote compliance with specific modal and operator requirements, the selected means of transport and the carrier must be identified.

4. Determine operator-/carrier-specific requirements. Review Section 2 of the IATA DGR and DOT HMR to determine carrier-specific requirements (e.g., Federal Express, Delta Airlines) and review the List of Dangerous Goods/DOT Hazardous Materials table for model-specific restrictions (e.g., cargo aircraft, passenger aircraft).

5. Define quantity limitations for materials to be shipped. Review the List of Dangerous Goods (Section 4 of the IATA DGR) or DOT Hazardous Materials table (HMR 172.101) entry for the material being shipped and identify specific quantity limitations for the material (inner packaging limit/outer packaging limit).

6. Identify packing procedure. Review the List of Dangerous Goods/DOT Hazardous Materials table (HMR 172.101) for the material and identify specific packing instructions for the material.

7. Select packaging components and package material. Corresponding numbered packing instructions in Section 5 of the IATA DGR provide acceptable packaging configurations for each dangerous good. DOT HMR (173) provides acceptable packaging configurations for hazardous materials to be shipped via domestic ground transportation.

8. Pack material and verify packaging restrictions, specifications, and quantities. Pack material in appropriate inner and outer packaging in accordance with numbered packing instructions in Section 5 of the IATA DGR or DOT HMR (173). Verify that packaging restrictions, specifications, and maximum package quantities meet the requirements of the packing instructions.

9. Implement marking and labeling requirements for package. Prior to shipping, the completed package must be marked and labeled in accordance with Section 7 of the IATA DGR or DOT HMR. Markings and labels may include, but not be limited to: the shipper's name/identification, proper shipping name, UN identification number, hazard class, subsidiary hazards, and package orientation.

10. Complete Shipper's Declaration for Dangerous Goods/Hazardous Materials Shipping Papers. An executed Shipper's Declaration for Dangerous Goods/Hazardous Shipping Papers and/or carrier-specific airbill (for air transport) must be presented at consignment of shipment. The Shipper's Declaration for Dangerous Goods may include, but not be limited to: transport details, shipper's name/identification, nature and quantity of dangerous goods, proper shipping name, UN identification number, hazard class, packing group, subsidiary hazards, packing instruction number, type of packing, authorization, emergency contact number, and additional handling information.

11. Record acceptance of shipment by dangerous goods transporter. Upon consignment of the shipment to a dangerous goods carrier, a completed copy of the Shipper's Declaration for Dangerous Goods/Hazardous Materials Shipping Papers will be maintained by the shipper and copies provided to any emergency contacts identified on the declaration.

VII. Waste Management

To be completed by Preparer and reviewed by Technical Expert.

VIII. Data Recording and Management

To be completed by Preparer and reviewed by Technical Expert.

IX. Quality Assurance

To be completed by Preparer and reviewed by Technical Expert.

X. References

To be completed by Preparer and reviewed by Technical Expert.

ARCADIS
Infrastructure, environment, facilities

Imagine the result

Field Log Book Entries

Rev. #: 0

Rev Date: 11 August 2009

Approval Signatures

Prepared by: Andrew Kanik Date: 8/11/09

Reviewed by: Michael J. Heffell Date: 8/11/09
(Technical Expert)

I. Scope and Application

This ARCADIS Standard Operating Procedure covers the entries needed in a field log book for environmental investigations.

This SOP does not address all of the entries that may be needed for a specific project, and does not address health and safety, equipment decontamination, field parameter measurements, sample preservation, chain-of-custody, or laboratory analysis. For direction on requirements in these areas, refer to other ARCADIS SOPs, the project work plans including the quality assurance project plan, sampling plan, and health and safety plan, as appropriate.

II. Personnel Qualifications

ARCADIS personnel participating in fieldwork and making entries into the field log book should have a minimum of one (1) year of field experience (or be under the supervision and accompanied in the field by someone who does) and current health and safety training including 40-hour HAZWOPER training, site supervisor training, site-specific training, first aid, and CPR, as needed. Field personnel will also be compliant with client-specific training requirements. In addition, ARCADIS field sampling personnel will be versed in the relevant SOPs and posses the required skills and experience necessary to successfully complete the desired field work.

III. Equipment List

- Field Log Book
- Ball point (medium point) pen with blue or black ink (black preferred). A fine point Sharpie pen may be used if the ink does not bleed through the page and become visible on back side of the page. If weather conditions prevent the use of a pen, indicate so in the log and use an alternate writing instrument .
- Zip-lock baggie or other weather-proof container to protect the field log book from the elements.

IV. Cautions

All entries in the field log must be legible and archivable. Do not leave the field log book exposed to the elements or other conditions that might moisten the pages and smear/dissolve the entries. When not in the field, the log book should be stored in a location that is easily accessible to field crews.

V. Health and Safety Considerations

ARCADIS field personnel will be familiar and compliant with Client-specific health and safety requirements.

VI. Procedure

- Print legibly. Do not use cursive writing.
- The name of the project, project number and project location should be written in indelible ink on the outside of the field log book.
- On the inside of the front cover, write "If Found, Please Return to ARCADIS" and include the appropriate address and phone number, the name of the person to which the book is assigned, and the name of the project manager.
- Reserve the first page of the book for a Table of Contents.
- Reserve the last five (5) pages of the book for important contacts, notes, reminders, etc.
- Each day of field work, the following should be recorded in the field log book as applicable:

    a) Project Name

    b) Date and time arrived

    c) Work Site Location

    d) Names of people on-site related to the project including ARCADIS employees, visitors, subcontractor employees, agency personnel, client representative, etc.

    e) Describe the work to be performed briefly, and list the equipment on-site

    f) Indicate the health and safety (H&S) level to be used

    g) Record instrument calibrations and checks

    h) Record time and general content of H&S briefing

    i) Describe the weather conditions, including temperature, precipitation, and wind speed and direction

    j) List periodic time entries in the far left hand column of each page

    k) Minimize unused space on each page

- The tailgate meeting must be recorded in the log book and the tailgate form completed. If H&S monitoring is performed, record the time and results of initial and followup monitoring.

- Note factual observations including collection of QA/QC samples, delays, well damage, accidents, work plan deviations, instrument problems, and problem resolutions.

- Describe work performed and how documented such as photographs, sample core logs, water sampling logs, etc.

- Describe bases for field decisions including pertinent conversations with visitors, regulators, or project personnel.

- Note final instrument calibrations and checks.

- Sign the log book at the end of each day at a minimum. Draw a line to the end of the page to indicate no further entries on that page. Sign the bottom of each page if possible.

- If an entry to the log book is changed, strike out the deleted text or item with a single line such that the entry remains legible, and initial and date the change. Such changes should only be made by the same person that made the initial entry.

- Field log book entries must be made in the field at the site, not at a later time at a different location. Supplemental entries to the log book may be made at a later date. The supplemental entry must be clearly identified as such and the entry must be signed and dated as described in this SOP.

- Problems noted in the field log book must be brought to the attention of the project manager and task manager in a timely fashion. Problems may be reported in person, on the telephone, or in a written daily log form. If daily logs are prepared and you will not be able to personally give the daily log to the project manager, send the daily log via FAX or overnight courier to the project manager and task manager.

VII. Waste Management

Investigation-derived waste will be managed as described in the Investigation-Derived Waste Handling and Storage SOP. A drum/waste inventory should be maintained on a pre-designated page in the field log book.

VIII. Data Recording and Management

Each page of the field log book should be scanned for electronic/digital archiving at periodic intervals. This will ensure that copies of the field notes are available in the event the field book is lost or damaged, and that field data can be easily disseminated to others without the risk of physically sending the field log book. Field log books that are full should be archived with the project files, and readily retrievable.

IX. Quality Assurance

Be mindful that the field log book may be produced in court. All entries should be legible (as discussed above). Entries should also be in English, unless working in a country where English is not the predominant language or you are directed otherwise by the project manager.

X. References

Not Applicable

SOP 21: Hazardous Atmosphere Equipment Enclosure Entry

1. Through daily system monitoring, observation of the equipment enclosure oxygen sensor, hydrogen sulfide (H2S) sensor, volatile organic compound (VOC's) sensor, and potentially explosive atmosphere (LEL) sensor, the presence of a hazardous environment will be determined. The potential hazardous environments include an oxygen enriched environment, an oxygen deficient environment, elevated concentrations of H2S, elevated concentrations of VOC's, and a potentially explosive atmosphere.

2. If hazardous atmosphere or critical alarm strobes are illuminated upon arrival, stop work and notify the OMM Engineer immediately and the entire remediation system will be shut down remotely. Standard Operating Procedure (SOP) 22 presents the procedures that will be followed to enter the building and further investigate the origin of the hazardous atmosphere.

3. Prior to system enclosure entry, contact the Operation, Maintenance, and Monitoring (OMM) Engineer who can access the system remotely to determine the real-time concentration and presence of any potential contaminants in the enclosure.

4. The following minimum personal protective equipment requirements (Level D) will be worn before entering the equipment enclosure: steel-toe boots, safety glasses, reflective vest, and hard hat. Additionally, a H2S personal dosimeter will be utilized at all times while inside the enclosure. The H2S dosimeters are located in the entrance doorway.

5. If the atmosphere is unsafe anywhere in the enclosure, stop work, exit the enclosure, and notify the OMM Engineer Immediately.

6. Enter the equipment enclosure and check the reading on the oxygen, H2S, VOC, and LEL sensors to see if it is reading an appropriate value. A value that does not make sense (an extreme high or low value) may indicate that the sensor requires calibration or a component of the sensor is defective. Exposure limits are noted on the table below.

7. Be aware of any unusual odors. If you begin to feel faint at any point, immediately evacuate the building.

8. Verify that the lids of T-200 and T-300 are securely closed upon entering the equipment enclosure. If the lids are not securely closed, fugitive oxygen, dissolved VOC's in the groundwater, or other gases generated from bioactivity and dissolved in the extracted groundwater may have entered into the equipment enclosure instead of being vented outside as designed.

9. Verify operation of the vent fans located in the vent piping from tanks T-200 and T-300 to the atmosphere.

10. Check the pressure reading of the contents of T-900. No or little pressure in T-900 may indicate a leak in the oxygen supply system connections and/or piping. If the pressure reading of T-900 is zero or lower than the low pressure set point, refer to SOP 1 (Oxygen Enriched

Environment Equipment Enclosure Entry) to investigate and determine the source of the oxygen leak.

11. Note all pertinent information related to the response and actions taken in the System Operator field log book, as well as on any applicable OMM logs.

Exposure Hazard	**Monitoring Equipment**	**Monitoring Frequency**	**Action Level (sustained for 1 minute)**	**Required Action**
Hydrogen Sulfide (H_2S)	H_2S or Multi-Gas meter	Breathing zone intervals based on scope and site conditions - Continuously	≤ 0.5 ppm > 0.5 ppm	Normal Operations. Continue Monitoring. Stop Work. Contact SHSO/PM. Re-evaluate engineering controls.
Oxygen (O_2)	Multi-Gas Meter	Breathing zone intervals based on scope and site conditions - Continuously	19.5% -23.5% < 19.5%; >23.5%	Normal Operations. Continue Monitoring. Stop Work/Evacuate. Contact SHSO/PM.
Total VOCs	Photoionization Detector (PID) (10.6 eV lamp or greater)	Continuously In breathing zone	≤ 0.5 ppm >0.5	Normal operations. Continue Monitoring Stop Work. Contact SHSO/PM. Re-evaluate engineering controls.
Lower Explosive Limit (LEL)	Multi-Gas Meter	Breathing zone intervals based on scope and site conditions - Continuously	≤ 5% > 5% -10% > 10%	Normal Operations. Continue Monitoring Contact SHSO/PM. Implement engineering controls. Proceed with caution. Stop Work/Evacuate. Contact SHSO/PM. Re-evaluate engineering controls.

SOP 22: Hazardous Atmosphere Equipment Enclosure Entry

1. Through daily system monitoring, observation of the equipment enclosure oxygen sensor, hydrogen sulfide (H2S) sensor, volatile organic compound (VOC's) sensor, and potentially explosive atmosphere (LEL) sensor, the presence of a hazardous environment will be determined. The potential hazardous environments include an oxygen enriched environment, an oxygen deficient environment, elevated concentrations of H2S, elevated concentrations of VOC's, and a potentially explosive atmosphere.

2. If hazardous atmosphere or critical alarm strobes are illuminated upon arrival, stop work and notify the OMM Engineer immediately and the entire remediation system will be shut down remotely. This Standard Operating Procedure (SOP) presents the procedures that will be followed to enter the building and further investigate the origin of the hazardous atmosphere.

3. Prior to system enclosure entry, contact the Operation, Maintenance, and Monitoring (OMM) Engineer who will access the system remotely to determine the real-time concentration and presence of any potential contaminants in the enclosure.

4. The following minimum personal protective equipment requirements (Level D) will be worn before entering the equipment enclosure: steel-toe boots, safety glasses, reflective vest, and hard hat. Additionally, a H2S personal dosimeter will be utilized at all times while inside the enclosure. The H2S dosimeters are located in the entrance doorway.

5. If the permanent monitoring devices are reporting a hazardous atmosphere, a fully calibrated handheld 4-gas meter will be used during the response. The 4-gas meter will remain clipped to the operator at all times to determine the presence and alert the operator. Exposure limits are located in the table below.

6. Open the barn style doors and man door of the equipment enclosure and allow 5 to 10 minutes for the air to vent to the outer atmosphere. From outside the enclosure, turn the exhaust fan and louvers on to evacuate any hazardous fumes from the enclosure.

7. Before entering the enclosure, communicate with the OMM Engineer who will monitor the real-time concentration of the atmosphere again. Do not enter the enclosure without discussing with the OMM Engineer.

8. If the atmosphere is unsafe anywhere in the enclosure, stop work, exit the enclosure, and notify the OMM Engineer Immediately.

9. Enter the equipment enclosure and check the reading on the oxygen, H2S, VOC, and LEL sensors to see if it is reading an appropriate value once the enclosure has been vented. A value that does not make sense (an extreme high or low value) may indicate that the sensor requires calibration or a component of the sensor is defective.

10. Be aware of any unusual odors. If you begin to feel faint at any point, immediately evacuate the building.

11. Verify that the lids of T-200 and T-300 are securely closed upon entering the equipment enclosure. If the lids are not securely closed, fugitive oxygen, dissolved VOC's in the groundwater, or other gases generated from bioactivity and dissolved in the extracted groundwater may have entered into the equipment enclosure instead of being vented outside as designed.

12. Verify operation of the vent fans located in the vent piping from tanks T-200 and T-300 to the atmosphere.

13. Check the pressure reading of the contents of T-900. No or little pressure in T-900 may indicate a leak in the oxygen supply system connections and/or piping. If the pressure reading of T-900 is zero or lower than the low pressure set point, refer to SOP 1 (Oxygen Enriched Environment Equipment Enclosure Entry) to investigate and determine the source of the oxygen leak.

14. Do not restart the system for normal operation until the cause of the hazardous atmosphere is identified and fixed, and the OMM Engineer gives approval to operate the system.

15. Note all pertinent information related to the response and actions taken in the System Operator field log book, as well as on any applicable OMM logs.

Exposure Hazard	Monitoring Equipment	Monitoring Frequency	Action Level (sustained for 1 minute)	Required Action
Hydrogen Sulfide (H_2S)	H_2S or Multi-Gas meter	Breathing zone intervals based on scope and site conditions - Continuously	≤ 0.5 ppm > 0.5 ppm	Normal Operations. Continue Monitoring. Stop Work. Contact SHSO/PM. Re-evaluate engineering controls.
Oxygen (O_2)	Multi-Gas Meter	Breathing zone intervals based on scope and site conditions - Continuously	19.5% -23.5% < 19.5%; >23.5%	Normal Operations. Continue Monitoring. Stop Work/Evacuate. Contact SHSO/PM.
Total VOCs	Photoionization Detector (PID) (10.6 eV lamp or greater)	Continuously In breathing zone	≤ 0.5 ppm >0.5	Normal operations. Continue Monitoring Stop Work. Contact SHSO/PM. Re-evaluate engineering controls.
Lower Explosive Limit (LEL)	Multi-Gas Meter	Breathing zone intervals based on scope and site conditions - Continuously	≤ 5% > 5% -10% > 10%	Normal Operations. Continue Monitoring Contact SHSO/PM. Implement engineering controls. Proceed with caution. Stop Work/Evacuate. Contact SHSO/PM. Re-evaluate engineering controls.

Appendix D

Permit to Work/High Risk Permit to Work Forms

GENERAL PERMIT TO WORK /TAILGATE MEETING – Chevron

Version 01.04.2012
Permit ID:
_____ - _____ - _____ - _____
(Facility #) Year Month Day
Example: 1239770 – 11 – 12 – 05 : Section not required – for filing only

Project Name: _____

Project Location (Address): _____ **Chevron Facility #:** _____

Chevron Project Manager: **Total # of Companies at Site:**

Valid Date (1 day): _____ **Person Conducting Meeting:** _____

Modifications to this form may not be made unless approved by the ARCADIS-Chevron Principal in Charge (PIC) – John Vogeley. This Permit is intended to be completed in the field by a qualified and predetermined Permit Approver. The individual completing this permit should communicate each section to field staff during the daily safety meeting. It is intended to serve as a tool for identifying and mitigating hazards that affect every worker on site. Solicit input from persons attending the safety meeting during permit completion. Resolve all "NO" responses prior to starting work.

1a.	Have necessary work permits (local, state and/or federal) been obtained (including those for subcontractors)?	☐ Yes ☐ No ☐ N/A
1b.	If **CONFINED SPACE** activities are to be conducted has the CONFINED SPACE portion of the HIGH RISK WORK PERMIT been completed?	☐ Yes ☐ No ☐ N/A
1c.	If **EXCAVATION / TRENCHING / DRILLING / OVERHEAD CLEARANCE** activities deeper than 4 feet and/or within 10 feet of a high pressure gas line and/or within 3 feet of a buried active product or electric line or overhead work involving equipment within 15 feet of an overhead electric line or pole supporting the line are to be conducted has the applicable portion of the HIGH RISK WORK PERMIT been completed? In Latin America, will drilling activities be conducted? Drilling/Hot Work Sections on HIGH RISK WORK PERMIT completed?	☐ Yes ☐ No ☐ N/A
1d.	If **HOTWORK** activities are to be conducted has the HOTWORK and FIRE MONITOR ACTIVITY LOG portions of the HIGH RISK WORK PERMIT been completed?	☐ Yes ☐ No ☐ N/A
1e.	If **LOCK OUT / TAG OUT (LO/TO)** activities are to be conducted has the LO/TO portion of the HIGH RISK WORK PERMIT been completed?	☐ Yes ☐ No ☐ N/A
1f.	If **DIVING** activities are to be conducted has the DIVING portion of the HIGH RISK WORK PERMIT been completed?	☐ Yes ☐ No ☐ N/A
1g.	If workers are **WORKING AT an ELEVATION over 6 feet** has the WORKING AT ELEVATION portion of the HIGH RISK WORK PERMIT been completed?	☐ Yes ☐ No ☐ N/A
1h.	If workers are **BOATING** or **WORKING NEAR OPEN WATER** has the applicable portion of the HIGH RISK WORK PERMIT been completed?	☐ Yes ☐ No ☐ N/A
1i.	If **DEMOLITION, REMOVAL OF PIPELINES AND BURIED STRUCTURES** work activities are to be conducted has the EXCAVATION / TRENCHING / DRILLING / OVERHEAD CLEARANCE and DEMOLITION, REMOVAL OF PIPELINES AND BURIED STRUCTURES portions of the HIGH RISK WORK PERMIT been completed?	☐ Yes ☐ No ☐ N/A
2.	Have applicable pre-trip paperwork (JMP and vehicle inspection checklists) been completed by ARCADIS personnel and ARCADIS subcontractors (if applicable)? Has subcontractor paperwork been inspected?	☐ Yes ☐ No ☐ N/A
3.	**HASP:** Have all sections of the Health & Safety Plan (E-HASP) applying to today's tasks been reviewed?	☐ Yes ☐ No ☐ N/A
4.	**HASP:** Has the E-HASP been signed by appropriate on-site personnel?	☐ Yes ☐ No ☐ N/A
5.	**HASP:** Have all visitors and workers completed the E-HASP written test? Have all tested been graded? Deficiencies reviewed?	☐ Yes ☐ No ☐ N/A
6.	**HASP:** Have the action levels and work zones been identified and reviewed?	☐ Yes ☐ No ☐ N/A
7.	**HASP:** Will traffic control efforts comply with Chevron and ARCADIS requirements? (See Back Page for Chevron Requirements)	☐ Yes ☐ No ☐ N/A
8a.	**Air Monitoring:** Air monitoring being conducted? (If yes, then complete 8b – 8d)	☐ Yes ☐ N/A
8b.	**Air Monitoring:** Is monitoring equipment present and properly calibrated?	☐ Yes ☐ No ☐ N/A
8c.	**Air Monitoring:** . Have E-HASP requirements for air monitoring been reviewed?	☐ Yes ☐ No ☐ N/A
8d.	**Air Monitoring:** Will Air Monitoring Log be completed by Health & Safety Supervisor (SSO)?	☐ Yes ☐ No ☐ N/A
9.	Has Chevron's hand safety policy, including FOBK prohibition, Stop Work Authority been discussed and highlighted during the health and safety meeting (See Statement on Back Page)	☐ Yes ☐ No ☐ N/A
10.	Have Operational Excellence Tenets been discussed and highlighted during the daily health and safety meeting? (See Back Page for Reference)	☐ Yes ☐ No ☐ N/A
11.	**Electrical:** Will GFCI in-line protectors, positioned next to the power source, be tested and utilized if AC-powered equipment is used?	☐ Yes ☐ No ☐ N/A
12.	**Electrical:** Have electrical cords and been inspected prior to use?	☐ Yes ☐ No ☐ N/A
13.	**Electrical:** If electricians will be required to work in live panels, have they been trained on NFPA 70E? Are they prepared to comply with NFPA 70E requirements?	☐ Yes ☐ No ☐ N/A
14.	**Equipment Operation:** Are above-ground utilities identified and clearly visible by equipment operators? Underground utilities marked?	☐ Yes ☐ No ☐ N/A
15.	**Equipment Operation:** Has **AN** equipment inspection checklist been completed for all equipment being used today? Note: Checklists may vary by office, subcontractor and equipment	☐ Yes ☐ No ☐ N/A
16.	**Equipment Operation or subsurface work:** Has the underground/overhead utilities checklist been completed?	☐ Yes ☐ No ☐ N/A
17.	+ Have shut-off switches/valves been located (as required by scope work)?	☐ N/A ☐ Electric ☐ Gas ☐ Water ☐ Other ☐ N/A
18.	+ Are proper traffic and/or fire control measures in-place?	☐ Traffic ☐ Fire Prevention ☐ N/A
19.	+ Who is the designated SSO for today?	**Name:**
20.	+ Does everyone know his/her role during an emergency? E-HASP section related to emergency roles and responsibilities reviewed?	☐ Yes ☐ No ☐ N/A
21.	+ Does everyone know the location, directions, and name of the nearest hospital?	☐ Yes ☐ No ☐ N/A
22.	+ Has a plan been established to ensure emergency responders can easily locate or be escorted to the work site?	☐ Yes ☐ No ☐ N/A
23.	+ Where is the nearest working phone located (non-cell phone)	**Location:**
24.	+ Where is the location of the primary first aid kit (to include portable eyewash & CPR shield)?	**Location:**
25.	+ Where is the location of the primary fire extinguisher?	**Location:**
26.	+ Have signals or alarms (stop work, sheltering, evacuation, etc.) been communicated to everyone on site? Without conflicts with other work activity?	☐ Yes ☐ No ☐ N/A
27.	+ Are weather conditions acceptable or have associated risks been mitigated? Are hydrating fluids (no caffeine) avaialbe to workers? Shade? Shelter within reasonable distance?	☐ Yes ☐ No ☐ N/A
28.	+ Document last inspection date of primary fire extinguisher and expiration of primary first aid kit contents:	**Extinguisher -** **First Aid Kit -**
29.	Have modifications to safety procedures or documentation (ie. JMP, TCP) been made and communicated to onsite personnel?	☐ Yes ☐ No ☐ N/A
30.	Are MSDS for ALL chemicals being used at site (oils, detergents, preservatives, etc.) included in E-HASP? Have crews using these chemicals read the MSDS? Are they readily available for quick review or to hand off to EMS personnel?	☐ Yes ☐ No ☐ N/A
31.	Waste labels prepared? Solid waste drums stored on pallets? Liquid waste drums stored on secondary containment? Drums stored at location acceptable to property owner?	☐ Yes ☐ No ☐ N/A
32.	Is waste currently on site? If so, what is the status of the disposal process: CIRCLE ONE of the FOLLOWING: **1.** Characterization or Sample collection / **2.** Profile / **3.** Scheduled pickup / **4.** OTHER:	☐ Yes ☐ No ☐ N/A

33. What is the scope of work for ARCADIS and ARCADIS subcontractors today?	List Company Responsible	JLA prepared and/or reviewed TODAY for each task?
A)		☐ Yes ☐ No ☐ N/A
B)		☐ Yes ☐ No ☐ N/A
C)		☐ Yes ☐ No ☐ N/A
D)		☐ Yes ☐ No ☐ N/A

Hazard Identification Tool

Utilize the table below to identify and summarize briefly what hazards exist, where on site and/or as a result of what process. Summarize critical actions necessary to mitigate these hazards. This section should be completed IN ADDITION TO the JOB LOSS ANALYSIS (JLA) required for the day and should assist in JLA preparation. This section is intended to serve as a tool and not a duplication of efforts. Be as brief as possible on THIS TABLE.

Energy Source		Hazards	Critical Action(s)
	Gravity Falling objects, collapsing roof and a body tripping/falling		
	Motion Vehicle, vessel, or equipment movement; flowing water; wind; and body positioning when lifting, straining or bending		
	Mechanical Rotating equipment, corpressed springs, drive belts, conveyors and motors		
	Electrical Power lines, transformers, static charges, lightning, energized equipment, wiring and batteries		
	Pressure Pressure piping, compressed cylinders, control lines, vessels, tanks, hoses, and pneumatic nd hydraulic equipment		
	Temperature Open flame, ignition sources; hot or chold surfaces, liquids or gasses; steam, friction; and general environmental and weather conditions		
	Chemical Flammable vapors, reactive hazards, carcinogens or other toxic compounds, corrosives, pyrophorics, combustibles, oxygen-deficient atmostpheres, weldings fumes, dusts		
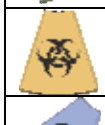	**Biological** Animals, bacteria, viruses, insects, blood-borne pathogens, improperly handled food and contaminated drinking water		
	Radiation Lighting issues, welding arcs, solar rays, microwaves, lasers, X-rays and naturally occurring radioactive material (NORM)		

ALL PERMITS MUST BE RETAINED IN A UNIQUE LOCATION DESIGNATED FOR PERMITS ONLY

	Sound Equipment noise, impact noise, vibration, high-pressure release and the impact of noise to communication		

34.	Are personnel qualified to perform work at site? Training records verified and available onsite for review?	☐ Yes ☐ No ☐ N/A
35.	Are appropriate tools on-site to complete tasks safely and appropriately? Discussed in JLAs?	☐ Yes ☐ No ☐ N/A
36.	Locally fabricated equipment approved by Chevron PM?	☐ Yes ☐ No ☐ N/A
37.	Will work conducted in a multiple work zones or by multiple crews have the potential to impact each other? If so, is there a plan detailed on each JLA to address communication between work zones/companies?	☐ Yes ☐ No ☐ N/A
38.	Level of PPE required for each task specified to workers (Level C, Level D, etc.)? PPE specifics discussed and documented in JLAs?	☐ Yes ☐ No ☐ N/A
39.	Motor vehicle precautions discussed? Maintain a minimum of 3 feet from objects; avoid backing without a spotter, if possible; forward motion always preferred; set parking brake.	☐ Yes ☐ No ☐ N/A

Special Safety Concerns For Today

Personnel wishing to volunteer information relating to allergies/ailments/illnesses AND whether s/he is wearing contact lenses:

Last Name:	Note:	Last Name:	Note:
Last Name:	Note:	Last Name:	Note:

Short Service Employee List (requires prior Chevron PM approval – no more than 1 SSE if < 5 Workers on Site)

Short Service Employees On-Site	Short Service Mentor

Signature Section

NOTICE TO ALL WORKERS: – By signing below, you agree that you have read and fully understand the JLAs applicable to you and your assigned duties.

Name (PRINT)	Company	Before Work (Time)	Signature	Mid Day (Time)	Initials (Mid- Day Meeting)
1.					
2.					
3.					
4.					
5.					
6.					
7.					
8.					
9.					
10.					

"I have assessed the risks posed by work activities planned for today and steps to mitigate those risks (e.g. E-HASP, JLA, PTW, tailgate meeting, coordination with other parties on site, etc.) have been completed to the best of our ability. Issues identified on the front page of this permit have been corrected. Work is safe to proceed. If site conditions change, Stop Work Authority will be used to assess work conditions."

Permit Approver: _____ Date (___/___/___)

Time Work Approved to Proceed: _____ Time Work to Cease (Permit Closed): _____

Daily H&S Activity Log / End of Day Summary

Time	ARCADIS Employee	Activity (LPO, Near Loss, Incident, Stop Work, Audit, etc.)	Comments

Reference Section

5 Keys to Operational Discipline

- ✓ **Everyone knows how to do their job correctly and safely.**
- ✓ **Supervisors and leaders reinforce the right behaviors and correct poor behavior and performance.**
- ✓ **Workers recognize hazards and anticipate unusual situations.**
- ✓ **Workers expect and demand that their coworkers follow procedures.**
- ✓ **When unusual situations occur, work is stopped and change is effectively managed.**

Operational Discipline: Every task, the right way, every time

Safety Vest Classes

Class I – high visibility safety vest with no reflective bands	~~**NOT ALLOWED ON CHEVRON PROJECT SITES**~~
Class II – high visibility safety vest with reflective bands around chest, shoulders and back	Minimum class allowed at Chevron project sites; used in standard lighting conditions and mod. traffic conditions
Class III – high visibility safety vest with reflective bands around chest or waist, shoulders and sleeves	When performing night-time work or work in low light conditions; when working near areas where traffic flow is over 50 mph

Chevron Work Zone Level Summary

Level I	Min. of 4 delineators, with max. space between of 4 feet. Use buddy system and vehicle with flashers as necessary.
Level II	Barrier tape on delineators with flags and the use of field vehicles (with flashing yellow light or vehicle hazard lights) and\or other lane control devices. Metal barricades may be used in conjunction because of the noise they make if knocked over. The buddy system should be used in areas where the worker cannot give undivided attention to traffic when exposed to traffic hazards. Use for temporary securing of an area (for sampling ground water, hand digging, etc.) or for temporary isolation of an area for storing or moving equipment/supplies.
Level III	Plastic Security Fencing and\or Type 2 or 3 barricades. A flashing yellow light on the vehicle may be used for additional visibility. Be cognizant of blocking of pump islands and any other dealer concerns. To be used when there is heavy equipment, power tools, in areas near electrically energized or rotating equipment, as protection for workers or public near slow moving traffic or with high traffic volume, in driveways, around tripping hazards, and to control third party foot traffic. If there is no third party traffic potential then Level 3 is NOT required.
Level IV	Often requires oversight by a licensed traffic controller. In the U.S., the DOT requires signage and protection devices – refer to the Manual on Uniform Traffic Control Devices (MUTCD). Your country/state/region may have more stringent requirements (e.g., Caltrans WATCH Manual in California).A thorough Job Safety Analysis is required. Note: If the likelihood of vehicles backing in a public right-of-way is low, the 48" minimum height of control devices may not apply.

Chevron Tenets of Operation

1. **Always operate within design and environmental limits.**
2. **Always operate in a safe and controlled condition.**
3. **Always ensure safety devices are in place and functioning.**
4. **Always perform safe work practices and procedures.**
5. **Always meet or exceed customers' requirements.**
6. **Always maintain integrity of dedicated systems.**
7. **Always comply with all applicable rules and regulations.**
8. **Always address abnormal conditions.**
9. **Always follow written procedures for high-risk or unusual situations.**
10. **Always involve the right people in decisions that affect procedures and equipment.**

STOP WORK AUTHORITY

As an employee or contractor for Chevron, you are responsible and authorized to stop any work that is not safe or does not comply with the OE tenets. There will be NO repercussions for initiating Stop Work Authority.

ALL PERMITS MUST BE RETAINED IN A UNIQUE LOCATION DESIGNATED FOR PERMITS ONLY

HIGH RISK PERMIT TO WORK

Project Name: _____ Chevron Facility #: _____

Project Location (Address): _____ Total # On-site Workers: _____

Chevron Project Manager: _____ Project Type: _____

Valid Date: Time Written: Time Closed-out:

THIS HIGH RISK PERMIT REQUIRES COMPLETION BY AN AUTHORIZED PERMIT APPROVER. EVERY WORKER SHOULD READ AND UNDERSTAND, IN THEIR ENTIRETY, APPLICABLE SECTIONS IN THE SITE HEALTH AND SAFETY PLAN. THIS PERMIT DOES NOT REPLACE TASK-SPECIFIC CHECKLISTS AND FORMS PRESENT IN THE SITE HEALTH AND SAFETY PLAN.

CONFINED SPACE

Confined Space = Space with restricted entry/exit, large enough to contain worker and not intended for worker occupancy.
Permit-required Confined Space = Confined space with a hazard to health or life associated with it.

1.	Location and Description of Confined Space:	
2.	Entry objectives:	
3.	Equipment / Materials required for entry:	
4a.	Time of entry:	4b. Expiration of entry:
5.	Type of respirator:	6. Level of PPE protection: ☐ Level A ☐ Level B ☐ Level C ☐ Level D
7.	Air monitoring: ☐ Continuous ☐ 5 minutes ☐ 10 minutes ☐ 15 minutes for ☐ % Oxygen ☐ % LEL ☐ H_2S ☐ CO ☐ Other:	
	Has each entrant received confined space training?	☐ Yes (Stop Work) ☐ No
8.	Has each entrant developed / reviewed JSA for scope of work in confined space?	☐ Yes (Stop Work) ☐ No
9.	Have entrants and attendants agreed upon hand signals?	☐ Yes (Stop Work) ☐ No
10.	Do entrants have any medical conditions or currently taking medication that could affect their safety in the confined space?	☐ Yes (Stop Work) ☐ No
11.	Is there a rescue plan in place that includes a worker safety line or self-retriever?	☐ Yes ☐ No (Stop Work) ☐ N/A
12.	Is a trained rescue team available at the entry point?	☐ Yes ☐ No (Stop Work) ☐ N/A
13a.	Number of Entrants:	13b. Number of Attendants:
	Name of Entrants	Name of Attendants
14.	Authorized Permit Approver (PRINT):	Authorized Permit Approver (SIGNATURE):
15.	Chevron PM acceptance? *Must be accepted by Chevron PM or pre-approved company representative*	☐ E-mail ☐ Fax ☐ Phone (w/ documentation) ☐ No

EXCAVATION / TRENCHING / DRILLING / OVERHEAD CLEARANCE

Required for excavations deeper than 4 feet, excavations or drilling within 10 feet of a buried high pressure gas line, excavation or drilling within 3 feet of a buried active product line or active electric line, or work involving equipment (such as pulling unit, mast truck, backhoe or excavator) within 15 feet of active overhead electrical line or pole supporting an electric line.

1.	Soil classified as:	☐ Stable rock ☐ Type A ☐ Type B ☐ Type C
2a.	Soil classified on:	2b. Soil classified by:
3.	Type of protection system in use: ☐ Sloping ☐ Shoring ☐ N/A ☐ Other :	
4.	Description of excavation/trench/drilling:	
5.	Have underground utilities been marked by contracted utility locating company?	☐ Yes ☐ No ☐ N/A
6.	Are underground installations including utilities in danger?	☐ Yes ☐ No ☐ N/A
7.	Has the Chevron AND ARCADIS Underground / Overhead Utility Checklist been completed?	☐ Yes ☐ No ☐ N/A
8.	Has the Daily / Periodic Excavation Inspection Checklist been completed?	☐ Yes ☐ No ☐ N/A
8.	Document if the following are present:	
	☐ Electric Power Line (method of marking [i.e. red flags]):	☐ Drain Line (method of marking):
	☐ Natural Gas Line (method of marking):	☐ Underground storage tank (method of marking):
	☐ Telephone Line (method of marking):	☐ Underground Cable (method of marking):
	☐ Water Line (method of marking):	☐ Overhead Power Line (method of marking):
	☐ Product Line (method of marking):	☐ Overhead Product Line (method of marking):
	☐ Sewer Line (method of marking):	☐ Steam Line (method of marking):
9.	Authorized Permit Approver (PRINT):	Authorized Permit Approver (SIGNATURE):
10.	Chevron PM acceptance? *Must be accepted by Chevron PM or pre-approved company representative*	☐ E-mail ☐ Fax ☐ Phone (w/ documentation) ☐ No

HOT WORK

1.	Location and Description of Hot Work:	
2.	Objective of Hot Work:	
3.	Equipment / Material used:	
4a.	Time of Hot Work:	4b. Time of Hot Work Completion:
5a.	Available fire suppression: ☐ Fixed water supply ☐ Fire blanket ☐ Portable extinguisher (*See 5b.→*)	5b. Quantity, size, and type of extinguisher:
6.	Are fire barriers in place to control sparks?	☐ Yes ☐ No ☐ N/A
7.	Air monitoring: ☐ Continuous ☐ 5 minutes ☐ 10 minutes ☐ 15 minutes for ☐ % Oxygen ☐ % LEL ☐ H2S ☐ CO ☐ Other:	
8.	Have workers developed / reviewed JSA for scope of work?	☐ Yes ☐ No ☐ N/A
9.	Have workers been trained on using fire suppression system at site?	☐ Yes ☐ No ☐ N/A
10.	Are adequate monitors available to maintain continuous, unobstructed vision of the hot work being performed?	☐ Yes ☐ No ☐ N/A
11	Has fire monitor been designated with the sole responsibility of monitoring hot work activity and verifying there is no fire condition AFTER hot work has ended?	☐ Yes ☐ No (Stop Work) ☐ N/A
12a.	Name of Employees Performing Hot Work	12b. Name of Dedicated Fire Monitors
13.	**FIRE MONITOR ACTIVITY LOG**	
14.	14a. Time of pre-work survey:	14b. Pre-work LEL%:
	14c. Pre-work Oxygen %:	14d. LEL% after _____ minutes of work:
	14d. Oxygen % after _____ minutes of work:	
15.	Have hot work areas been monitored for up to an hour after completion of hot work activity?	☐ Yes ☐ No ☐ N/A
16.	Authorized Permit Approver (PRINT):	Authorized Permit Approver (SIGNATURE):
17.	Chevron PM acceptance? *Must be accepted by Chevron PM or pre-approved company representative*	☐ E-mail ☐ Fax ☐ Phone (w/ documentation) ☐ No

LOCKOUT / TAGOUT

1.	Have authorized and affected employees been training in the Lockout / Tagout (LO/TO) program?	☐ Yes ☐ No ☐ N/A
2.	Has the LO/TO Equipment-Specific Energy Control Procedure form been completed?	☐ Yes ☐ No ☐ N/A
2.	Are there multiple keys for the lock?	☐ Yes (Stop Work) ☐ No ☐ N/A
3.	Equipment Identification:	

Hazardous Energy Source		Isolation Device			Verifying Lockout Means of Verification of Lockout
Type & Magnitude	Function	Type	Location	ID #	
Electrical 120V					
Electrical (over 120V)					
Pneumatic					
Hydraulic					
Mechanical					
Potential					
Gravity					
Other					

4.	Have current LO/TO locations been inspected by an employee not involved in the energy control process periodically?	☐ Yes ☐ No ☐ N/A
5.	PERMISSION TO REMOVE LOCKOUT / TAGOUT FROM AUTHORIZED EMPLOYEE (PRINT NAME):	☐ E-mail ☐ Fax ☐ Phone (w/ documentation) ☐ No (STOP WORK) OSHA allows removal of LO/TO devices only if worker that applied the lock is not available and permission has been given by that individual. If permission has not been given, documentation of efforts to obtain permission must be kept. The worker that applied the LO/TO must be notified of its removal prior to returning to the work site. This notification and acceptance should be documented.
6.	Authorized Permit Approver (PRINT):	Authorized Permit Approver (SIGNATURE):
7.	Chevron PM acceptance? *Must be accepted by Chevron PM or pre-approved company representative.* ***Exception: O&M performed AT LEAST Quarterly.***	☐ E-mail ☐ Fax ☐ Phone (w/ documentation) ☐ No

1.	Location and Description of Diving:	
2.	Objective of Dive:	
3a.	Time of First Dive:	3b. Time of Last Dive Completion:
4a.	Name of Dive Safety Officer:	4b. Proposed # of Dives Per Day:
5.	Are divers preparing a dive log?	☐ Yes ☐ No (Stop Work) ☐ N/A
6.	What is the minimum surface time interval between dives?	☐ 1 hour ☐ 2 hours ☐ Other _____ hours
7.	Have divers developed / reviewed JSA for scope of work, which includes entry procedures, depth and bottom time limits, emergency procedures, etc.?	☐ Yes ☐ No (Stop Work) ☐ N/A
8.	Are dive physicals available for each diver?	☐ Yes ☐ No (Stop Work) ☐ N/A
9.	Are divers mentally and physically prepared for diving?	☐ Yes ☐ No (Stop Work) ☐ N/A

10a. Name of Certified Divers	10b. Name of Support Personnel

11.	Have divers and support team reviewed hand signals, emergency recall signals and emergency procedures?	☐ Yes ☐ No (Stop Work) ☐ N/A
12.	Is dive platform stable, seaworthy and outfitted with proper safety equipment?	☐ Yes ☐ No (Stop Work) ☐ N/A
13.	Has all dive gear been inspected by the user and found to be fully operational?	☐ Yes ☐ No (Stop Work) ☐ N/A
14.	Is a means of communication available? (cellular telephone, landline phone, NAVSAT,etc.)?	☐ Yes ☐ No (Stop Work) ☐ N/A
15.	Is location of diving first aid kit, drinking water, oxygen resuscitator and backboard and rescue equipment known to divers and support personnel?	☐ Yes ☐ No (Stop Work) ☐ N/A
16.	What is the address and phone number to the closest hospital to the dive site?	
17.	What is the address and phone number to the nearest recompression chamber to the site?	
18.	Authorized Permit Approver (PRINT):	Authorized Permit Approver (SIGNATURE):
19.	Chevron PM acceptance? *Must be accepted by Chevron PM or pre-approved company representative*	☐ E-mail ☐ Fax ☐ Phone (w/ documentation) ☐ No

WORKING AT ELEVATION

Persons working at or above an elevation of 6 feet must have fall protection. OSHA 29 CFR 1926 Subpart M governs fall protection.

1.	Do employees know appropriate anchorage points for each task that requires a fall-arrest or restraint system?	☐ Yes ☐ No (Stop Work) ☐ N/A
2.	Are all anchorage points stable, substantial and have sufficient strength to withstand twice the potential impact energy of the free-fall?	☐ Yes ☐ No (Stop Work) ☐ N/A
3.	Are all anchorage points for body harnesses located at shoulder height?	☐ Yes ☐ No (Stop Work) ☐ N/A
4.	Are anchorage points for self-retracting lifeline systems located overhead?	☐ Yes ☐ No (Stop Work) ☐ N/A
5.	If the lifeline, lanyard, or self-retracting lifeline is not permanently attached to an anchorage point at the elevated work area, is the first worker up or the last worker down protected while climbing and traversing?	☐ Yes ☐ No (Stop Work) ☐ N/A
6.	Does the lifeline have a minimum breaking strength of 5,000 pounds?	☐ Yes ☐ No (Stop Work) ☐ N/A
7.	Is the lifeline free from abrasive or cutting edges?	☐ Yes ☐ No (Stop Work) ☐ N/A
8.	Does the system provide fall protection as the worker connects to and releases from the lifeline?	☐ Yes ☐ No (Stop Work) ☐ N/A
9.	Is the lifeline arranged so workers never have to hold it for balance?	☐ Yes ☐ No (Stop Work) ☐ N/A
10.	Is the vertical segment integrated with the horizontal segment to provide continuous fall protection?	☐ Yes ☐ No (Stop Work) ☐ N/A
11.	Has equipment been inspected thoroughly for signs of abrasion, fraying, punctures, etc. prior to use?	☐ Yes ☐ No (Stop Work) ☐ N/A
12.	Is the fall arrester equipment with a locking mechanism that prevents unintentional opening of the device and subsequent disengagement from the lifeline?	☐ Yes ☐ No (Stop Work) ☐ N/A
13.	Is the lanyard length as short as necessary and in no case greater than 6 feet?	☐ Yes ☐ No (Stop Work) ☐ N/A
14.	Does the lanyard have a shock absorbing feature to limit the arresting forces to 500-600 pounds?	☐ Yes ☐ No (Stop Work) ☐ N/A
15.	Has the free-fall distance been considered, so that a worker will not strike a lower surface or object before the fall is arrested?	☐ Yes ☐ No (Stop Work) ☐ N/A
16.	Have pendulum-swing fall hazards been eliminated?	☐ Yes ☐ No (Stop Work) ☐ N/A
17.	Have safe methods to retrieve fallen workers been planned?	☐ Yes ☐ No (Stop Work) ☐ N/A
18.	Have harnesses been inspected ON THE USER by Health & Safety Supervisor or Authorized Permit Writer?	☐ Yes ☐ No (Stop Work) ☐ N/A
19.	Have ladders and scaffolds been inspected prior to use?	☐ Yes ☐ No (Stop Work) ☐ N/A
20.	Authorized Permit Approver (PRINT):	Authorized Permit Approver (SIGNATURE):
21.	Chevron PM acceptance? *Must be accepted by Chevron PM or pre-approved company representative.*	☐ E-mail ☐ Fax ☐ Phone (w/ documentation) ☐ No

HIGH RISK WORK PERMIT

BOATING OR WORKING NEAR OPEN WATER*

***CFR 1910.126 pertains to working over or near open water. This permit is limited to operations "where a risk of drowning exists".**

1.	Does boat have current registration on board?	☐ Yes ☐ No (Stop Work) ☐ N/A
2.	Does boat operator have appropriate training (US Coast Guard Boating Safety Course or equivalent)?	☐ Yes ☐ No (Stop Work) ☐ N/A
3.	Have all passengers been acquainted with use and location of safety equipment, radio, scope of work, etc.?	☐ Yes ☐ No (Stop Work) ☐ N/A
4.	Have emergency docking location(s) been assessed by boat operator?	☐ Yes ☐ No (Stop Work) ☐ N/A
5.	Are properly fitted personal flotation devices (PFDs) available for every boat passenger?	☐ Yes ☐ No (Stop Work) ☐ N/A
6.	Have PFDs been inspected for tears/holes, discolored or weakened material, insecure straps, zippers, buckles or labels that are no longer readable?	☐ Yes ☐ No (Stop Work) ☐ N/A
7.	Is a throw ring (Class IV PFD) on the vessel?	☐ Yes ☐ No (Stop Work) ☐ N/A
8.	If sampling on or near water below 50° F, will cold water immersion suits be worn by all passengers?	☐ Yes ☐ No (Stop Work) ☐ N/A
9.	Is a horn available capable of producing a 4-second blast audible for at least ½ mile?	☐ Yes ☐ No (Stop Work) ☐ N/A
10.	If using a portable air horn as the primary audible device is a second can of air or an alternative audible device available?	☐ Yes ☐ No (Stop Work) ☐ N/A
11.	Are all navigational AND instrument lights in working order?	☐ Yes ☐ No (Stop Work) ☐ N/A
12.	Are visual signaling devices (flares, days signals, etc.) stored in a dry location and available at all times?	☐ Yes ☐ No (Stop Work) ☐ N/A
13.	Is there a plug and material for bailing water from the boat?	☐ Yes ☐ No (Stop Work) ☐ N/A
14.	Is an additional propulsion device (oar, paddles, smaller motor) in the boat?	☐ Yes ☐ No (Stop Work) ☐ N/A
15.	Is there a US Coast Guard-approved marine fire extinguisher, a stocked first aid kit and batteries on board?	☐ Yes ☐ No (Stop Work) ☐ N/A
16.	Have the fuel, oil, and battery levels been checked?	☐ Yes ☐ No (Stop Work) ☐ N/A
17.	Is the weather forecast favorable for boating and is a weather band radio operational?	☐ Yes ☐ No (Stop Work) ☐ N/A
18.	Is an anchor and suitable length of anchor line available on the boat?	☐ Yes ☐ No (Stop Work) ☐ N/A
19.	Are cell phones and a marine radio available and operational?	☐ Yes ☐ No (Stop Work) ☐ N/A
20.	Has a float plan been prepared for the boating activities and has it been given to on-shore personnel?	☐ Yes ☐ No (Stop Work) ☐ N/A
21.	Are throw rings or PFDs available for employees working near or above open water? Are throw rings readily accessible?	☐ Yes ☐ No (Stop Work) ☐ N/A
22.	If working near or above open water does the JSA adequately address "fall in" hazards?	☐ Yes ☐ No (Stop Work) ☐ N/A
23.	Has a rescue plan been added to the JSA for "fall in" emergencies?	☐ Yes ☐ No (Stop Work) ☐ N/A

"I have assessed the risks posed by work activities planned on or near the water and have taken steps to mitigate those risks. If working on a boat I will familiarize myself with federal, state and local boating regulations and/or International Inland Navigation Rules. I will wear a US Coast Guard-approved personal flotation device AT ALL TIMES when I am in a boat or working near or above water."

24.	Name of Boaters (PRINT)	Name of Boaters (SIGNATURE)
25a.	Any boat passengers have allergies/ailments/illnesses?	25b. ☐ Yes (If YES, provide details below: ☐ No
26.	Authorized Permit Approver (PRINT):	Authorized Permit Approver (SIGNATURE):
27.	Chevron PM acceptance? *Must be accepted by Chevron PM or pre-approved company representative*	☐ E-mail ☐ Fax ☐ Phone (w/ documentation) ☐ No

DEMOLITION, REMOVAL OF PIPELINES AND BURIED STRUCTURES

Complete the EXCAVATION / TRENCHING / DRILLING / OVERHEAD CLEARANCE portion of this permit before proceeding below.

1.	Have necessary federal, state and local permits been obtained?	☐ Yes (Stop Work) ☐ No ☐ N/A
2.	Has the Excavation / Trenching portion of this permit been completed?	☐ Yes ☐ No ☐ N/A
3.	Have storage tanks and pipelines been identified on drawings?	☐ Yes ☐ No ☐ N/A
4.	Have underground installations been identified using ground penetrating radar?	☐ Yes ☐ No ☐ N/A
5.	Have tanks and pipelines been emptied and filled with inert material prior to removal?	☐ Yes ☐ No ☐ N/A
6.	Will there be steps to prevent spills or releases?	☐ Yes (Stop Work) ☐ No ☐ N/A
7.	Are there adequate materials for containment and cleanup of spills or releases?	☐ Yes (Stop Work) ☐ No ☐ N/A
8.	Has a debris pile been selected at a safe location away from the immediate work area?	☐ Yes (Stop Work) ☐ No ☐ N/A
9.	Have fire department personnel been notified of today's work activities?	☐ Yes ☐ No ☐ N/A
10.	Is there a need to decontaminate debris prior to removal from site?	☐ Yes ☐ No ☐ N/A
11.	Have plans been made for scrap material to be removed from the site expeditiously?	☐ Yes ☐ No ☐ N/A
12.	Authorized Permit Approver (PRINT):	Authorized Permit Approver (SIGNATURE):
13.	Chevron PM acceptance? *Must be accepted by Chevron PM or pre-approved company representative.* ***Exception: O&M performed AT LEAST Quarterly.***	☐ E-mail ☐ Fax ☐ Phone (w/ documentation) ☐ No

ARCADIS
Infrastructure · Water · Environment · Buildings

General PTW Supplement – Hazard ID

Project Number:		
Project Name:	**Localization:**	**Meeting Conducted by:**
Subcontractor:	**Subcontractor/Other Companies:**	**Date and Time:**

Activities General Description:

Permits Needed: ☐General ☐Hot Work ☐Excavation ☐ Confined Space ☐Other (specify):

Reminders (Refer to information on back of page):

☐Stop Work Authority | ☐Loss Prevention Self Assessment | ☐ Chevron's Tenets of Operation #: | ☐Operational Discipline

Hazard Identification Tool (Refer to information on back of page)

Energy Source		Hazards Identified On-Site	Critical Action
	Gravity		
	Motion		
	Mechanical		
	Electrical		
	Pressure		
	Temperature		
	Chemical		
	Biological		
	Radiation		
	Sound		

Personal Protective Equipment (PPE):		Equipment Needed:
☐Hardhat	☐Leather Gloves	☐Multiple Gas Detector
☐Safety Glasses/Eyeglasses	☐Cut Resistant Gloves	☐Barricades/Signs
☐Reflective Vest	☐Nitrile Gloves	☐Cones/Flags
☐Safety Boots	☐ Faceshield	☐Spill Prevention Kit/Materials
☐Hearing Protection	☐Tyvek	☐First Aid Kit
☐Other (specify):		☐Fire extinguisher
		☐ Other (specify):

Designated Hospital: **CPR/FA Trained Personnel:**	**Allergies/Conditions (voluntary)**	**Emergency Instructions:**

Attendees:	

ARCADIS
Infrastructure · Water · Environment · Buildings

Stop Work Authority

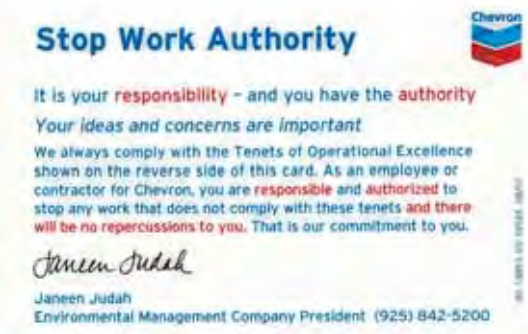

Chevron Tenets of Operation

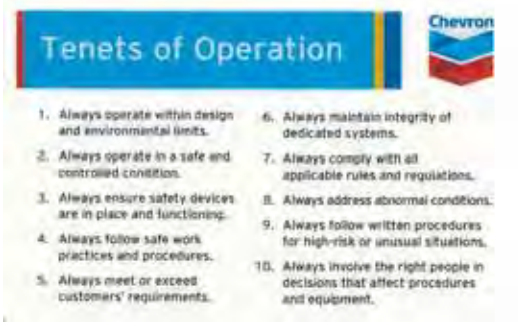

Loss Prevention Self Assessment

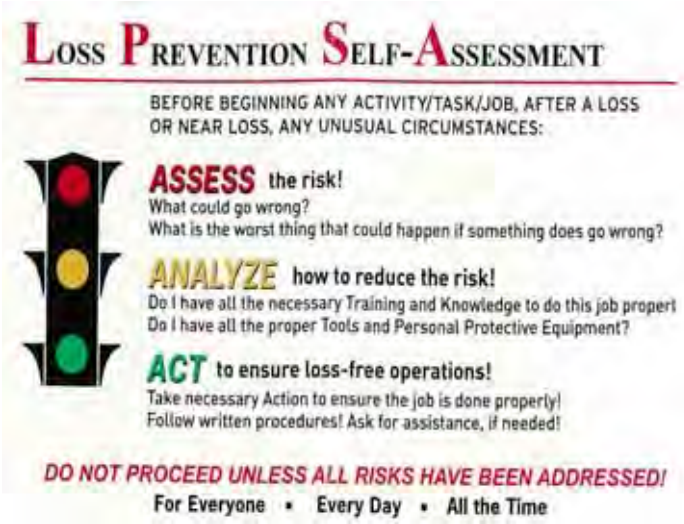

Hazard Identification Tool

Operational Discipline

Every task, done right, every time

Appendix E

System OMM Logs/Checklists

Remote Monitoring Daily Log

Groundwater Remediation System
Former Tappan Terminal Site
Hastings on Hudson, New York

Date: **Time:**		**Reviewer:**
Item Description		**Comments**
Extraction Well 1		
Pump Cycling or Running Continuous **(cycling/continuous)**		
Pump Run Time Meter Reading **(hours)**		
Pump Control Setting **(H/O/A)**		
Instantaneous Flow Rate **(gpm)**		
Totalized Flow **(gallons)**		
Extraction Well 2		
Pump Cycling or Running Continuous **(cycling/continuous)**		
Pump Run Time Meter Reading **(hours)**		
Pump Control Setting **(H/O/A)**		
Instantaneous Flow Rate **(gpm)**		
Totalized Flow **(gallons)**		
T-200 Equalization Tank		
Water Level in Tank Held Constant **(yes/no)**		
If Applicable – Depth of Water **(feet)**		
P-200 Transfer Pump		
Pump Cycling or Running Continuous **(cycling/continuous)**		
Pump Run Time Meter Reading **(hours)**		
Pump Control Setting **(H/O/A)**		
Instantaneous Flow Rate **(gpm)**		
Totalized Flow (gallons)		
Oxygen Amendment		
Oxygen Generator Operation Control Setting **(H/O/A)**		
SV-900 Operation Control Setting **(H/O/A)**		
Valve Opening **(P-200 Operating)**/Closing **(P-200 Not Operating)** with Respect to P-200 Operation **(yes/no)**		
Motorized Ball Valve		
Valve Opening **(P-200 Operating)**/Closing **(P-200 Not Operating)** with Respect to P-200 Operation **(yes/no)**		
Valve Control Setting **(H/O/A)**		
T-300 Decant Tank		
Water Level in Tank Held Constant **(yes/no)**		
If Applicable – Depth of Water **(feet)**		
Dissolved Oxygen Reading **(ppm)**		
P-300 Injection Pump		
Pump Cycling or Running Continuous **(cycling/continuous)**		
Pump Run Time Meter Reading **(hours)**		
Pump Control Setting **(H/O/A)**		
Instantaneous Flow Rate **(gpm)**		
Totalized Flow **(gallons)**		
Discharge Manifold		
Trench 1		
Totalized Effluent Flow **(gallons)**		
Trench 2		
Totalized Effluent Flow **(gallons)**		
Trench 3		
Totalized Effluent Flow **(gallons)**		
Trench 4		
Totalized Effluent Flow **(gallons)**		
Trench 5		
Totalized Effluent Flow **(gallons)**		
Injection Well 1		
Totalized Effluent Flow **(gallons)**		
Injection Well 2		
Totalized Effluent Flow **(gallons)**		
Injection Well 3		
Totalized Effluent Flow **(gallons)**		
Injection Well 4		
Totalized Effluent Flow **(gallons)**		

Equipment Enclosure		
Building Temperature **(°F)**		
Atmospheric Pressure Transmitter Reading **(hPa)**		
Oxygen Sensor Reading Normal **(yes/no)**		
Remote Communication Signal Good **(yes/no)**		
System		
Current or Recent Alarm Conditions Noted **(yes/no)**		

Notes:

Vault and Manhole Weekly Log

Groundwater Remediation System
Former Tappan Terminal Site
Hastings on Hudson, New York

Date: **Time:**		**Operator:**
Item Description		**Comments**
Extraction Well 1 – Vault		
Hatch Locked and Lock Functioning Properly **(yes/no)**		
Hatch in Good Condition and Functioning Properly **(yes/no)**		
Piping and Pitless Adaptor Connection in Good Condition **(yes/no)**		
Conduit, Junction Boxes, and Grounding Wire in Good Condition **(yes/no)**		
Well Seal, Pump Removal Cable, and Well Casing in Good Condition **(yes/no)**		
Water Present in the Bottom of the Vault **(yes/no)**		
Ladder in Good Condition, Signs of Corrosion **(yes/no)**		
Extraction Well 2 – Vault		
Hatch Locked and Lock Functioning Properly **(yes/no)**		
Hatch in Good Condition and Functioning Properly **(yes/no)**		
Piping and Pitless Adaptor Connection in Good Condition **(yes/no)**		
Conduit, Junction Boxes, and Grounding Wire in Good Condition **(yes/no)**		
Well Seal, Pump Removal Cable, and Well Casing in Good Condition **(yes/no)**		
Water Present in the Bottom of the Vault **(yes/no)**		
Ladder in Good Condition, Signs of Corrosion **(yes/no)**		
Injection Well 1 – Vault		
Hatch Locked and Lock Functioning Properly **(yes/no)**		
Hatch in Good Condition and Functioning Properly **(yes/no)**		
Piping and Valves in Good Condition **(yes/no)**		
Top Clean-Out Isolation Valve is Closed and Bottom Clean-Out Isolation Valve is Open **(yes/no)**		
Conduit and Junction Box in Good Condition **(yes/no)**		
Well Seal and Well Casing in Good Condition **(yes/no)**		
Water Present in the Bottom of the Vault **(yes/no)**		
Ladder in Good Condition, Signs of Corrosion **(yes/no)**		
Injection Well 2 – Vault		
Hatch Locked and Lock Functioning Properly **(yes/no)**		
Hatch in Good Condition and Functioning Properly **(yes/no)**		
Piping and Valves in Good Condition **(yes/no)**		
Top Clean-Out Isolation Valve is Closed and Bottom Clean-Out Isolation Valve is Open **(yes/no)**		
Conduit and Junction Box in Good Condition **(yes/no)**		
Well Seal and Well Casing in Good Condition **(yes/no)**		
Water Present in the Bottom of the Vault **(yes/no)**		
Ladder in Good Condition, Signs of Corrosion **(yes/no)**		
Injection Well 3 – Vault		
Hatch Locked and Lock Functioning Properly **(yes/no)**		
Hatch in Good Condition and Functioning Properly **(yes/no)**		
Piping and Valves in Good Condition **(yes/no)**		
Top Clean-Out Isolation Valve is Closed and Bottom Clean-Out Isolation Valve is Open **(yes/no)**		
Conduit and Junction Box in Good Condition **(yes/no)**		
Well Seal and Well Casing in Good Condition **(yes/no)**		
Water Present in the Bottom of the Vault **(yes/no)**		
Ladder in Good Condition, Signs of Corrosion **(yes/no)**		
Injection Well 4 – Conduit and Manhole		
Hatch Locked and Lock Functioning Properly **(yes/no)**		
Hatch in Good Condition and Functioning Properly **(yes/no)**		
Piping and Valves in Good Condition **(yes/no)**		
Top Clean-Out Isolation Valve is Closed and Bottom Clean-Out Isolation Valve is Open **(yes/no)**		
Conduit and Junction Box in Good Condition **(yes/no)**		
Well Seal and Well Casing in Good Condition **(yes/no)**		
Water Present in the Bottom of the Vault **(yes/no)**		
Ladder in Good Condition, Signs of Corrosion **(yes/no)**		

Vault and Manhole Weekly Log

Groundwater Remediation System
Former Tappan Terminal Site
Hastings on Hudson, New York

Date: **Time:**		**Operator:**
Item Description		**Comments**
Infiltration Trench 1 – Manhole		
Hatch Locked and Lock Functioning Properly **(yes/no)**		
Hatch in Good Condition and Functioning Properly **(yes/no)**		
Piping and Valves in Good Condition **(yes/no)**		
Top Clean-Out Isolation Valve is Closed and Bottom Clean-Out Isolation Valve is Open **(yes/no)**		
Conduit and Junction Box in Good Condition **(yes/no)**		
Water Present in the Bottom of the Manhole **(yes/no)**		
Ladder in Good Condition, Signs of Corrosion **(yes/no)**		
Clean-Out Covers Locked and Lock Functioning Properly **(yes/no)**		
Infiltration Trench 2 – Manhole		
Hatch Locked and Lock Functioning Properly **(yes/no)**		
Hatch in Good Condition and Functioning Properly **(yes/no)**		
Piping and Valves in Good Condition **(yes/no)**		
Top Clean-Out Isolation Valve is Closed and Bottom Clean-Out Isolation Valve is Open **(yes/no)**		
Conduit and Junction Box in Good Condition **(yes/no)**		
Water Present in the Bottom of the Manhole **(yes/no)**		
Ladder in Good Condition, Signs of Corrosion **(yes/no)**		
Clean-Out Covers Locked and Lock Functioning Properly **(yes/no)**		
Infiltration Trench 3 – Manhole		
Hatch Locked and Lock Functioning Properly **(yes/no)**		
Hatch in Good Condition and Functioning Properly **(yes/no)**		
Piping and Valves in Good Condition **(yes/no)**		
Top Clean-Out Isolation Valve is Closed and Bottom Clean-Out Isolation Valve is Open **(yes/no)**		
Conduit and Junction Box in Good Condition **(yes/no)**		
Water Present in the Bottom of the Manhole **(yes/no)**		
Ladder in Good Condition, Signs of Corrosion **(yes/no)**		
Clean-Out Covers Locked and Lock Functioning Properly **(yes/no)**		
Infiltration Trench 4 – Manhole		
Hatch Locked and Lock Functioning Properly **(yes/no)**		
Hatch in Good Condition and Functioning Properly **(yes/no)**		
Piping and Valves in Good Condition **(yes/no)**		
Top Clean-Out Isolation Valve is Closed and Bottom Clean-Out Isolation Valve is Open **(yes/no)**		
Conduit and Junction Box in Good Condition **(yes/no)**		
Water Present in the Bottom of the Manhole **(yes/no)**		
Ladder in Good Condition, Signs of Corrosion **(yes/no)**		
Clean-Out Covers Locked and Lock Functioning Properly **(yes/no)**		
Infiltration Trench 5 – Manhole		
Hatch Locked and Lock Functioning Properly **(yes/no)**		
Hatch in Good Condition and Functioning Properly **(yes/no)**		
Piping and Valves in Good Condition **(yes/no)**		
Top Clean-Out Isolation Valve is Closed and Bottom Clean-Out Isolation Valve is Open **(yes/no)**		
Conduit and Junction Box in Good Condition **(yes/no)**		
Water Present in the Bottom of the Manhole **(yes/no)**		
Ladder in Good Condition, Signs of Corrosion **(yes/no)**		
Clean-Out Covers Locked and Lock Functioning Properly **(yes/no)**		

Notes:

Extraction Well Weekly Log

Groundwater Remediation System
Former Tappan Terminal Site
Hastings on Hudson, New York

Date:	**Time:**	**Operator:**
Item Description		**Comments**
Extraction Well 1		
Pump Functioning Properly **(yes/no)**		
Pump Cycling or Running Continuous **(cycling/continuous)**		
Pipe Heat Trace Functioning Properly **(yes/no)**		
Pipe Insulation in Good Condition **(yes/no)**		
Abovegrade Piping/Connections Leaking		
Pump Run Time Meter Reading **(hours)**		
Pump Control Setting **(H/O/A)**		
Pump Throttled **(yes/no)**		
Influent Pressure **(psi)**		
Instantaneous Flow Rate **(gpm)**		
Totalized Flow **(gallons)**		
Extraction Well 2		
Pump Functioning Properly **(yes/no)**		
Pump Cycling or Running Continuous **(cycling/continuous)**		
Pipe Heat Trace Functioning Properly **(yes/no)**		
Pipe Insulation in Good Condition **(yes/no)**		
Abovegrade Piping/Connections Leaking		
Pump Run Time Meter Reading **(hours)**		
Pump Control Setting **(H/O/A)**		
Pump Throttled **(yes/no)**		
Influent Pressure **(psi)**		
Instantaneous Flow Rate **(gpm)**		
Totalized Flow **(gallons)**		

Notes:

Equipment Enclosure Weekly Log

Groundwater Remediation System
Former Tappan Terminal Site
Hastings on Hudson, New York

Date: **Time:**		**Operator:**
Item Description		**Comments**
Weekly Data Download		
Data Downloaded From PLC to Operators Computer **(yes/no)**		
T-200 Equalization Tank		
Tank/Bulkhead Fitting/Tank Connections Leaking **(yes/no)**		
Any Accumulated Solids **(yes/no)**		
If Applicable – Depth of Solids **(inches)**		
Water Level in Tank Held Constant **(yes/no)**		
If Applicable – Depth of Water **(feet)**		
Low-Low Level Switch Hanging Free of Obstruction **(yes/no)**		
High-High Level Switch Hanging Free of Obstruction **(yes/no)**		
Level Transducer Hanging Free of Obstruction **(yes/no)**		
Tank Access Lid Secure After Inspection **(yes/no)**		
P-200 Transfer Pump		
Pump Functioning Properly **(yes/no)**		
Pump/Pump Connections Leaking **(yes/no)**		
Pump Cycling or Running Continuous **(cycling/continuous)**		
Pump Run Time Meter Reading **(hours)**		
Pump Control Setting **(H/O/A)**		
Pump Throttled **(yes/no)**		
T-200/P-200 Recirculation Piping Open or Closed **(open/closed)**		
Instantaneous Flow Rate **(gpm)**		
Totalized Flow **(gallons)**		
Venturi Injection System		
Venturi Injector Bypass Open or Closed **(open/closed)**		
Inlet Pressure **(psi)**		
Venturi Injector/Connections Leaking **(yes/no)**		
Flash Reactor/Connections Leaking **(yes/no)**		
Outlet Pressure **(psi)**		
Motorized Ball Valve		
Valve and Pipe Connections Leaking **(yes/no)**		
Valve Opening **(P-200 Operating)**/Closing **(P-200 Not Operating)** with Respect to P-200 Operation **(yes/no)**		
Valve Control Setting **(H/O/A)**		
Battery Backup Fully Charged **(yes/no)**		
T-300 Decant Tank		
Tank/Bulkhead Fitting/Tank Connections Leaking **(yes/no)**		
Any Accumulated Solids **(yes/no)**		
If Applicable – Depth of Solids **(inches)**		
Water Level in Tank Held Constant **(yes/no)**		
If Applicable – Depth of Water **(feet)**		
Low-Low Level Switch Hanging Free of Obstruction **(yes/no)**		
High-High Level Switch Hanging Free of Obstruction **(yes/no)**		
Level Transducer Hanging Free of Obstruction **(yes/no)**		
Dissolved Oxygen Probe Hanging Free of Obstruction **(yes/no)**		
Dissolved Oxygen Reading **(ppm)**		
Dissolved Oxygen Probe Calibration Current **(yes/no)**		
Tank Access Lid Secure After Inspection **(yes/no)**		

Equipment Enclosure Weekly Log

Groundwater Remediation System
Former Tappan Terminal Site
Hastings on Hudson, New York

Date:	**Time:**	**Operator:**
Item Description		**Comments**
P-300 Injection Pump		
Pump Functioning Properly **(yes/no)**		
Pump/Pump Connections Leaking **(yes/no)**		
Pump Cycling or Running Continuous **(cycling/continuous)**		
Pump Run Time Meter Reading **(hours)**		
Pump Control Setting **(H/O/A)**		
Pump Throttled **(yes/no)**		
Instantaneous Flow Rate **(gpm)**		
Totalized Flow **(gallons)**		
Discharge Manifold		
Trench 1		
Totalized Effluent Flow **(gallons)**		
Discharge Pressure **(psi)**		
Discharge Location Throttled **(yes/no)**		
Trench 2		
Totalized Effluent Flow **(gallons)**		
Discharge Pressure **(psi)**		
Discharge Location Throttled **(yes/no)**		
Trench 3		
Totalized Effluent Flow **(gallons)**		
Discharge Pressure **(psi)**		
Discharge Location Throttled **(yes/no)**		
Trench 4		
Totalized Effluent Flow **(gallons)**		
Discharge Pressure **(psi)**		
Discharge Location Throttled **(yes/no)**		
Trench 5		
Totalized Effluent Flow **(gallons)**		
Discharge Pressure **(psi)**		
Discharge Location Throttled **(yes/no)**		
Injection Well 1		
Totalized Effluent Flow **(gallons)**		
Discharge Pressure **(psi)**		
Discharge Location Throttled **(yes/no)**		
Injection Well 2		
Totalized Effluent Flow **(gallons)**		
Discharge Pressure **(psi)**		
Discharge Location Throttled **(yes/no)**		
Injection Well 3		
Totalized Effluent Flow **(gallons)**		
Discharge Pressure **(psi)**		
Discharge Location Throttled **(yes/no)**		
Injection Well 4		
Totalized Effluent Flow **(gallons)**		
Discharge Pressure **(psi)**		
Discharge Location Throttled **(yes/no)**		

Equipment Enclosure Weekly Log

Groundwater Remediation System
Former Tappan Terminal Site
Hastings on Hudson, New York

Date: **Time:**		**Operator:**
Item Description		**Comments**
Equipment Enclosure Infrastructure		
Interior Lights Functioning Properly **(yes/no)**		
Exterior Lights Functioning Properly **(yes/no)**		
Heaters Functioning Properly **(yes/no)**		
Building Temperature **(°F)**		
Exhaust Fan Functioning Properly **(yes/no)**		
Louvers Functioning Properly **(yes/no)**		
Piping and Valves in Good Condition **(yes/no)**		
Equipment Enclosure Sump Level Switch Hanging Free of Obstruction **(yes/no)**		
Atmospheric Pressure Transmitter Reading **(hPa)**		
Atmospheric Pressure Transmitter Calibration Current **(yes/no)**		
Oxygen Sensor Reading		
Hydrogen Sulfide Sensor Reading		
LEL Sensor Reading		
Volatile Organic Compound Sensor Reading		
Exterior Mounted Communication Antenna in Good Condition **(yes/no)**		
Exterior Mounted Surveillance Cameras in Good Condition **(yes/no)**		
Exhaust Fan/Louvers Closed and Insulated During Cold Weather Periods **(yes/no)**		
Thermostat Set to 75 Degrees During Cold Weather Periods **(yes/no)**		
Overall Grounds of the Remediation System, Including Access Roads/Walkways Clear of Clutter, Debris and Snow **(yes/no)**		
Any Accumulated Waste Stored On Site **(yes/no)**		
Any Chemicals Stored On Site **(yes/no)**		

Notes:

Oxygen Amendment System Weekly Log

Groundwater Remediation System
Former Tappan Terminal Site
Hastings on Hudson, New York

Date: **Time:**		**Operator:**
Item Description		**Comments**
General		
Tubing and Valves in Good Condition **(yes/no)**		
Oxygen Flow Meter Reading **(scfh)**		
Any Leaks **(yes/no)**		
Oxygen Supply Pressure **(psi)**		
T-500 Air Compressor and T-600 Air Dryer		
Compressor Operating Properly **(yes/no)**		
Operation Control Setting **(on/off)**		
Compressor Preventative Maintenance Performed this Visit **(yes/no)**		
Filters Clean **(yes/no)**		
Any Leaks **(yes/no)**		
KCF in Good Condition **(yes/no)**		
KCF Hosing/Connections in Good Condition **(yes/no)**		
T-800 Oxygen Generator		
Generator Operating Properly **(yes/no)**		
Generator Preventative Maintenance Performed this Visit **(yes/no)**		
Any Leaks **(yes/no)**		
KCF in Good Condition **(yes/no)**		
KCF Hosing/Connections in Good Condition **(yes/no)**		
Operation Control Setting **(H/O/A)**		
T-900 Oxygen Receiving Tank		
Tank Pressure **(psi)**		
Valves and Pipes in Good Condition **(yes/no)**		
Any Leaks **(yes/no)**		
SV-900 Solenoid Valve		
Operation Control Setting **(H/O/A)**		
Valve Opening **(P-200 Operating)**/Closing **(P-200 Not Operating)** with Respect to P-200 Operation **(yes/no)**		
Any Leaks **(yes/no)**		

Notes:

Solids Settling Tank Weekly Log

Groundwater Remediation System
Former Tappan Terminal Site
Hastings on Hudson, New York

Date:	**Time:**	**Operator:**
Item Description		**Comments**
Piping and Surrounding Area		
Influent/Effluent Pipes and Connections in Good Condition **(yes/no)**		
Influent/Effluent Pipe Supports in Good Condition **(yes/no)**, Signs of Corrosion **(yes/no)**		
Influent/Effluent Pipe Heat Trace Functioning Properly **(yes/no)**		
Influent/Effluent Pipe Insulation in Good Condition **(yes/no)**		
Tank Anchor System in Good Condition **(yes/no)**		
Area Clear of Clutter **(yes/no)**		
T-400 Solids Settling Tank		
Tank/Bulkhead Fitting/Tank Connections Leaking **(yes/no)**		
Bottom Port Valve Closed **(yes/no)**		
Bottom Port Valve Leaking **(yes/no)**		

Notes:

Weekly Alarm Log

Groundwater Remediation System
Former Tappan Terminal Site
Hastings on Hudson, New York

Alarm Log	Date:	Operator:	
Alarm Description	**Comments**		**Time**

Weekly Maintenance Log

Groundwater Remediation System
Former Tappan Terminal Site
Hastings on Hudson, New York

Maintenance Log	Date:	Operator:	
General Facility Maintenance			
Extraction Wells			
T-200 Equalization Tank			
P-200 Transfer Pump			
Venturi Injector/Flash Reactor			

Weekly Maintenance Log

Groundwater Remediation System
Former Tappan Terminal Site
Hastings on Hudson, New York

Oxygen Delivery System (T-500, T-600, T-800, T-900, SV-900)
T-400 Solids Settling Tank
T-300 Decant Tank
P-300 Injection Pump
Discharge Manifold (Injection Wells/Trenches)
Building

Weekly Set Point Confirmation Log

Groundwater Remediation System
Former Tappan Terminal Site
Hastings on Hudson, New York

Date:	**Time:**	**Reviewer:**
Item Description	**Set Point**	**Comments**
Extraction Well 1		
LALL-100 Low-Low Level **(feet)**		
LT-100 High Level **(feet)**		
FAL-100 Low Flow **(gpm)**		
Extraction Well 2		
LALL-110 Low-Low Level **(feet)**		
LT-110 High Level **(feet)**		
FAL-110 Low Flow **(gpm)**		
T-200 Equalization Tank		
LALL-200 Low-Low Level **(feet)**		
LAHH-200 High-High Level **(feet)**		
P-200 Transfer Pump		
PAH-200 High Pressure **(psi)**		
FAL-201 Low Flow **(gpm)**		
Oxygen Amendment		
PAL-900 Low Pressure **(psi)**		
T-400 Solids Settling Tank		
LAHH-400 High-High Level **(feet)**		
T-300 Decant Tank		
LALL-300 Low-Low Level **(feet)**		
LAHH-300 High-High Level **(feet)**		
AAL-300 Low Dissolved Oxygen **(ppm)**		
P-300 Injection Pump		
PAH-300 High Pressure **(psi)**		
FAL-700 Low Flow **(gpm)**		
Trench 1		
LAHH-700 High-High Level **(feet)**		
Trench 2		
LAHH-701 High-High Level **(feet)**		
Trench 3		
LAHH-702 High-High Level **(feet)**		
Trench 4		
LAHH-703 High-High Level **(feet)**		
Trench 5		
LAHH-704 High-High Level **(feet)**		
Injection Well 1		
LAHH-705 High-High Level **(feet)**		
Injection Well 2		
LAHH-706 High-High Level **(feet)**		
Injection Well 3		
LAHH-707 High-High Level **(feet)**		
Injection Well 4		
LAHH-708 High-High Level **(feet)**		
Equipment Enclosure		
TAL-800 Low Building Temperature **(°F)**		
LAHH-800 High-High Level **(feet)**		
AAH-800 High Oxygen Concentration		

Notes:

Annual Alarm Testing Log

Groundwater Remediation System
Former Tappan Terminal Site
Hastings on Hudson, New York

Date:	**Time:**	**Reviewer:**
Item Description	**Test Result (Good/Bad)**	**Comments**
Extraction Well 1		
LALL-100 Low-Low Level		
FAL-100 Low Flow		
Extraction Well 2		
LALL-110 Low-Low Level		
FAL-110 Low Flow		
T-200 Equalization Tank		
LALL-200 Low-Low Level		
LAHH-200 High-High Level		
P-200 Transfer Pump		
PAH-200 High Pressure		
FAL-201 Low Flow		
YA-P-200 Auxiliary Contact Failure/VFD Fault		
Oxygen Amendment		
PAL-900 Low Pressure		
XCV-200 Motorized Valve		
ZA-200 Discord Alarm		
T-400 Solids Settling Tank		
LAHH-400 High-High Level		
T-300 Decant Tank		
LALL-300 Low-Low Level		
LAHH-300 High-High Level		
AAL-300 Low Dissolved Oxygen		
P-300 Injection Pump		
PAH-300 High Pressure		
FAL-700 Low Flow		
YA-P-300 Auxiliary Contact Failure/VFD Fault		
Trench 1		
LAHH-700 High-High Level		
Trench 2		
LAHH-701 High-High Level		
Trench 3		
LAHH-702 High-High Level		
Trench 4		
LAHH-703 High-High Level		
Trench 5		
LAHH-704 High-High Level		
Injection Well 1		
LAHH-705 High-High Level		
Injection Well 2		
LAHH-706 High-High Level		
Injection Well 3		
LAHH-707 High-High Level		
Injection Well 4		
LAHH-708 High-High Level		
Equipment Enclosure		
TAL-800 Low Building Temperature		
LAHH-800 High-High Level		
AAH-800 High Oxygen Concentration		

Notes:

Equipment Replacement Tracking Log

Groundwater Remediation System
Former Tappan Terminal Site
Hastings on Hudson, New York

Equipment	Reason for Replacement	Date	Lead Time	Manufacturer	Vendor

Appendix F

Material Safety Data Sheets

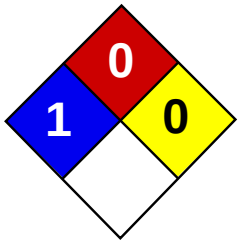

Health	2
Fire	0
Reactivity	0
Personal Protection	H

Material Safety Data Sheet
Hydrogen Peroxide - 3% MSDS

Section 1: Chemical Product and Company Identification

Product Name: Hydrogen Peroxide - 3%

Catalog Codes: SLH2497, SLH1180

CAS#: Mixture.

RTECS: Not applicable.

TSCA: TSCA 8(b) inventory: Water; Hydrogen Peroxide

CI#: Not applicable.

Synonym: Hydrogen Peroxide 3% Solution; Hydrogen Peroxide Topical Solution

Chemical Name: Not applicable.

Chemical Formula: Not applicable.

Contact Information:

Sciencelab.com, Inc.
14025 Smith Rd.
Houston, Texas 77396

US Sales: **1-800-901-7247**
International Sales: **1-281-441-4400**

Order Online: ScienceLab.com

CHEMTREC (24HR Emergency Telephone), call: 1-800-424-9300

International CHEMTREC, call: 1-703-527-3887

For non-emergency assistance, call: 1-281-441-4400

Section 2: Composition and Information on Ingredients

Composition:

Name	CAS #	% by Weight
Water	7732-18-5	97
Hydrogen Peroxide	7722-84-1	3

Toxicological Data on Ingredients: Hydrogen Peroxide: ORAL (LD50): Acute: 2000 mg/kg [Mouse]. DERMAL (LD50): Acute: 4060 mg/kg [Rat]. 2000 mg/kg [pig]. VAPOR (LC50): Acute: 2000 mg/m 4 hours [Rat].

Section 3: Hazards Identification

Potential Acute Health Effects:
Hazardous in case of eye contact (irritant). Slightly hazardous in case of skin contact (irritant, permeator), of ingestion, of inhalation (lung sensitizer). Non-corrosive for skin. Non-corrosive to the eyes. Non-corrosive for lungs. Prolonged exposure may result in skin burns and ulcerations. Over-exposure by inhalation may cause respiratory irritation.

Potential Chronic Health Effects:
CARCINOGENIC EFFECTS: Classified A3 (Proven for animal.) by ACGIH [Hydrogen Peroxide]. MUTAGENIC EFFECTS: Mutagenic for mammalian somatic cells. [Hydrogen Peroxide]. Mutagenic for bacteria and/or yeast. [Hydrogen Peroxide]. TERATOGENIC EFFECTS: Not available. DEVELOPMENTAL TOXICITY: Not available. The substance may be toxic to blood, upper respiratory tract, skin, eyes, central nervous system (CNS). Repeated or prolonged exposure to the substance can produce target organs damage.

Section 4: First Aid Measures

Eye Contact:
Check for and remove any contact lenses. In case of contact, immediately flush eyes with plenty of water for at least 15 minutes. Cold water may be used. Get medical attention.

Skin Contact:
In case of contact, immediately flush skin with plenty of water. Cover the irritated skin with an emollient. Remove contaminated clothing and shoes. Cold water may be used.Wash clothing before reuse. Thoroughly clean shoes before reuse. Get medical attention.

Serious Skin Contact:
Wash with a disinfectant soap and cover the contaminated skin with an anti-bacterial cream. Seek medical attention.

Inhalation:
If inhaled, remove to fresh air. If not breathing, give artificial respiration. If breathing is difficult, give oxygen. Get medical attention if symptoms appear.

Serious Inhalation: Not available.

Ingestion:
Do NOT induce vomiting unless directed to do so by medical personnel. Never give anything by mouth to an unconscious person. Loosen tight clothing such as a collar, tie, belt or waistband. Get medical attention if symptoms appear.

Serious Ingestion: Not available.

Section 5: Fire and Explosion Data

Flammability of the Product: Non-flammable.

Auto-Ignition Temperature: Not applicable.

Flash Points: Not applicable.

Flammable Limits: Not applicable.

Products of Combustion: Not available.

Fire Hazards in Presence of Various Substances: Not applicable.

Explosion Hazards in Presence of Various Substances:
Non-explosive in presence of open flames and sparks, of shocks, of heat, of reducing materials, of combustible materials, of organic materials, of metals, of acids, of alkalis.

Fire Fighting Media and Instructions: Not applicable.

Special Remarks on Fire Hazards:
Most cellulose (wood, cotton) materials contain enough catalyst to cause spontaneous ignition with 90% Hydrogen Peroxide. Hydrogen Peroxide is a strong oxider. It is not flammable itself, but it can cause spontaneous combustion of flammable materials and continued support of the combustion because it liberates oxygen as it decomposes. Hydrogen peroxide mixed with magnesium and a trace of magnesium dioxide will ignite immediately.

Special Remarks on Explosion Hazards:
Soluble fuels (acetone, ethanol, glycerol) will detonate on a mixture with peroxide over 30% concentration, the violence increasing with concentration. Explosive with acetic acid, acetic anhydride, acetone, alcohols, carboxylic acids, nitrogen containing bases, As2S3, Cl2 + KOH, FeS, FeSO4 + 2 methylpryidine + H2SO4, nitric acid, potassium permanganate, P2O5, H2Se, Alcohols + H2SO4, Alcohols + tin chloride, Antimoy trisulfide, chlorosulfonic acid, Aromatic hydrocarbons + trifluoroacetic acid, Azeliac acid + sulfuric acid (above 45 C), Benzenesulfonic anhydride, tert-butanol + sulfuric acid, Hydrazine, Sulfuric acid, Sodium iodate, Tetrahydrothiophene, Thiodiglycol, Mercurous oxide, mercuric oxide, Lead dioxide, Lead oxide, Manganese dioxide, Lead sulfide, Gallium + HCl, Ketenes + nitric acid, Iron (II) sulfate + 2-methylpyridine + sulfuric acid, Iron (II) sulfate + nitric acid, + sodium carboxymethylcellulose (when

Section 6: Accidental Release Measures

Small Spill:
Dilute with water and mop up, or absorb with an inert dry material and place in an appropriate waste disposal container. Finish cleaning by spreading water on the contaminated surface and dispose of according to local and regional authority requirements.

Large Spill:
Absorb with an inert material and put the spilled material in an appropriate waste disposal. Finish cleaning by spreading water on the contaminated surface and allow to evacuate through the sanitary system. Be careful that the product is not present at a concentration level above TLV. Check TLV on the MSDS and with local authorities.

Section 7: Handling and Storage

Precautions:
Keep locked up.. Do not ingest. Do not breathe gas/fumes/ vapor/spray. Wear suitable protective clothing. In case of insufficient ventilation, wear suitable respiratory equipment. If ingested, seek medical advice immediately and show the container or the label. Avoid contact with skin and eyes.

Storage:
Keep container tightly closed. Keep container in a cool, well-ventilated area. Separate from acids, alkalies, reducing agents and combustibles. See NFPA 43A, Code for the Storage of Liquid and Solid Oxidizers. Do not store above 30°C (86°F). Sensitive to light. Store in light-resistant containers.

Section 8: Exposure Controls/Personal Protection

Engineering Controls:
Provide exhaust ventilation or other engineering controls to keep the airborne concentrations of vapors below their respective threshold limit value.

Personal Protection:
Splash goggles. Lab coat. Vapor respirator. Be sure to use an approved/certified respirator or equivalent. Gloves.

Personal Protection in Case of a Large Spill:
Splash goggles. Full suit. Vapor respirator. Boots. Gloves. A self contained breathing apparatus should be used to avoid inhalation of the product. Suggested protective clothing might not be sufficient; consult a specialist BEFORE handling this product.

Exposure Limits:

Section 9: Physical and Chemical Properties

Physical state and appearance: Liquid.

Odor: Not available.

Taste: Bitter.

Molecular Weight: Not applicable.

Color: Colorless. Clear

pH (1% soln/water): Neutral.

Boiling Point: The lowest known value is 100°C (212°F) (Water). Weighted average: 101.56°C (214.8°F)

Melting Point: May start to solidify at -0.43°C (31.2°F) based on data for: Hydrogen Peroxide.

Critical Temperature: Not available.

Specific Gravity: Weighted average: 1.01 (Water = 1)

Vapor Pressure: The highest known value is 2.3 kPa (@ 20°C) (Water). Weighted average: 2.24 kPa (@ 20°C)

Vapor Density: The highest known value is 1.2 (Air = 1) (Hydrogen Peroxide). Weighted average: 0.64 (Air = 1)

Volatility: Not available.

Odor Threshold: Not available.

Water/Oil Dist. Coeff.: Not available.

Ionicity (in Water): Not available.

Dispersion Properties: See solubility in water, diethyl ether.

Solubility: Soluble in cold water, diethyl ether.

Section 10: Stability and Reactivity Data

Stability: The product is stable.

Instability Temperature: Not available.

Conditions of Instability: Light, excess heat, combustible materials, incompatible materials (Hydrogen Peroxide)

Incompatibility with various substances: Slightly reactive to reactive with reducing agents, combustible materials, organic materials, metals, acids, alkalis.

Corrosivity: Non-corrosive in presence of glass.

Special Remarks on Reactivity:
Light Sensitive. Incompatible with reducing materials, ethers (dioxane, furfuran), oxidizing materials, Metals(eg. potassium, sodium lithium, iron, copper, brass, bronze, chromium, zinc, lead, silver), metal oxides (eg. cobalt oxide, iron oxide, lead oxide, lead hydroxide, manganese oxide), metal salts (eg. calcium permanganate), manganese, asbestos, vanadium, platinium, tungsten, molybdeum, triethylamine, palladium, sodium pyrophosphate, carboxylic acids, cyclopentadiene, formic acid, rust, ketones, cyanides, sodium carbonate alcohols, sodium borate, aniline, mercurous chloride, rust sodium pyrophosphate, hexavalent chromium compounds, tetrahydrofuran, sodium fluoride organic matter, potassium permanganate, urea, chlorosulfonic acid, manganese dioxide, hydrogen selenide, charcoal, coal, sodium borate, alkalies, cyclopentadiene, glycerine. Caused to decompose catalytically by metals (in order of decreasing effectiveness): Osmium, Palladium, Platinum, Iridium, Gold, Silver, Manganese, Cobalt, Copper, Lead (Hydrogen Peroxide) A solution of 3% Hydrogen peroxide is also incompatible with: Albumin, Alkali citrates, Balsam Peru, Phenol, Tinctures, and Lime water

Special Remarks on Corrosivity: Not available.

Polymerization: Will not occur.

Section 11: Toxicological Information

Routes of Entry: Absorbed through skin. Eye contact.

Toxicity to Animals:
Acute oral toxicity (LD50): 66667 mg/kg (Mouse) (Calculated value for the mixture). Acute dermal toxicity (LD50): 66667 mg/kg (pig) (Calculated value for the mixture).

Chronic Effects on Humans:
CARCINOGENIC EFFECTS: Classified A3 (Proven for animal.) by ACGIH [Hydrogen Peroxide]. Classified 3 (Not classifiable for human.) by IARC [Hydrogen Peroxide]. MUTAGENIC EFFECTS: Mutagenic for mammalian somatic cells. [Hydrogen Peroxide]. Mutagenic for bacteria and/or yeast. [Hydrogen Peroxide]. Contains material which may cause damage to the following organs: blood, upper respiratory tract, skin, eyes, central nervous system (CNS).

Other Toxic Effects on Humans:
Slightly hazardous in case of skin contact (irritant, permeator), of ingestion, of inhalation (lung sensitizer). Non-corrosive for skin. Non-corrosive to the eyes. Non-corrosive for lungs.

Special Remarks on Toxicity to Animals: Not available.

Special Remarks on Chronic Effects on Humans:
May may affect genetic material. May cause cancer (be tumorigenic) based on animal data. IARC states that there is either no adequate human data or inadequate evidence for carcinogenicity in humans. (Hydrogen Peroxide)

Special Remarks on other Toxic Effects on Humans:
Acute Potential Health Effects: Skin: May cause skin irritation. May cause reddening of the skin and temporary discoloration/ whitening of the skin. Absorption into skin may affect behavior, brain, respiration (pulmonary edema) Eyes: Causes eye irritation. Symptoms may include burning sensation, redness, inflammaton, pain and possible corneal edema, and corneal cloudiness. Vapors may cause eye irritation. Inhalation: Not expected to be a health hazard under normal conditions. May cause respiratory tract and mucous membrane irritation with coughing, laryngitis, bronchitis, pulmonary edema. May affect respiration (dyspnea). May also cause headache, nausea, and vomiting. Ingestion: Ingestion of large doses may cause digestive tract/gastrointestinal tract irritation (irritation or possible blistering of the tongue, buccal muosa/mouth, throat, and stomach) with nausea, vomiting, hypermotility, and diarrhea. May cause difficulty in swallowing, stomach distension. May affect blood (change in leukocyte count, pigmented or nucleated red blood cells). May affect behavior/central nervous system. May affect cardiovascular system and cause vascular collapse and damage. Chronic Potential Health Effects: Prolonged or repeated skin contact may cause dermatitis. Prolonged or repeated ingestion may affect metabolism (weight loss). Prolonged or repeated inhalation may affect respiration, blood. Continue use of hydrogen peroxide solution as a mouth wash, even at half-strength, may cause hypertrophied filiform papillae of the tongue ("hairy tongue"). But these disappear after it is discontinued

Section 12: Ecological Information

Ecotoxicity: Not available.

BOD5 and COD: Not available.

Products of Biodegradation:
Possibly hazardous short term degradation products are not likely. However, long term degradation products may arise.

Toxicity of the Products of Biodegradation: The product itself and its products of degradation are not toxic.

Special Remarks on the Products of Biodegradation: Not available.

Section 13: Disposal Considerations

Waste Disposal:
Waste must be disposed of in accordance with federal, state and local environmental control regulations.

Section 14: Transport Information

DOT Classification: Not a DOT controlled material (United States).

Identification: Not applicable.

Special Provisions for Transport: Not applicable.

Section 15: Other Regulatory Information

Federal and State Regulations:
New York acutely hazardous substances: Hydrogen Peroxide Rhode Island RTK hazardous substances: Hydrogen Peroxide Pennsylvania RTK: Hydrogen Peroxide Florida: Hydrogen Peroxide Minnesota: Hydrogen Peroxide Massachusetts RTK: Hydrogen Peroxide New Jersey: Hydrogen Peroxide TSCA 8(b) inventory: Hydrogen Peroxide

Other Regulations: OSHA: Hazardous by definition of Hazard Communication Standard (29 CFR 1910.1200).

Other Classifications:

WHMIS (Canada): CLASS C: Oxidizing material.

DSCL (EEC):
This product is not classified according to the EU regulations. Not applicable.

HMIS (U.S.A.):

Health Hazard: 2

Fire Hazard: 0

Reactivity: 0

Personal Protection: h

National Fire Protection Association (U.S.A.):

Health: 1

Flammability: 0

Reactivity: 0

Specific hazard:

Protective Equipment:
Gloves. Lab coat. Vapor respirator. Be sure to use an approved/certified respirator or equivalent. Splash goggles.

Section 16: Other Information

References: Not available.

Other Special Considerations: Not available.

Created: 10/09/2005 05:46 PM

Last Updated: 06/09/2012 12:00 PM

The information above is believed to be accurate and represents the best information currently available to us. However, we make no warranty of merchantability or any other warranty, express or implied, with respect to such information, and we assume no liability resulting from its use. Users should make their own investigations to determine the suitability of the information for their particular purposes. In no event shall ScienceLab.com be liable for any claims, losses, or damages of any third party or for lost profits or any special, indirect, incidental, consequential or exemplary damages, howsoever arising, even if ScienceLab.com has been advised of the possibility of such damages.

MATERIAL SAFETY DATA SHEET

KAESER COMPRESSORS
Built for a lifetime.™

Date Issued: 02/01/2013
MSDS No: KAESER SIGMA FG-460 022307
Date Revised: 02/02/2013
Revision No: 1

SIGMA Lubricant FG-460

1. PRODUCT AND COMPANY IDENTIFICATION

PRODUCT NAME: SIGMA Lubricant FG-460
GENERAL USE: Lubricant and corrosion inhibitor
CHEMICAL FAMILY: Synthetic based lubricant

MANUFACTURER
Manufactured for Kaeser Compressors, Inc.
511 Sigma Drive
Fredericksburg, VA 22408
Product Stewardship: 281-354-8600

24 HR. EMERGENCY TELEPHONE NUMBERS
USA : 800-424-9300
International : 703-527-3887(collect calls accepted)

2. HAZARDS IDENTIFICATION

POTENTIAL HEALTH EFFECTS

EYES: May cause irritation.

SKIN: May irritate the skin after prolonged periods of contact.

INGESTION: May cause diarrhea.

INHALATION: Hydrocarbon mist may line breathing passages with oil making breathing difficult.

3. COMPOSITION / INFORMATION ON INGREDIENTS

Chemical Name	Wt.%	CAS
Poly Alpha Olefin Synthetic	96 - 99	68037-01-4
Synthetic Corrosion and Antiwear	0.5 - 1	80939-62-4
Synthetic Oxidation Inhibitor	0.2 - 0.5	41484-35-9
Synthetic Ashless EP Additive	0.1 - 0.5	10254-57-6
Mixed Alkyl Diphenyl Amine	0.1 - 0.3	68411-46-1

COMMENTS: This product contains no hazardous substances within the definition of OSHA Regulation 29 CFR 1910.1200.

4. FIRST AID MEASURES

EYES: Flush with water until all residual material is gone. If irritation persists, seek medical help.

SKIN: Wash thoroughly with hand cleanser, followed by soap and water. Contaminated clothing should be dry cleaned before reuse.

INGESTION: Wash out mouth immediately. Do not induce vomiting. Consult physician.

INHALATION: Clear air passage. If respiratory difficulty continues, seek medical help.

5. FIRE FIGHTING MEASURES

FLASH POINT AND METHOD: 257°C (495°F) COC

AUTOIGNITION TEMPERATURE: > 315°C (600°F)

EXTINGUISHING MEDIA: Foam, dry powder, Halon®, carbon dioxide, sand, earth and water mist. Unsuitable: Water jet.

OTHER CONSIDERATIONS: Not flammable at ambient temp.

FIRE FIGHTING EQUIPMENT: Self-contained breathing apparatus.

6. ACCIDENTAL RELEASE MEASURES

SMALL SPILL: Contain spill and keep from entering waterways. Absorb on porous material. Large quantities can be pumped.

ENVIRONMENTAL PRECAUTIONS

LAND SPILL: Do not allow it to enter drains.

SPECIAL PROTECTIVE EQUIPMENT: Wear gloves and protective overalls.

7. HANDLING AND STORAGE

HANDLING: No special handling precautions necessary.

STORAGE: Do not store at elevated temperatures.

8. EXPOSURE CONTROLS / PERSONAL PROTECTION

PERSONAL PROTECTIVE EQUIPMENT

EYES AND FACE: Glasses, if applied to parts in motion.

SKIN: Oil-proof gloves for hypersensitive persons.

RESPIRATORY: Hydrocarbon absorbing respirator if misting.

PROTECTIVE CLOTHING: Overalls.

9. PHYSICAL AND CHEMICAL PROPERTIES

PHYSICAL STATE: Liquid

ODOR: Mild Hydrocarbon

COLOR: Clear

pH: Neutral

PERCENT VOLATILE: None

VAPOR PRESSURE: < 0.01

VAPOR DENSITY: Greater than air

BOILING POINT: > 371°C (700°F)

POUR POINT: < -35°C

FLASH POINT AND METHOD: 257°C (495°F) COC

EVAPORATION RATE: Negligible

DENSITY: > 0.8

OXIDIZING PROPERTIES: None

10. STABILITY AND REACTIVITY

STABILITY: Chemically stable under normal conditions. No photoreactive agents.

CONDITIONS TO AVOID: Powerful sources of ignition and extreme temperatures.

HAZARDOUS DECOMPOSITION PRODUCTS: Burning generates smoke, airborne soot, hydrocarbons and oxides of carbon, sulfur and nitrogen. Residue mainly comprised of soot and mineral oxides.

INCOMPATIBLE MATERIALS: Strong inorganic and organic acids, oxidizing agents.

11. TOXICOLOGICAL INFORMATION

ACUTE

ORAL LD_{50}: > 2000 mg/kg

Notes: Extrapolated from component data

INHALATION LC_{50}: Not applicable.

SKIN EFFECTS: Very mild

CHRONIC: None known.

SUBCHRONIC: Not known

CARCINOGENICITY

IARC: No

NTP: No

OSHA: No

SENSITIZATION: Not known

12. ECOLOGICAL INFORMATION

ENVIRONMENTAL DATA: Due to its fluid nature and specific gravity, this product will float or spread across water making it a nuisance contaminant. It is not thought to be toxic to marine or land organisms.

BIOACCUMULATION/ACCUMULATION: Relatively well behaved. Bioaccumulation potential nil.

13. DISPOSAL CONSIDERATIONS

DISPOSAL METHOD: Consider recycling. This product, as sold, does not meet the RCRA characteristics of a hazardous waste. Under RCRA, it is the responsibility of the user, at the time of disposal, to determine whether the product meets the RCRA criteria for hazardous waste. Contact a waste disposal company or local authority for advice.

EMPTY CONTAINER: See waste disposal section listed above.

14. TRANSPORT INFORMATION

DOT (DEPARTMENT OF TRANSPORTATION)

UN/NA NUMBER: N/A

OTHER SHIPPING INFORMATION: Nonhazardous

ROAD AND RAIL (ADR/RID): Bulk Nonhazardous

AIR (ICAO/IATA): Bulk Nonhazardous

VESSEL (IMO/IMDG): Bulk Nonhazardous

15. REGULATORY INFORMATION

UNITED STATES

SARA TITLE III (SUPERFUND AMENDMENTS AND REAUTHORIZATION ACT)

311/312 HAZARD CATEGORIES: None

313 REPORTABLE INGREDIENTS: N/A

CERCLA (COMPREHENSIVE RESPONSE, COMPENSATION, AND LIABILITY ACT)

CERCLA REGULATORY: Nonhazardous

TSCA (TOXIC SUBSTANCE CONTROL ACT)

TSCA REGULATORY: All components are listed

CALIFORNIA PROPOSITION 65: N/A

CANADA

WHMIS (WORKPLACE HAZARDOUS MATERIALS INFORMATION SYSTEM): Not regulated

DOMESTIC SUBSTANCE LIST (INVENTORY): All components are listed

16. OTHER INFORMATION

REVISION SUMMARY: Revision #: 1. This MSDS replaces the February 1, 2013 MSDS. Any changes in information are as follows: In Section 1: Approval Date, Date Prepared; In Section 3: List of Ingredients

HMIS RATING

HEALTH:	**0**
FLAMMABILITY:	**1**
PHYSICAL HAZARD:	**0**
PERSONAL PROTECTION:	

NFPA CODES

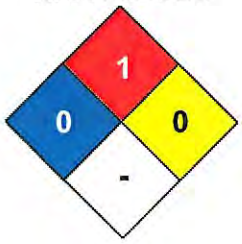

MANUFACTURER DISCLAIMER: As of issue date, the information contained herein is accurate and reliable to the best of our knowledge. We do not warrant or guarantee its accuracy or reliability and shall not be liable for any loss or damage arising out of the use thereof. It is the user's responsibility to satisfy itself that the information offered for its consideration is suitable for its particular use.

Intermountain Specialty Gases

520 North Kings Rd, Nampa, Idaho 83687
Phone: 800-552-5003 Fax: 208-466-9143

Material Safety Data Sheet

Issue Date: Jan. 2006 Chemtrec 1-800-424-9300
Reviewed: February 2011

1. CHEMICAL PRODUCT

PRODUCT NAME: Air, Compressed SYNONYMS: Oxygen/Nitrogen

2. COMPOSITION, INFORMATION ON INGREDIENTS

Ingredient Name	Formula	CAS#	Concentration	TLV
(Air – Synthetic)				
Oxygen	O2	7782-44-7	19.5.% - 23.0%	N/A
Nitrogen	N2	7727-37-9	Balance	S/A

3. HAZARD IDENTIFICATION

POTENTIAL HEALTH EFFECTS: None Known

ROUTES OF ENTRY: Inhalation

ACUTE EFFECTS: None Known

CHRONIC EFFECTS: None Known

MEDICAL CONDITIONS AGGRAVATED BY OVEREXPOSURE: None Known

OTHER EFFECTS OF OVEREXPOSURE: Contact with rapidly expanding gas near the point of release may cause frostbite.

OSHA Regulatory Status: This material is classified as hazardous under OSHA regulations.

Carcinogenicity (US Only):
NTP – No
IARC MONOGRAPHS - No
OSHA REGULATED – No

NFPA Hazard Codes:		**HMIS Hazard Codes:**		**Rating System**
Health:	0	Health:	0	0 = No Hazard
Flammability:	0	Flammability:	0	1 = Slight Hazard
Instability:	0	Physical Hazard:	3	2 = Moderate Hazard
				3 = Serious Hazard
				4 = Severe Hazard

4. FIRST AID MEASURES

Inhalation: Immediately remove victim to fresh air. If breathing has stopped, give artificial respiration. If breathing is difficult, give oxygen.

Eye Contact: Immediately flush with copious amounts of water for at least 15 minutes.

Skin contact: Immediately flush with copious amount of water for at least 15 minutes.

Ingestion: None\

5. FIRE FIGHTING MEASURES

Flash Point: N/Ap Gas

Autoignition Temperature: N/Ap

Flammable Limits: Nonflammable Gas
Lower:
Upper:

Extinguishing Media: Use what is appropriate for surrounding fire.

Special Fire fighting Instruction and Equipment: Wear self-contained breathing apparatus and full protective clothing. Keep fire from exposed cylinders and cool with water spray, If possible, stop the product flow.

Hazardous Combustion Products: None

Unusual Fire and Explosion Hazards: Cylinder rupture may occur under fire conditions.

6. ACCIDENTAL RELEASE MEASURES

Clean Up Procedures: Evacuate and ventilate area. Remove leaking cylinder to exhaust hood or safe outdoor area. Shut off cylinder if possible.

Specialized Equipment: None

7. HANDLING AND STORAGE

Precautions To Be Taken In Handling: Secure cylinder when using to protect from falling.
Precautions To Be Taken In Storage: Protect cylinders from physical damage. Store in cool, dry, well ventilated area. Do not allow the temperature where cylinders are stored to exceed 125 degrees F.

8. EXPOSURE CONTROLS/PERSONAL PROTECTION

Engineering Controls: Provide adequate general and local exhaust ventilation to maintain concentrations below exposure limits and to avoid asphyxiation.

Eye/Face Protection: Safety goggles or glasses as appropriate for the job.

Skin Protection: Protective gloves of material appropriate for the job.

Respiratory Protection: In case of leakage, use of self-contained breathing apparatus should be available for emergency use.

Other Protective Equipment: Safety Shoes

9. PHYSICAL AND CHEMICAL PROPERTIES

Appearance: Colorless
Odor: Odorless
Physical State: Gas
Vapor Pressure: N/Ap
Vapor Density (Air = 1): 1.00
Boiling Point (C): N/Ap
Solubility In Water: Slightly
Specific Gravity (H2O-1): Gas
Evaporation Rate: Gas
Odor Threshold: N/A

10. STABILITY AND REACTIVITY

Stability: Stable under normal storage conditions.
Conditions To Avoid: Storage in poorly ventilated areas. Storage near a heat source.
Hazardous Polymerization: Will not occur.
Hazardous Decomposition: none

11. TOXICOLOGICAL INFORMATION

Lethal Concentration: N/Ap
Established lethal Dose: N/Ap
Teratogenicity: N/Ap
Reproductive Effects: N/Ap
Mutagenicity: N/Ap

12. ECOLOGICAL INFORMATION

Product does not contain Class I or Class II ozone depleting substances. Not toxic. Not expected to be toxic to fish and wildlife. Will not bioconcentrate.

13. DISPOSAL CONSIDERATIONS

Waste Disposal Method: Dispose of non-refillable cylinders in accordance with federal, state and local regulations. Allow gas to vent slowly to atmosphere in an unconfined area or exhaust hood, or return to Intermountain Specialty Gases.

14. TRANSPORT INFORMATION

Proper Shipping Name: Air, Compressed
Hazard Class: 2.2
Identification Number: UN 1002
Shipping Label: Nonflammable Gas

15. REGULATORY INFORMATION

SARA Title III Notifications and Information:

This product does not contain toxic chemicals subject to reporting requirements of section 313 of the Emergency planning and Community Right-To-Know Act (EPCRA) of 1986 and of 40 CFR 372.

SARA Title III – Hazard classes:

Sudden Release of Pressure Hazard

California Proposition 65:
This product does not contain ingredients (s) Known to the State of California to cause cancer or reproductive toxicity.

15a. AGENCIES AND TERMS WHICH MAY BE PERTINENT TO THIS PRODUCT

SARA	Superfund Amendments and Reauthorization Act
OSHA	Occupational Safety and Health Administration
DOT	Department of Transportation
TSCA	Toxic Substance Control Act
NTP	National Toxicology Program
ACGIH	American Conference of Governmental Industrial Hygienists
PEL	Permissible Exposure Limit
STEL	Short Term Exposure Limit
TLV	Threshold Limit Value
TDG	Transportation of Dangerous Goods

16. OTHER INFORMATION

Other Precautions: Protect containers from physical damage. Do not deface cylinders or labels.

Abbreviations:
N/Ap – Not Applicable
N/Av – Not Available
SA – Simple Asphyxiant

DISCLAIMER OF EXPRESSED AND IMPLIED WARRANTIES:
Although reasonable care has been taken in the preparation of this document, we extend no warranties and make no representations as to the accuracy or completeness of the information contained herein, and assume no responsibility regarding the suitability of this information for the user's intended purposes or for the consequences of its use. Each individual should make a determination as to the suitability of the information for their particular purpose (s).

Intermountain Specialty Gases

520 North Kings Rd, Nampa, Idaho 83687
Phone: 800-552-5003 Fax: 208-466-9143

Material Safety Data Sheet

Issue Date: Jan. 2006 Chemtrec 1-800-424-9300
Reviewed: March 2012

1. CHEMICAL PRODUCT

PRODUCT NAME: Isobutylene/Air SYNONYMS: Isobutylene/Air

2. COMPOSITION, INFORMATION ON INGREDIENTS

Ingredient Name	Formula	CAS#	Concentration	TLV
Isobutylene	C4H8	115-11-7	5 ppm -0.9%	S/A
Oxygen	O2	7782-44-7	12.0% - 21.0%	N/A
Nitrogen	N2	7727-37-9	Balance	S/A

3. HAZARD IDENTIFICATION

POTENTIAL HEALTH EFFECTS: None Known

ROUTES OF ENTRY: Inhalation

ACUTE EFFECTS: None Known

CHRONIC EFFECTS: None Known

MEDICAL CONDITIONS AGGRAVATED BY OVEREXPOSURE: None Known

OTHER EFFECTS OF OVEREXPOSURE: Contact with rapidly expanding gas near the point of release may cause frostbite.

OSHA Regulatory Status: This material is classified as hazardous under OSHA regulations.

Carcinogenicity (US Only):
NTP – No
IARC MONOGRAPHS - No
OSHA REGULATED – No

NFPA Hazard Codes:		**HMIS Hazard Codes:**		**Rating System**
Health:	0	Health:	0	0 = No Hazard
Flammability:	0	Flammability:	0	1 = Slight Hazard
Instability:	0	Physical Hazard:	3	2 = Moderate Hazard
				3 = Serious Hazard
				4 = Severe Hazard

4. FIRST AID MEASURES

Inhalation: Immediately remove victim to fresh air. If breathing has stopped, give artificial respiration. If breathing is difficult, give oxygen.

Eye Contact: Immediately flush with copious amounts of water for at least 15 minutes.

Skin contact: Immediately flush with copious amount of water for at least 15 minutes.

Ingestion: None\

5. FIRE FIGHTING MEASURES

Flash Point: N/Ap Gas

Autoignition Temperature: N/Ap

Flammable Limits: Nonflammable Gas
Lower:
Upper:

Extinguishing Media: Use what is appropriate for surrounding fire.

Special Fire fighting Instruction and Equipment: Wear self-contained breathing apparatus and full protective clothing. Keep fire from exposed cylinders and cool with water spray, If possible, stop the product flow.

Hazardous Combustion Products: None

Unusual Fire and Explosion Hazards: Cylinder rupture may occur under fire conditions.

6. ACCIDENTAL RELEASE MEASURES

Clean Up Procedures: Evacuate and ventilate area. Remove leaking cylinder to exhaust hood or safe outdoor area. Shut off cylinder if possible.
Specialized Equipment: None

7. HANDLING AND STORAGE

Precautions To Be Taken In Handling: Secure cylinder when using to protect from falling.
Precautions To Be Taken In Storage: Protect cylinders from physical damage. Store in cool, dry, well ventilated area. Do not allow the temperature where cylinders are stored to exceed 125 degrees F.

8. EXPOSURE CONTROLS/PERSONAL PROTECTION

Engineering Controls: Provide adequate general and local exhaust ventilation to maintain concentrations below exposure limits and to avoid asphyxiation.

Eye/Face Protection: Safety goggles or glasses as appropriate for the job.

Skin Protection: Protective gloves of material appropriate for the job.

Respiratory Protection: In case of leakage, use of self-contained breathing apparatus should be available for emergency use.

Other Protective Equipment: Safety Shoes

9. PHYSICAL AND CHEMICAL PROPERTIES

Appearance: Colorless
Odor: Mild Sweetish Odor
Physical State: Gas
Vapor Pressure: N/Ap
Vapor Density (Air = 1): 1.0 - 1.001
Boiling Point (C): N/Ap
Solubility In Water: Slightly
Specific Gravity (H2O-1): Gas
Evaporation Rate: Gas
Odor Threshold: N/A

10. STABILITY AND REACTIVITY

Stability: Stable under normal storage conditions.
Conditions To Avoid: Storage in poorly ventilated areas. Storage near a heat source.
Hazardous Polymerization: Will not occur.
Hazardous Decomposition: none

11. TOXICOLOGICAL INFORMATION

Lethal Concentration: N/Ap
Established lethal Dose: N/Ap
Teratogenicity: N/Ap
Reproductive Effects: N/Ap
Mutagenicity: N/Ap

12. ECOLOGICAL INFORMATION

Product does not contain Class I or Class II ozone depleting substances. Not toxic. Not expected to be toxic to fish and wildlife. Will not bioconcentrate.

13. DISPOSAL CONSIDERATIONS

Waste Disposal Method: Dispose of non-refillable cylinders in accordance with federal, state and local regulations. Allow gas to vent slowly to atmosphere in an unconfined area or exhaust hood, or return to Intermountain Specialty Gases.

14. TRANSPORT INFORMATION

Proper Shipping Name: Compressed Gas N.O.S. (Isobutylene, Nitrogen) or
(Isobutylene, Air)
Hazard Class: 2.2
Identification Number: UN 1956
Shipping Label: Nonflammable Gas

15. REGULATORY INFORMATION

SARA Title III Notifications and Information: Isobutylene is Listed under the accident prevention provisions of section 112 ® of the Clean Air Act (CAA) with a threshold quantity (TQ) of 10,000 pounds.

This product does not contain toxic chemicals subject to reporting requirements of section 313 of the Emergency planning and Community Right-To-Know Act (EPCRA) of 1986 and of 40 CFR 372.
SARA Title III – Hazard classes:
Sudden Release of Pressure Hazard

California Proposition 65:
This product does not contain ingredients (s) Known to the State of California to cause cancer or reproductive toxicity.

15a. AGENCIES AND TERMS WHICH MAY BE PERTINENT TO THIS PRODUCT

SARA	Superfund Amendments and Reauthorization Act
OSHA	Occupational Safety and Health Administration
DOT	Department of Transportation
TSCA	Toxic Substance Control Act
NTP	National Toxicology Program
ACGIH	American Conference of Governmental Industrial Hygienists
PEL	Permissible Exposure Limit
STEL	Short Term Exposure Limit
TLV	Threshold Limit Value
TDG	Transportation of Dangerous Goods

16. OTHER INFORMATION

Other Precautions: Protect containers from physical damage. Do not deface cylinders or labels.
Abbreviations:
N/Ap – Not Applicable
N/Av – Not Available
SA – Simple Asphyxiant

DISCLAIMER OF EXPRESSED AND IMPLIED WARRANTIES:
Although reasonable care has been taken in the preparation of this document, we extend no warranties and make no representations as to the accuracy or completeness of the information contained herein, and assume no responsibility regarding the suitability of this information for the user's intended purposes or for the consequences of its use. Each individual should make a determination as to the suitability of the information for their particular purpose (s).

MATERIAL SAFETY DATA SHEET - CALIBRATION CHECK GAS

PRODUCT NAME: HYDROGEN SULFIDE (10 PPM – 1000 PPM) IN AIR

MSDS NO: 105 **Version:3** **Date: March, 2012**

1. Chemical Product and Company Identification

Gasco Affiliates, LLC
320 Scarlett Blvd.
Oldsmar, FL 34677

TELEPHONE NUMBER: (800) 910-0051 **24-HOUR EMERGENCY NUMBER: 1-800-424-9300**
FAX NUMBER: (866) 755-8920
E-MAIL: info@gascogas.com

PRODUCT NAME: HYDROGEN SULFIDE (10 PPM – 1000 PPM) IN AIR
CHEMICAL NAME: Hydrogen Sulfide in air
COMMON NAMES/ SYNONYMS: None
TDG (Canada) CLASSIFICATION: 2.2
WHIMIS CLASSIFICATION: A

2. COMPOSITION/ INFORMATION ON INGREDIENTS

INGREDIENT	%VOLUME	PEL-OSHA	TLV-ACGIH	LD_{50} or LC_{50} Route/Species
Hydrogen Sulfide FORMULA: H_2S	0.001-0.025	10 ppm TWA	10 ppm TLV 15 ppm STEL	LC_{50} 444 ppm/1H (Rat)
Air FORMULA: Mixture	99.0 to 99.9999	N/A	N/A	N/A

CAS # 7783-06-4

3. HAZARDS IDENTIFICATION

EMERGENCY OVERVIEW

This product is a colorless gas, which has a rotten-egg odor. The odor cannot be relied on as an adequate warning to the presence of this product, because olfactory fatigue occurs after over-exposure to Hydrogen Sulfide. Over-exposure to this gas can cause skin or eye irritation, nausea, dizziness, headaches, collapse, unconsciousness, coma, and death. Additionally, releases of this product may produce oxygen-deficient atmospheres and may cause asphyxiation.

ROUTE OF ENTRY:

Skin Contact	Skin Absorption	Eye Contact	Inhalation	Ingestion
Yes	No	Yes	Yes	No

HEALTH EFFECTS:

Exposure Limits	Irritant	Sensitization	Reproductive Hazard	Mutagen
Yes	Yes	No	Yes	Yes

Carcinogenicity: --NTP: No IARC: No OSHA: No

EYE EFFECTS:
Contact may cause eye irritation with associated redness, swelling, and tears.

SKIN EFFECTS:
Contact may cause skin irritation.

INGESTION EFFECTS:
Ingestion unlikely. Gas at room temperature.

INHALATION EFFECTS:
Over-exposure to Hydrogen Sulfide can cause dizziness, headache, and nausea. Over-exposure to this gas could result in respiratory arrest, coma, or unconsciousness. Continuous inhalation of low concentrations of Hydrogen Sulfide may cause olfactory fatigue, so that the odor is no longer an effective warning to the presence of this gas.

At 0.3 ppm to 30 ppm the odor is unpleasant. At 50 ppm eye irritation occurs and dryness of the nose and throat. At 100- 150 ppm a temporary loss of smell occurs. Exposures of 200- 250 ppm for more than 4 hours can cause death.

MEDICAL CONDITIONS AGGRAVATED BY EXPOSURE:
Individuals with impaired pulmonary function may be at increased risk form exposure.

NFPA HAZARD CODES		HMIS HAZARD CODES		RATING SYSTEM
Health:	3	Health:	3	0= No Hazard
Flammability:	0	Flammability:	0	1= Slight Hazard
Reactivity:	0	Reactivity:	0	2= Moderate Hazard
				3= Serious Hazard
				4= Severe Hazard

4. FIRST AID MEASURES

EYES:
PERSONS WITH POTENTIAL EXPOSURE SHOULD NOT WEAR CONTACT LENSES. Flush contaminated eyes with copious quantities of water. Part eyelids to assure complete flushing. Continue for a minimum of 15 minutes. Seek immediate medical attention.

SKIN:
Remove contaminated clothing as rapidly as possible. Flush affected area with copious quantities of water. Seek immediate medical attention.

INGESTION:
Not required

INHALATION:
PROMPT MEDICAL ATTENTION IS MANDATORY IN ALL CASED OF OVEREXPOSURE. RESCUE PERSONNEL SHOULD BE EQUIPPED THE SELF-CONTAINED BREATHING APPARATUS. Victims should be assisted to an uncontaminated area and inhale fresh air. Quick removal from the contaminated area is most important. If breathing has stopped administer artificial resuscitation and supplemental oxygen. Further treatment should be symptomatic and supportive.

5. FIRE-FIGHTING MEASURES

These containers hold gas under pressure, with no liquid phase. If involved in a major fire, they should be sprayed with water to avoid pressure increases, otherwise pressures will rise and ultimately they may distort or burst to release the contents. The gases will not add significantly to the fire, but containers or fragments may be projected considerable distances - thereby hampering fire fighting efforts.

6. ACCIDENTAL RELEASE MEASURES

In terms of weight, these containers hold very little contents, such that any accidental release by puncturing etc. will be of no practical concern.

7. HANDLING AND STORAGE

Suck back of water into the container must be prevented. Do not allow backfeed into the container. Use only properly specified equipment which is suitable for this product, its supply pressure and temperature. Use only in well-ventilated areas. Do not heat cylinder by any means to increase rate of product from the cylinder. Do not allow the temperature where cylinders are stored to exceed 130°F (54°C).

8. EXPOSURE CONTROLS/PERSONAL PROTECTION

Use adequate ventilation for extended use of gas.

9. PHYSICAL AND CHEMICAL PROPERTIES

PARAMETER:	VALUE:
Physical state	: Gas
Evaporation point	: N/A
pH	: N/A
Odor and appearance	: Colorless gas with a rotten egg odor

10. STABILITY AND REACTIVITY

Stable under normal conditions. Expected shelf life 15 months.

11. TOXICOLOGICAL INFORMATION

This gas mixture contains components that may cause embryotoxic effects in humans; however due to the small amount of gas in this cylinder, embryotoxic effects are not expected to occur.

12. ECOLOGICAL INFORMATION

No ecological damage caused by this product.

13. DISPOSAL INFORMATION

Do not discharge into any place where its accumulation could be dangerous. Used containers are acceptable for disposal in the normal waste stream as long as the cylinder is empty and valve removed or cylinder wall is punctured; but GASCO encourages the consumer to return cylinders.

14. TRANSPORT INFORMATION

	United States DOT	Canada TDG
PROPER SHIPPING NAME:	Compressed Gas N.O.S. (Hydrogen Sulfide in Air)	Compressed Gas N.O.S. (Hydrogen Sulfide in Air)
HAZARD CLASS:	2.2	2.2
IDENTIFICATION NUMBER:	UN1956	UN1956
SHIPPING LABEL:	NONFLAMMABLE GAS	NONFLAMMABLE GAS

15. REGULATORY INFORMATION

Toxic Substances Control Act (TSCA)/ Designated Substances List (DSL):
All Ingredients are listed on the TSCA Inventory, as well as the Canadian Designated Substances List.

Hydrogen Sulfide is listed under the accident prevention provisions of section 112(r) of the Clean Air Act (CAA) with a threshold quantity (TQ) of 10,000 pounds.

16. OTHER INFORMATION

This MSDS has been prepared in accordance with the Chemicals (Hazard Information and Packaging for Supply (Amendment) Regulation 1996. The information is based on the best knowledge of GASCO, and its advisors and is given in good faith, but we cannot guarantee its accuracy, reliability or completeness and therefore disclaim any liability for loss or damage arising out of use of this data. Since conditions of use are outside the control of the Company and its advisors we disclaim any liability for loss or damage when the product is used for other purposes than it is intended.

MATERIAL SAFETY DATA SHEET - CALIBRATION CHECK GAS

PRODUCT NAME: METHANE (0.0001% TO 3.5%) IN AIR

MSDS NO: 135 **Version:3** **Date: August, 2010**

1. Chemical Product and Company Identification

Gasco Affiliates, LLC
320 Scarlett Blvd.
Oldsmar, FL 34677

TELEPHONE NUMBER: (800) 910-0051 **24-HOUR EMERGENCY NUMBER: 1-800-424-9300**
FAX NUMBER: (866) 755-8920
E-MAIL: info@gascogas.com

PRODUCT NAME: METHANE (0.0001% TO 3.5%) IN AIR
CHEMICAL NAME: Methane in Air
COMMON NAMES/ SYNONYMS: None
TDG (Canada) CLASSIFICATION: 2.2
WHIMIS CLASSIFICATION: A

2. COMPOSITION/ INFORMATION ON INGREDIENTS

INGREDIENT	%VOLUME	PEL-OSHA	TLV-ACGIH	LD_{50} or LC_{50} Route/Species
Methane FORMULA: CH_4	0.0001 to 3.5	Simple Asphyxiate	Simple Asphyxiate	N/A
Air FORMULA: Mixture	Mixture	N/A	N/A	N/A

3. HAZARDS IDENTIFICATION

EMERGENCY OVERVIEW

Compressed gas-Nonflammable. Product contains sufficient oxygen to support combustion.

ROUTE OF ENTRY:

Skin Contact	Skin Absorption	Eye Contact	Inhalation	Ingestion
Yes	No	Yes	Yes	No

HEALTH EFFECTS:

Exposure Limits	Irritant	Sensitization	Reproductive Hazard	Mutagen
No	No	No	No	No

Carcinogenicity: --NTP: No IARC: No OSHA: No

EYE EFFECTS:
None known.

SKIN EFFECTS:
None known.

PRODUCT NAME: METHANE (0.0001% TO 3.5%) IN AIR

INGESTION EFFECTS:
Ingestion unlikely. Gas at room temperature.

INHALATION EFFECTS:
None expected. This product does not contain sufficient methane to displace atmospheric oxygen.

NFPA HAZARD CODES		HMIS HAZARD CODES		RATING SYSTEM
Health:	0	Health:	0	0= No Hazard
Flammability:	0 (4, as methane)	Flammability:	0 (4, as methane)	1= Slight Hazard
Reactivity:	0	Reactivity:	0	2= Moderate Hazard
				3= Serious Hazard
				4= Severe Hazard

4. FIRST AID MEASURES

EYES:
None required.

SKIN:
None required.

INGESTION:
Product is a gas.

INHALATION:
None required for use at normal atmospheric pressures.

5. FIRE-FIGHTING MEASURES

These containers hold gas under pressure, with no liquid phase. If involved in a major fire, they should be sprayed with water to avoid pressure increases, otherwise pressures will rise and ultimately they may distort or burst to release the contents. The gases will not add significantly to the fire, but containers or fragments may be projected considerable distances - thereby hampering fire fighting efforts.

6. ACCIDENTAL RELEASE MEASURES

In terms of weight, these containers hold very little contents, such that any accidental release by puncturing etc. will be of no practical concern.

7. HANDLING AND STORAGE

Suck back of water into the container must be prevented. Do not allow backfeed into the container. Use only properly specified equipment which is suitable for this product, its supply pressure and temperature. Use only in well-ventilated areas. Do not heat cylinder by any means to increase rate of product from the cylinder. Do not allow the temperature where cylinders are stored to exceed 130°F (54°C).

8. EXPOSURE CONTROLS/PERSONAL PROTECTION

Use adequate ventilation for extended use of gas.

PRODUCT NAME: METHANE (0.0001% TO 3.5%) IN AIR

9. PHYSICAL AND CHEMICAL PROPERTIES

PARAMETER:	VALUE:
Physical state	: Gas
Evaporation point	: N/A
pH	: N/A
Odor and appearance	: Colorless, odorless gas

10. STABILITY AND REACTIVITY

Stable under normal conditions. Expected shelf life 48 months.

11. TOXICOLOGICAL INFORMATION

No known toxicological effects form this product.

12. ECOLOGICAL INFORMATION

No ecological damage caused by this product.

13. DISPOSAL INFORMATION

Do not discharge into any place where its accumulation could be dangerous. Used containers are acceptable for disposal in the normal waste stream as long as the cylinder is empty and valve removed or cylinder wall is punctured; but GASCO encourages the consumer to return cylinders.

14. TRANSPORT INFORMATION

	United States DOT	Canada TDG
PROPER SHIPPING NAME:	Compressed Gas N.O.S. (Methane in Air)	Compressed Gas N.O.S. (Methane in Air)
HAZARD CLASS:	2.2	2.2
IDENTIFICATION NUMBER:	UN1956	UN1956
SHIPPING LABEL:	NONFLAMMABLE GAS	NONFLAMMABLE GAS

15. REGULATORY INFORMATION

Methane is listed under the accident prevention provisions of section 112(r) of the Clean Air Act (CAA) with a threshold quantity (TQ) of 10,000 pounds.

16. OTHER INFORMATION

This MSDS has been prepared in accordance with the Chemicals (Hazard Information and Packaging for Supply (Amendment) Regulation 1996. The information is based on the best knowledge of GASCO, and its advisors and is given in good faith, but we cannot guarantee its accuracy, reliability or completeness and therefore disclaim any liability for loss or damage arising out of use of this data. Since conditions of use are outside the control of the Company and its advisors we disclaim any liability for loss or damage when the product is used for other purposes than it is intended.

MSDS/S010/135/ August, 2010

Appendix G

Management of Change Form Template

Management of Change

OE Required Process

Chevron Environmental Management Company

Revised 3 October 2012
Version 6.0

© 2012 by Chevron U.S.A. Inc.

This document contains Chevron's confidential and proprietary information. Use of this document is prohibited, except as authorized by Chevron U.S.A. Inc. and/or its affiliated Chevron companies.

Management of Change Process

Contents

Management of Change Process **1**
Contents **1**
1.0 Process Overview **1**
1.1 Purpose 1
1.2 Scope 1
1.3 Objectives 2
1.4 OE Expectations Met 2
1.5 Linkages to Other OE Processes 3
The Managing Safe Work Process is linked to the following processes: **3**
2.0 Procedures **3**
3.0 Resources, Roles and Responsibilities **10**
4.0 Measurement and Verification **12**
4.1 Measurement 12
4.1.1 Leading Measures 12
4.1.2 Lagging Measures 12
5.0 Continual Improvement **13**
5.1 Continual Improvement Plan 13
6.0 Document Control Information **13**
7.0 Document List **14**

1.0 Process Overview

1.1 Purpose

The purpose of managing change is to reduce the potential for safety, environmental, health, reliability, or efficiency incidents associated with the ongoing changes inherent in the management of EMC business. This process is designed to ensure that all change events are systematically reviewed, communicated, approved and documented.

1.2 Scope

A change event is defined as any variation from previously planned and approved utilization of work practices, equipment, facilities or products (Operational Changes); or business processes, services or personnel (Organizational Changes). A change event may be a permanent or temporary change to either an organization or operation.

The requirement to manage change applies to all personnel, company or contractor, responsible for developing and implementing both permanent and temporary changes to EMC operations, organizations, or business processes; or changes that could affect other Chevron entities or their respective business partners including changes that are identified as temporary.

The tools used to manage changes should match the location, the risk and the potential impacts associated with the change. Changes in daily work tasks may be managed by using the Job Safety Analysis / Job Safety Plan tool as discussed in the EMC's Contractor HES Management Process (CHESM).

Changes in job scope or job hazards may be managed by revising the contractor's Health and Safety Plan as discussed in EMC's HASP Generation and Implementation Process.

- Changes associated with a contractor's personnel equipment or facility shall be managed by the contractor's MOC process.
- Changes that occur within the jurisdiction of a host OpCo must be managed according to the provisions and requirements of that OpCo's MOC process.
- Operational or organizational changes not managed by the tools discussed above shall be managed using the EMC MOC Process Form or other EMC change tools.

1.3 Objectives

The objective of this process is to ensure that all operational and organizational changes, both permanent and temporary are managed at the appropriate level of rigor to meet the purpose.

This objective is accomplished by:

- Training all personnel, both employee and contractor, in the appropriate MOC tool usage,
- Documenting the management of changes, and
- Reviewing the usage of the various tools.

We will know that the objective is attained when:

- All changes are planned, communicated and approved using the appropriate level of rigor as evidenced by zero incidents identifying a "failure to manage change" as a root cause;
- All potential change owners have been trained and a process is in place for training new personnel; and
- Change events using the EMC MOC form are tracked and regularly reviewed by the Process Sponsor and the Process Advisor to verify competency of the organization.

1.4 OE Expectations Met

This process meets the operational and organizational change requirements of OE Element 4: Management of Change which states:

Manage both permanent and temporary changes to prevent incidents.

4.1 - A process is in place to manage changes to facilities, operations, products or the organization. The management of change process shall address:

- Both permanent and temporary changes
- Authority for approving changes
- Evaluation of health and safety hazards, environmental impacts and mitigation
- Communication of the change
- Training of all personnel impacted by the changes to facilities, operations, products or the organization.
- Updates to and maintenance of critical OE documentation.

1.5 Linkages to Other OE Processes

The Managing Safe Work Process is linked to the following processes:

- EMC Contractor Health, Environment, Safety Management (CHESM) Process
- EMC Health and Safety Plan (HASP) Standard
- EMC Incident Investigation and Reporting (II&R) Process
- EMC Compliance Assurance Process
- EMC Managing Safe Work Process
- EMC Facility Design and Construction (FD&C) Process
- Process Safety Management Process

2.0 Procedures

Criteria for Managing Change

A checklist of criteria for changes requiring a formal change management process is contained in Section 7.0. This checklist is a general guideline and should not be considered to be all-inclusive of every possible change. Each Project Manager shall develop a more specific list of criteria addressing their work activities, on a project basis, as part of the project planning. Examples of when to use a change management process include, but are not limited to:

1. Operational Changes:
   - Permanent or temporary changes to process chemicals, equipment, procedures, or mechanical systems which are not in-kind
   - Changes to safety equipment or process safety information
   - Changes to process conditions or operating parameters, i.e., fluids, levels, pressures or temperatures outside pre-established limits in existing systems
   - Operating outside of established safe upper and lower limits
   - Installation or removal of facilities (also see FD&C)
   - Installation or construction of field fabricated equipment or devices
   - Changes affecting emergency response procedures
   - Electrical upgrades, removal or reclassification

2. Organizational Changes:
   - Changes to job duties of line, staff/support, emergency response and management personnel
   - Increases or decreases in staffing levels, company organization or other significant organizational modifications
   - Changes in key personnel
   - Changes to business and OE related processes (for example, incident investigation, selection of third party services, etc.)

   Facility startup and shutdown must be performed using the MOC process. The MOC will include an approval chain, a checklist of key activities, and documentation requirements.

3. Temporary Change:

   This section defines the expectations for temporary change. Temporary changes are those changes that incorporate within themselves a built-in termination date or time. Changes of this type are often implemented to keep the operation running while a piece of equipment is repaired or replaced or in anticipation of a major maintenance campaign or shut down. The same process and procedures that apply to permanent changes shall be used for temporary changes.

   The Change Request for the temporary change shall clearly define the reason that the temporary change is needed. The change description shall also indicate the proposed duration of the temporary change.

   The duration of temporary changes is left to the discretion of the Approver. The functional review and risk assessment for a temporary change must specifically address any changes to the risk that could occur over time as a result of the temporary change. The functional review and risk assessment must also confirm that the temporary change can be operated safely for the proposed duration of the change. If the duration is modified as a result of these assessments, the MOC should be recycled to the Approver.

   At the end of the approved duration, a temporary change must be returned to original service, replaced by a permanent change, converted to a permanent change, or extended.

   - Returned to Original Service: A Pre Start-up Safety Review (PSSR) is required when a temporary change is removed and equipment returned to original service this information is captured in the PSSR Checklist. Temporary Changes that are highly complex and/or in service for an extended duration may require a risk assessment prior to reverting to the original equipment condition. The Approver must approve start up of the equipment following return to original service and should verify that appropriate PSSR and as needed, risk assessment were performed. Once the facility is returned to original service and facility information updated to reflect removal of the temporary change, the Temporary MOC should be closed.
   - Replaced by a Permanent Change: A new MOC is required when replacing a temporary change with a permanent change other than the original service. The risk assessment and PSSR steps of the MOC for the permanent change must address removal of the temporary change. Once the permanent change has been closed,

the temporary change should also be closed. The permanent and temporary change records should be linked in such a way that the full history of the change is clearly evident.

- Extended: A new temporary MOC is required to extend the duration of a previously approved temporary MOC. The new temporary MOC for the extension must reflect the full duration of the temporary change from the time of the original start-up. It must also explicitly indicate the originally approved duration of the change as well as the proposed duration of the extension. The risk assessment review for the extension must confirm that the temporary change will continue to be safe to operate for the full duration of operation, including the proposed extension. Once the new MOC for the extension is approved for start-up, the original temporary MOC should be closed. The original temporary change and the extension records must be linked in such a way that the full history of the change is clearly evident.

Certain changes and modifications do not require specific management activity, utilize the MOC screening checklist to assist in decision. Examples include, but are not limited to:

- Changes in-kind
- Changes within established operating ranges
- Minor facility modifications or maintenance activities that do not affect process safety information, facility operation or safety/environmental risk

Regardless of whether a formal, documented MOC process is to be used, all changes must be managed to prevent incidents. For example, a like kind change in equipment would still require a thorough inspection of the new equipment for potential defects.

Available Management Tools

Several change management tools are available for use, depending on the conditions and risks associated with the change. The EMC MOC form is one available tool, but is not appropriate in every circumstance. Examples of when to use other change management tools include, but are not limited to:

Type of Change	Management Tool	Reference
Changes within an OPCO	The OPCO specific MOC process	Specific Opco Web Site
Changes in project scope	CPDEP, HASP	EMC OE Library
Changes in daily work tasks	JSA/JSP; Safe Work Permits	EMC OE Library
Changes in personnel	Handover and knowledge transfer checklists	Section 7.0
Organizational changes that affect more than one BU or area within a BU.	Adapted ETC Management of Organizational Change process	ETC Web Site
New employees	On-boarding process	Section 7.0
Changes to facilities or equipment	Checklists	Section 7.0
All changes	MOC Form and instructions	Section 7.0

Overview of the Basic Steps

If the criteria to manage an operational or organizational change using the EMC MOC form are met, the basic steps are as follows:

- Initiate the process
- Complete the MOC form by describing the change identify tasks and potential HES risks and mitigations
- Forward the change information to the approver and the reviewers for initial approval of the change
- Communicate the change in addition to Identify and conduct any necessary training
- Pre Start-up Safety Review (PSSR)
- Verification and final approval
- Close out the MOC documenting the change

Step One: Initiating the Process

The person responsible for making the change occur is the "MOC Change Owner". The MOC Change Owner initiates the EMC MOC process by accessing the MOC Library, using the EMC Process Page. If the Change Owner does not have access to the EMC internal website, the Change Owner must request the Change Approver to initiate the change process. Refer to the MOC Library Quick Reference Guide for assistance in using the EMC MOC SharePoint Library.

Step Two: Change Owner completes the MOC Report Form

Policy, Government and Public Affairs (PGPA) Flag Review - Review the Public Affairs Identification Process to determine if updated screening questionnaire is required. Questionnaire data should be reviewed and updated when the following occurs (not necessarily a complete list):

- Change in surrounding land use(s)
- Change in use of the property
- Sale of the property
- Plume/contamination migrates off-site
- A large excavation for the project is planned (when was not planned or expected previously)
- Project/site receives media attention (when had none previously)
- Public complaints made about the project/site (when were none previously)
- Litigation/claims filed or threatened against the company regarding the project/site (when were none previously)
- New development or buildings being built, or have been built, over the plume/contamination
- Announcement of new plans for development or redevelopment of the property
- Discovery that a nearby municipal or private water supply, or surface water body has been contaminated or possibly contaminated
- New information suggests that there is potential for vapor intrusion into a non-service station structure

- New information indicates the nearby presence of community or environmental receptors or special/valued sites.

MOC Tasks - List the work tasks required to complete the change. This section is used to list the specific actions required to implement the change. These are the key activities that need to occur during the change. Keep the tasks parallel in scope. Don't micro plan one part and gloss over the tasks in another part of the change. Each task should be discrete and assignable to someone. Review the task list to ensure that all the major steps of your change are included. This section could be quite lengthy, depending upon the type of change and its scope.

Subject Matter Experts - Each task needs to be assigned to someone. The Change Owner defines the needed subject matter experts. Depending on the complexity and type of change, the Change Approver may add Subject Matter Experts. This section contains the names of the personnel or departments that have been assigned to each task. The Subject Matter Experts named for each task should be the person responsible for completing the task or review. Establish a date for the completion of the task. Record the actual completion date when it occurs.

Common aspects of their review include:

- Understanding the justification for the change;
- Understanding the scope of the change;
- Understanding the hazards of the change by conducting a hazards review with appropriate stakeholders;
- Identifying any regulations or standards that apply;
- Reviewing prior lessons learned;
- Identifying any needed training;
- Identifying any other resources that should be employed; and
- Developing action items and ensuring action items are addressed prior to implementation (or forwarding to the Change Approver).

Risks - List the risks associated with the change. These are the risks to people, equipment, products, the business, or the environment during and after the change. It is not intended to take the place of a JSA or a PHA. List the responsible party, the due date and eventually, record the date completed. Each risk needs to be assigned to someone who will be responsible for mitigating the risk.

Step Three: Change Approver Review

The MOC Change Owner identifies the individual having the authority to approve the change (Change Approver). In many cases, the Change Approver will be the Project Manager or designate. The Change Approver must be a Chevron employee.

The Change Approver Shall:

- Approve the initial MOC document and forward to the subject matter experts;
    - Clear scope and proper assignment of change type i.e. normal (temporary / permanent)
- Add or delete subject matter experts;
- Cancel the proposed change and return the document to the Change Owner; or
- Approve the change if no subject matter expert input is needed.
- Review the Communication Plan to ensure the plan reaches all parties that are affected by the change.

Subject Matter Experts report their findings and the status of their action items to the Change Approver.

Step Four: Communication Plan

Other organizations can be affected by a change; therefore, good communication is essential to reduce losses due to fines or other incidents associated with change. Other Chevron entities, contractors, and government agencies are just a few of the organizations to consider contacting and communicating with when implementing a change. In this section of the MOC Form, identify the groups impacted by this change and plan how the Change Owner or designate will communicate the change to those groups. Attach existing communication plans, define necessary communication tasks, assign individuals to those tasks, and determine target and actual completion dates.

Implementing the change involves assuring that everyone who needs to know about the change is informed. This might be as simple as distributing an e-mail or it could be formal training or issuing revised procedures. Identify who needs to know about the change and list how the Change Owner or designate will communicate the change. If in doubt, err on the side of telling too many people instead of assuming that an individual or group does not need to know about the change.

It is the responsibility of the Change Owner to identify the information, audience and implementation of the communications plan.

Step Five: Pre-Start Up Safety Review (PSSR)

Pre Start-up Safety Review is a final check prior to initiating the use of equipment. The PSSR verifies that all related process safety requirements have been met and that the condition and readiness of the physical equipment and facilities is safe to start-up.

A fit for purpose PSSR, including appropriate process safety system verification and equipment / operational readiness checks is required. The record of the PSSR must be available as part of the MOC documentation of the change.

The Pre-Startup Safety Review ensures:

- The change is constructed in accordance with the approved design
- The change has been adequately communicated

- Procedures are updated and personnel are trained
- Safeguards are in place to minimize risk
- The workforce is aware of potential hazards introduced with the change.
- Facility information is complete. For example, final as-built or red-lined drawings such as P&IDs, instrumentation loop diagrams and control room panel wiring diagrams are in place during start-up
- Action items from Functional Review and Risk Assessment are appropriately closed
- Maintenance and equipment management systems have been updated
- Process units, storage facilities, process equipment, marine & structural systems that have been shut down, altered or otherwise taken out-of-service are in the appropriate condition for safe startup
- The physical condition of the equipment such as equipment lineup, leak tightness, proper isolation from other systems not yet ready for startup, and cleanliness supports a safe start-up

The objectives of the PSSR step are to confirm that the change was constructed consistent with the approved design and intent of the MOC, to confirm that process safety systems appropriately reflect the change, to verify the closure status of action items, to confirm that the equipment is in an appropriate condition for start-up and to validate whether it is safe to start-up.

Step Six: Change Approver Verification and Approval

Before authorizing the change, the Change Approver shall:

- Confirm reviews and action items are complete;
- Confirm all documentation is complete;
- Verify that manuals and procedures are updated; and
- Verify that appropriate communications have been made, and affected work groups have been trained or a training plan is in place.

Upon verification, the Change Approver approves the change for implementation.

Step Seven: MOC Close Out

The Change Approver ensures that all final change documents are complete and entered in the MOC SharePoint Library.

MOC document shall address Process Safety Information updates as well as other information that is associated with the change and communications plan. Below is a list of documents that shall be included but not limited to:

- MOC Form
    - Complete all applicable tabs for the specific change (i.e., PSSR, Process Hazard Checklist, etc.)
- Operating Procedures
- Piping and Instrument Drawings

- Material Safety Data Sheets
- Chemical Inventory Registers
- Electrical Drawings
- Training Rosters
- Meeting Agendas
- Job Safety Analysis (JSA)

These documents shall be included in the MOC SharePoint Library as applicable to the change Linked processes may have documentation requirements when changes are complete. The documentation must be completed before the MOC can be closed

3.0 Resources, Roles and Responsibilities

Table 1: Key Process Roles

Role	Name	Title
Process Sponsor	Colin Beverley	OE General Manager
Process Advisor	Scott Wible	OE Coordinator
MOC Team	Scott Mansholt	Senior Project Manager - SFPM
MOC Team	Bob Blalock	Team Lead - UBU - USW
MOC Team	Gene Loftin	OE/HES Team Lead - RBU
MOC Team	Brett Hunter	Project Manager - MBU
MOC Team	Robert Speer	Project Manager - MBU

Table 2: Responsibilities and Competencies

Role	Responsibilites	Competencies
Management of Change Process Sponsor	• Serve as the EMC-wide advocate of the process to ensure that it is understood and used as designed within each Business Unit. • *Conduct a quarterly review of process effectiveness and efficiency.*	• Fluency in the Operational Excellence Management System. • Ability to provide vision and strategic direction. • Understanding of the Management of Change Process. • Understanding of the components of the OE Process Model.
Management of Change Process Advisor	• Be fluent in the Management of Change Process. • Review process effectiveness. • Facilitate continual improvement.	• Fluency in the Management of Change Process. • Facilitative leadership skills. • Analytical and planning ability. • Understanding of continual improvement.

Role	Responsibilites	Competencies
	• Evaluate the design of the process at least every year and update if necessary. • Identify emerging issues related to the process. • Track and monitor MOC use.	• Understanding of the OE Process Model components.
MOC Working Team Representatives	• Responsible for identifying Process Improvement opportunities. • Serves as a resource to answer MOC question originating within each BU. • Assists with periodic process reviews. • *Ensures that BU personnel correctly document MOC 's.*	• Knowledge of the MOC process.
Change Owner (May be a Chevron employee or a contractor representative)	• Responsible for identifying change opportunities. • Provides initial assessment of the change opportunity. • Develops the MOC Form and support documentation for submission to the Change Approver • Makes initial selection of Subject Matter Experts. • Ensures appropriate communication with the Change Approver, Subject Matter Experts and other stakeholders. • Responsible to determine if the change is safe and sustainable. • Responsible to determine that the risks associated with the change have been identified, and appropriate mitigation measures have been identified. • Develops, coordinates, and ensures all affected parties are address in the MOC communication plan. • Ensures that pre-change and post-change actions are completed.	• Functional or technical knowledge relevant to the change. • Knowledge of the MOC process. • Knowledge of HES related assessments (JHA, Risk Assessments, HazOp, etc.). • Knowledge of the OE Tenets.
Change Approver (e.g. Typically the Project Manager or the next line of supervision, must be a Chevron employee)	• Reviews, modifies, and approves (or recycles) the list of subject matter experts, and the required action items. • Evaluates the change request and the preliminary identification of risks. • Determines if the change follows the MOC process.	• Clearly understands the scope of the MOC Project. • Understanding of the change opportunity. • Understanding of OE Tenets and HES activities. • Understanding of business priorities and business value. • OE fluency. • CPDEP fluency.

Role	Responsibilites	Competencies
	• Applies lessons learned from previous experience. • Authorizes the start of work (allows the change to happen). • Ensures that the MOC is properly closed out and documented. • Verifies effectiveness of MOC communication plan.	
Subject Matter Experts (e.g., Technically competent individual(s) who are recognized by job description and reporting function to provide expert counsel on a specific issue(s))	• Maintain SME competency in functional area. • Address procedural requirements as assigned in a timely manner. • Identify risks and impacts presented by a specific MOC. • Specify controls or mitigations. • Apply lessons learned from previous experience; • Understand the impacts of the change on existing processes with respect to their area(s) of expertise. • Identify other resources that should be involved in the review.	• Functional knowledge or expertise. • Understanding of the MOC process. • Ability to identify the OE impacts of a proposed change. Ability to identify hazards involved and to specify and apply controls and/or other protective measures.

4.0 Measurement and Verification

4.1 Measurement

4.1.1 Leading Measures

- **Leading Indicators**:
    - All change owners and approvers have been trained in the process

4.1.2 Lagging Measures

- **Lagging Indicators**:
    - Incidents and near misses with a root-cause analysis listing the MOC Process as a causal factor and less the 20% of current.

5.0 Continual Improvement

5.1 Continual Improvement Plan

Evaluation – The MOC Process Sponsor and Advisor are responsible for evaluating the effectiveness of the process. The Process Advisor will review, on a quarterly basis, the consolidated tracking data from each EMC Business Unit. This review will address EMC's progress toward the stated objectives, as defined by the lagging indicators. Annually, the Process Advisor will review the tracking data with the Process Sponsor. The Business Unit General Managers will identify issues and communicate those issues to the Process Sponsor.

Improvement – The Process Advisor will identify process improvements based on MOC data tracking review, Process Sponsor discussions, OE Champion discussions, the annual process review, and discussions with MOC users. Substantive changes to the MOC Process must be authorized by the OE Steering Team. Approved changes will communicated to the workforce with the release of revised process documentation and updated training materials. Individual Business Unit deficiencies in process utilization will be addressed by the respective Business Unit General Manager.

6.0 Document Control Information

Table 3: Document Control Information

Current Version Issue Date:	October, 2012
Document Location:	EMC OE Process Library

Table 4: Document History

Version Number	Date	Notes
1.1	Sept. 2005	New Procedure
2.1	May 2006	Entire document revision pursuant to the finding of the OE Review Team findings.
3.1	June 2007	Process Optimization developed from EMC self assessment findings, addition of support documentatijon.
4.1	May 2009	Inclusion of a knowledge transfer process and clarification of roles and responsibilities related to tracking.
5.1	July 2011	Revised procedures to retain records in Sharepoint platform
6.0	October 2012	Update process to address 2012 OE Audit findings

7.0 Document List

Attachment Title	Document
MOC Form and Instructions	MOC Form
MOC Screening Checklist	MOC Screening Checklist
Checklist for Supplier Change	MOC Supplier Change
Transfer of PM	MOC Project Manager Transfer
New Employee Onboading checklist	MOC New Employee Checklist

Management of Change (MOC) Report Form Chevron Environmental Management Company (CEMC)	
Complete all tabs and fields for each MOC including the Process Hazard Checklist and PSSR Checklist when applicable to the change.	
MOC Details	
Date Issued:	Enter the date of the MOC (DDMMMYYYY)
Change Owner	List who is preparing the MOC Form. This is the person who has identified the need for the change. May be an EMC Project Manger or Contractor.
Affected	List which locations or operations are impacted by the change.
MOC ID #	Identification number format: CAI_DDMMMYYYY_BU_MOC Type_Project Site *(e.g., PBWI_02Jan2012_RBU_Operational_Fillmore)* . This is specific identifier to enable categorization and location.
Type of Change	Select the type of change from the options (Operational or Organizational)
Temporary Change	Select Yes or No
Temporary Change Expiration Date	Enter the date the temporary change should return to normal operations (DDMMMYYYY)
Detailed Description	Enter the details for the change (What, where, when, and how)
Approvals	
Initial MOC Plan	Enter the approvers name, target date for approval and date approval is completed
Communication Plan Review	Enter the approvers name, target date for approval and date approval is completed
Final Approval	Enter the approvers name, target date for approval and date approval is completed
Closing out the MOC	
Temporary Change	Enter the approvers name, target date for approval and date completed
Records Updated	Enter the approvers name, target date for approval and date completed
MOC Development Team	Enter in the name, company name, and title of the SME for the MOC
Documentation	Include all work document for the MOC. Many changes will include other work documents in addition to the MOC Form. For example; permits, drawings, project schedules, and letters might be produced for a change. These shall be included in the MOC SharePoint Library.
Document Storage	The MOC Form and any additional documents are stored in the MOC SharePoint Library. Copies may be stored locally.
Document Retention	The MOC documents shall be maintained for three years, or for the life of the facility affected by the change, whichever is longer.
MOC Tasks	

Public Affairs	Questionnaire Data should be reviewed and updated when the following occurs (not necessarily a complete list): - Change in surrounding land use - Change in use of the property - Sale of the property - Plume/contamination migrates off-set - A large excavation for the project is planned (when was not planned or expected previously) - Project/site receives media attention (hen had none previously) - Public complaints made about the project/site (when were note previously) - Litigation/claims filed or threatened against the company regarding the project/site (hen were none previously) - New development or buildings being build, or have been built, over the plume/contamination - Announcement of new plans for development or redevelopment of the property - Discovery that a nearby municipal or private weather supply, or surface water body has been contaminated or possibly contaminated - New information suggests that there is potential for vapor intrusion into a non-service station structure - New information indicates that nearby presence of community or environmental receptors or special/valued sites
Tasks	The tasks selection is used to list the specific action required to implement the change. These are the key activities that need to occur during the change. Keep the tasks parallel in scope. Don't micro-plan on part and gloss over the tasks in another part of the change. Each task should be discrete and assignable to someone. Review the task list to ensure that all the major steps of the change are included. This section could be quite lengthy, depending upon the type of change and scope.
Person Responsible	Each task needs to b reassigned a person responsible. The Change Owner defines the needed SME. Depending on the complexity and type of change, the Approver may add additional SMEs. This column contains the names of the personnel or departments that have been assigned to each task.
Target and Completed Dates	Enter the target and completion dates as appropriate (DDMMMYYYY)
MOC Risk	
Risks	List the risks associated with the change. Consider all risk to people, equipment, products, the business or environment during and after the change. It is not intended to take the place of the JSA or a PHA
Person Responsible	Each risk needs to be assigned a person responsible for mitigating the risk.
Target and Competed dates	Enter the target and completion dates as appropriate (DDMMMYYYY)
Process Hazard Checklist	

Process Hazard Checklist	Qualitative Risk Assessments provide a consistent method to identify, evaluate and control process hazards in systems that use significant quantities of highly hazardous and/or reactive chemicals.
MOC Pre-Start Up Safety Review (PSSR)	
PSSR Checklist	The objectives of the PSSR step are to confirm that the change was constructed consistent with the approved design and intent of the MOC, to confirm that process safety systems appropriately reflect the change, to verify the closure status of action items, to confirm that the equipment is in an appropriate condition for start-up and to validate whether it is safe to start-up.
MOC Communication	
Communications	Other organizations can be affected by a change; therefore, good communication is essential to reduce losses due to fines or there incidents associated with the change. Other Chevron entities, Contractors, and Government agencies are just a few of the organizations to consider contacting and communicating with when implementing a change.
Communications Coordinator	
Person Responsible	Identify the person responsible for coordinating the communications plan for the change.
Target and Competed dates	Enter the target and completion dates as appropriate (DDMMMYYYY)
Method of Communication	
Type of Communication	Identify the type of communication utilized. There may be multiple selections. If the type is not listed use the "other" field to describe what was done.
Person Responsible	Each communication type needs to be assigned a person responsible for coordinating the communication.
Target and	Enter the target and completion dates as appropriate (DDMMMYYYY)
Other Organizations	
Organization Name	Enter the name of the other organizations that required communication of the change (e.g., Other CVX opco, EPA, contractor company).
Date	Enter the date the communication completed (DDMMMYYYY)
Contact Name	Enter the name of the individual or department communicated with.
Type of Communication	Enter the type of communication utilized
Verification of Communication	
Person Responsible	The MOC Approver is responsible for verifying that the communication plan has been effectively executed to the appropriate audience.
Target and Competed dates	Enter the target and completion dates as appropriate (DDMMMYYYY)
Notes	Enter any information describing how the communications plan was executed.

Management of Change (MOC) Report Form
Chevron Environmental Management Company (CEMC)

Change Information:

Date Issued:	

Change Owner:	**Affected Location(s) - Operation(s)**:

MOC ID: (*CAI_DDMMMYYYY_BU_MOC Type_Project Site*)			**Type of Change:**	
			Operational	☐
			Organizational	☐
Temporary Change?	☐ Yes	☐ No	**Temporary Change Expiration Date:**	

Detailed Description of Change:

Approvals:

Initial MOC Plan	**Approver Name:**	**Target Date:**	**Approval Date:**
Communication Plan Review	**Approver Name:**	**Target Date:**	**Approval Date:**
Final Approval	**Approver Name:**	**Target Date:**	**Approval Date:**

Closing Out the MOC

	Person Responsible	**Target Date**	**Date Completed**
Temporary Change			
Records Updated			

MOC Development Team (SME):

Name	**Company Name**	**Title**

Management of Change (MOC) Report Form Chevron Environmental Management Company (CEMC)				
Tasks	*List the work tasks required to complete the change. List the Responsible Subject Matter Experts and the target date.*			
Public Affairs	*Certain changes require and update of the PGPA screening questionnaire. If required, this task should be listed below.*			
MOC Tasks:	**Describe detail of task**	**Person Responsible**	**Target Date**	**Date Completed**
1				
2				
3				
4				
5				
6				
7				
8				
9				
10				
11				
12				
13				
14				
15				
16				
17				
18				
19				
20				
21				
22				
23				
24				
25				
26				

27				
28				

Management of Change (MOC) Report Form Chevron Environmental Management Company (CEMC)				
Risk	*Identify associated risks and how they are to be mitigated. List the responsible party, target date and completion date.*			
MOC Risks:	**Describe detail of risk**	**Person Responsible**	**Target Date**	**Date Completed**
1				
2				
3				
4				
5				
6				
7				
8				
9				
10				
11				
12				
13				
14				
15				
16				
17				
18				
19				
20				
21				
22				
23				
24				
25				
26				
27				
28				

Management of Change (MOC) Report Form Chevron Environmental Management Company (CEMC)				
Process Hazard Analysis Checklist				
NOTE: *If an affirmative answer is made to any of the following items, explicit recommendations may be evident from application of checklist or a further more detailed hazards analysis/evaluation may be indicated as necessary. Further evaluation may be accomplished through the use of detailed checklists appropriate to the equipment or change involved or by investigation of potential hazards through another appropriate means (what-if, HAZOP, etc.).*				
Checklist Questions:	**Yes**	**No**	**N/A**	**Comments**
Introduce new chemicals that are toxic, flammable, corrosive or otherwise hazardous?				
Introduce a new chemical reaction to the process?				
Increase/decrease operating pressures outside present min/max operating limits?				
Require an increase in relief valve sizing?				
Create the potential for vacuum?				
Increase operating temperatures above present operating limits?				
Decrease operating temperatures below present operating limits?				
Allow overfilling of a vessel?				
Cause levels to be lost from tanks?				
Increase/decrease flow rates significantly (20 %+)?				
Divert flows from or add flows to existing flow paths?				
Increase potential for erosive/corrosive conditions, including the potential creation of dead legs in piping circuits?				
unit/area				
Increase potential for a phase change?				
Increase the potential for deposits to occur or collect?				
system?				
Require an electrical area reclassification?				
foundations?				
Complicate or significantly alter a process control scheme?				
Increase/cause the potential for introduction of air into a closed or blanketed system?				
Tie sources into vent/drain systems which could plug?				

Tie sources into vent/drain systems that could change their temperatures beyond present design limits?				
Alter vents or drains such that hazardous chemicals can be transported to areas not designed for their presence?				
Introduce a potential ignition source into a process area?				
Introduce equipment with unusual operating or maintenance requirements or characteristics?				
Introduce containment around equipment containing hazardous (flammable/toxic) chemicals?				
Limit access to any process area or equipment, or in any way impede ingress or egress to/from the area?				
Has any similar change ever resulted in a safety related problem at this location?				
Alter materials of construction?				
Allow potential blocking, isolation or bypassing of a safety device (PSV, shutdown, etc.)?				
In any way affect existing safety equipment or require additional safety equipment, including fire protection equipment?				
In any way affect the ability to contain, isolate and vent hazardous material during release scenarios?				
In any way affect existing trip or alarm system, including testing programs, or add new devices to be tested?				
Affect existing operating or maintenance procedures, including preventive maintenance programs, or require new procedures?				
survey?				

Management of Change (MOC) Report Form Chevron Environmental Management Company (CEMC)				
MOC Pre-Start Up Safety Review (PSSR) Checklist				
Name of Person Completing the PSSR Checklist:	**Date PSSR Completed:**			
General Considerations	**YES**	**NO**	**N/A**	**INITALS**
Operators walk through and check complete?				
All Punch list items completed?				
Process Hazard analysis action items completed?				
P&ID walk downs complete?				
Commissioning & startup plan approved?				
Operation & safety signage in place?				
Are compressed gas cylinders segregated and secured?				
Utility systems commissioned and ready?				
Fire/Safety Equipment in place including any required PPE?				
Has appropriate training been completed for operations maintenance, and other personnel as required in this project?				
Have processes or equipment been shutdown that are required for safe operations, have they been placed back in service?				
Have all Lock Out Tag Out locks that were installed, removed?				
Have all packing materials, shipping blocks, stops, preservatives, etc. been removed from equipment?				
Where required in the scope of work, have temporary filters or screens for startup been installed?				
Are hot surfaces adequately protected from exposure to flammable materials?				
Are hot surfaces (140° F and greater) adequately protected from exposure to employees?				
Have all handrails, toe boards and floor grating been installed where needed?				
Has all insulation, called for in the scope of work been installed? i.e., Personnel protection, Winterizing, and Heat conservation.				
Are ladders, scaffolds, platforms, ramps, stairs, and walkways caged and guarded adequately, do they meet Chevron's (SID) safety in design standards?				
Have the action items in the MOC been completed?				
Does the MOC need to be updated (Evergreen) for any changes?				
Have MSDS for new materials been added to the data base				
Engineering	**YES**	**NO**	**N/A**	**INITALS**
Do Pressure vessels have name plates with code stamp and the correct pressure/temperature rating as shown on the P&ID's?				
Does the installation of fired and pressure vessels comply with legal requirement and codes?				

All legal requirements and all permits complete?				
Where required and in accordance with design, have anchor bolts and tie-downs been installed to secure pressure vessels or equipment, correct size & type of bolt? (i.e. A-325 for structural)				
Are PSV's set at the relieving pressure designated on the P&ID's? (At or below the pressure rating of the vessel or the lowest pressure rated component it is intended to protect.) Are PSV's in the correct location per P&ID's?				
Are backpressure valves and/or PSV's piped to a closed top tank?				
If the PSV outlet piping is connected to a network, has it been designed for the backpressures per API 520?				
Have liquid traps and freezing potential been designed out?				
Have repairs to the separators/equipment been made as per code and specifications and is documentation complete?				
Has hydro test fluid or other material, not compatible with the operation, been purged from vessels, equipment or piping?				
Are internal attachments (e.g. trays, packing, mist pads, chimney trays) in place and secured?				
Have all man ways been properly closed and nozzle connections bolted up correctly?				
Is piping supported so as to not put additional stress on vessels, exchangers or equipment nozzles?				
Are the utility systems (flare, electrical, process water, etc.) properly sized, and connected at the correct points?				
Are Cathodic Protection systems designed, installed and reconnected properly.				
Are the dikes around the tanks constructed to contain 150% capacity of the largest tank volume?				
Equipment	**YES**	**NO**	**N/A**	**INITALS**
Has proper lubrication oil been used and added to the proper level?				
For internal combustion engines, has engine coolant been added to the correct level?				
Have all equipment filter elements been installed (air, oil, coolant, fuel)?				
Has alignment and rotation of equipment been checked?				
Are drive belts installed and properly tightened?				
If required, is equipment properly grouted in place and/or hold down bolts installed?				
Is belt driven equipment "sheaved" to run at the specified RPM as per the design?				
Are current operating conditions within equipment operating limits? (i.e. insure that temperature, pressure, flow, concentration, etc. have not changed appreciably since design)?				

Has loose material been removed from near air intakes, air-cooled exchangers, rotating equipment, or other areas where it could cause damage when equipment is started?				
Where required, has an inlet piping strainer been installed to protect equipment?				
Is the equipment accessible for maintenance and removable for repairs?				
Does piping and equipment have adequate drains and vents?				
Is rotating equipment properly guarded per Chevron SID?				
Have maintenance locks and tags been removed?				
Has a pressure and leak testing been performed on equipment?				
Has the equipment been installed in accordance with the Corporate Spacing Guidelines? If not, has the FE Manager approved the variance?				
Instrumentation and Electrical	**YES**	**NO**	**N/A**	**INITALS**
Have alarm and shut down system been checked for fail safe operation?				
Does the electrical system comply with the area electrical classification?				
Do control valves fail safe upon loss of power as per P&ID?				
Do all tanks have high level indication, alarm and callouts?				
Do ESD valves fail safe in correct position as per P&ID?				
Is the facility equipped with high level shutdown of producing wells?				
Is all appropriate instrumentation/measurement equipment open to process? (Sensing ports & valves open)				
Does the electrical work comply with legal requirements and company practices?				
Are all electrical connections secure and ready for service?				
Has the newly installed or modified equipment been tied-in to the ESD system? Tested and documented?				
Are all electrical covers and housings installed properly and bolts in place and tight?				
Have critical controls and shutdowns been function tested?				
Have conduit seals been poured?				
Are exposed non-current carrying metallic parts of electrical equipment, conduit systems, cable trays, vessels, skids and both ends of metallic cable armor grounded properly?				
Are all cable trays, conduits, junction boxes, transformers, starters, etc. supported rigidly in place (do not use process or utility piping for support)?				
Is all wiring routed a sufficient distance from hot surfaces to prevent damage?				
Are motors, control stations, motor control centers, starters, breakers, junction boxes, apparatus and devices used for operation of control circuits and appliances properly identified with nameplates?				

Has the I&E system been installed as indicated in the change request, drawings and hazard review?				
Piping and Valves	**YES**	**NO**	**N/A**	**INITALS**
All systems tested for pressure and leak integrity as required in the scope of work?				
Has required stress relieving been performed after welding?				
Have appropriate blinds, plugs, spectacles, spades and skillets been removed from the system and the connections made up?				
Has hydro test fluid or other material, not compatible with the operations, been purged from the system?				
Have all hydro test connections been sealed following final hydro test?				
When appropriate, have lines been cleaned/flushed of material harmful to downstream equipment or processes? (i.e. weld slag, dust/dirt, hydro test fluid, packing material, trash, etc.)?				
Are bypass valves around equipment or control valves closed? Or in the correct position for startup operations?				
Are open-ended valves and piping like vents and drains, Plugged, blinded, or capped?				
Are threaded connections adequately protected against fatigue failure (e.g. braced)?				
Are piping supports adequate to prevent damage or undue stress due to pipe span, vibration, valve weight, misalignment, etc.?				
If a block valve is present in a relief line, is the valve locked open?				
Where PSVs are relieved to atmosphere, is the discharge routed to prevent injury or damage?				
Are valves indicated as “CSC” (Car Sealed Closed) on P&ID’s locked closed? “LO” Lock Open may be used as alternate.				
Are valves indicated as “CSO” (Car Sealed Open) on P&ID’s locked open? “LC” Lock Closed may be used as an alternate.				
Are dissimilar metals (such as between aluminum fittings, conduits, etc and steel) kept from contact to prevent galvanic corrosion?				
Has all buried piping, conduit and wiring been surface indicated and indicated on drawings. Pictures are a good addition.				
Is the piping system anchored at changes in direction and dead-ends, as per design, to prevent damage to systems?				
Operations	**YES**	**NO**	**N/A**	**INITALS**
Have operator’s received appropriate training in unique hazards of the process and equipment operating procedures?				
Have new to the location controls/equipment been introduced at this facility? If so, has there been adequate training conducted on the new equipment and operation?				

Has all process safety information (MSDS, P&ID's, Plot plans, operating limits and parameters, alarms, safe practices and shutdowns etc.) been made available to all affected operators, updated and checked?				
Are appropriate procedures in place? (start up, safety, environmental, operating, maintenance and emergency)				
Is startup of this process/equipment compatible with simultaneous operations (e.g. drilling, hot work, plant, compression, operations, etc.)?				
Are employees and contractors whose jobs are impacted by this change, knowledgeable of the change?				
If startup of the process or equipment has an impact on operations, have the appropriate personnel been notified?				

Management of Change (MOC) Report Form Chevron Environmental Management Company (CEMC)	
Communication:	
Change Owner	

Coordinate the Communication of the Change:		
Person Responsible	**Target Date**	**Date Completed**

Method(s) of Communication: ***(Complete fields for all types used)***			
	Person Responsible	**Target Date**	**Date Completed**
Email			
Safety Meeting			
Training			
Signage			
Other *(Describe)*			

Other Organizations Impacted by the Change: *(e.g., CVX opco, EPA, Other Contractor Companies)*				
	Organization(s) Name	**Date**	**Contact Name/Department**	**Type of Communication**
1				
2				
3				
4				

Verification of Communication:		
Person Responsible	**Target Date**	**Date Completed**

Notes: *(Describe how the communication plan was completed and it's effectiveness)*

Appendix H

Completed Management of Change Documentation

Appendix I

OMM Manual Management of Change Form

OMM Manual Management of Change Form
Groundwater Remediation System
Former Tappan Terminal Site
Hastings on Hudson, New York

Text			
Modified/Added Section	***Effected***	***Reason for Change***	***Date***
2.4.2	12, 13	Addition of permanent air monitoring sensor information	
4.1.2	16	Addition of site security fencing information	
4.2.3.5	21	Addition of air monitoring sensor calibration information	

Tables		
Modified/Added Table	***Reason for Change***	***Date***
Remote Monitoring Table	Changed units on table to reflect sytem readings	2/1/2013
Preventative Maintenance Table	Included Hydrogen Sulfide, Lower Explosive Limit, and Volatile Organic Compound Sensors calibration requirements in the table.	4/19/2013

Figures		
Modified/Added Figure	***Reason for Change***	***Date***
Record Drawings	As-Built Survey Completed	5/1/2013
Record Drawings	Addition of new H2S, LEL, and VOC sensors & interlocks	9/18/2013

Appendices		
Modified/Added Appendix	***Reason for Change***	***Date***
SOP 21	Developed new SOP for use of 5 gas meter when entering System Enclosure	3/14/2013
Appendix E, Annual Alarm Testing	Addition of H2S, LEL, and VOC sensor alarm testing. Also T-200 and T-300 Vacuum Switch alarm testing	4/18/2013
SOP 21	Edited SOP for use with permanent air monitoring sensors and System Enclosure entrance procedures.	8/14/2013
SOP 22	Edited SOP for System Enclosure entrance procedures if hazardous atmosphere present.	8/14/2013
Appendix A	Addition of VOC data sheet, Oxygen Generation & Receiving tank plaque photographs, KCF oil seperator	8/14/2013
Appendix F	Added Kaeser FG460 Food Grade Oil MSDS, H2S Cal Gas MSDS, LEL Cal Gas MSDS	8/14/2013

Notes:

1. Updated pages, tables, figures and/or appendices subject to modification have been included with this form. Existing portions of the OMM Manual subject to modification are to be replaced with the updated portions upon receipt. Obsolete pages, tables, figures and appendices are to be discarded.
2. OMM Manual updates will occur on an annual basis

Appendix J

System Operator Training Certificates

Appendix K

USEPA Injection Well Permit

UNITED STATES ENVIRONMENTAL PROTECTION AGENCY
REGION 2
290 BROADWAY
NEW YORK, NY 10007-1866

JUL 11 2012

William McCune
Arcadis
6723 Towpath Road, PO Box 66
Syracuse, NY 13214

Re: Underground Injection Control (UIC) Program Regulation
Former Tappan Terminal Site (**Reference UICID: 09NY11904004**)
1 Railroad Ave., Hastings-on-Hudson, NY 10706
Westchester County
Authorization to Inject

Dear McCune:

This letter serves to inform you that the U.S. Environmental Protection Agency is in receipt of inventory information addressing wells authorized by rule located at the above-referenced facility in accordance with 40 Code of Federal Regulations (CFR) §144.26. The operation of the following Underground Injection Control wells are authorized by rule, pursuant to 40 CFR §144.24:

> **Four (4) wells (IW-1, IW-2, IW-3, and IW-4) and five (5) trenches to inject oxygenated water into the subsurface for remediation of the groundwater. The oxygenated water will be used to biodegrade chlorobenzene. The total volume of oxygenated water will be approximately 168,000,000 gallons. The design injection rate for each well will be five (5) gallons per minute (gpm) while the injection rate for each trench will be ten (10) gpm.**

Should any conditions change in the operation of any of the wells listed above (such as injectate composition, closure of the well, injection of cooling water greater than 150 degrees Fahrenheit, construction of additional wells, etc.) you are required to notify this office within five (5) days. Any accidental spills into a well should be reported within twenty-four (24) hours after the event. Change in operation information should be addressed to:

Evangelia Palagian, Acting Chief
Ground Water Compliance Section
United States Environmental Protection Agency
290 Broadway, 20th Floor
New York, NY 10007-1866
Re: 09NY11904004
Attn: Luis Rodriguez

Should you own or operate **other** facilities using underground injection wells, please use the enclosed inventory form (EPA Form 7520-16) and instructions, copy for multiple facilities, and submit them to the address listed above. These documents can also be found on the internet at:

http://www.epa.gov/safewater/uic/pdfs/7520-16.pdf
http://www.epa.gov/region02/water/compliance/supplemental_instructions_inventory.pdf
http://www.epa.gov/region02/water/compliance/wellclasstypetable_inventoryc_form

Failure to respond to this letter truthfully and accurately within the time provided may subject you to sanctions authorized by federal law. Please also note that all information submitted by you may be used in an administrative, civil judicial, or criminal action. In addition, making a knowing submission of materially false information to the U.S. Government may be a criminal offense.

Should you have any questions, please contact Luis Rodriguez of my staff at (212) 637-4274 or rodriguez.luis@epa.gov.

Sincerely,

Evangelia Palagian, Acting Chief
Ground Water Compliance Section

Enclosure

cc: Thomas Rudolph, P.E.
NYSDEC, Region 3
100 Hillside Avenue, Suite 1W
White Plains, NY 10603

Marian Pompa, P.E.
Westchester County Health Dept
145 Huguenot Street
New Rochelle, NY 10801

Mark Stella
Chevron Environmental Management Co.
4800 Fournance Place
Bellaire, TX 77401

USEPA REGION II SUPPLEMENTAL INSTRUCTIONS FOR COMPLETING INVENTORY OF INJECTION WELLS

EPA FORM 7520-16 (Rev. 8-01)

SECTION 2. FACILITY ID NUMBER: Leave blank. EPA will assign an ID number.

SECTION 3. TRANSACTION TYPE: Check either First Time Entry or Entry Change. If this is the first time you have submitted this form for your injection wells(s), check First Time Entry and fill in all the appropriate information. If you are modifying information you sent in before, check Entry Change, fill in the Facility Name and Location and fill in the information that has changed. (Note: If the facility name has changed, in the blank space in the upper left hand corner write the prior facility name under which the form was first submitted, and the date it was submitted.)

SECTION 4. FACILITY NAME AND LOCATION: If you know the latitude and longitude of your facility, fill in line 4C and 4D. You do not need to fill in 4E, Township/Range. If you know the Numeric County Code, fill in line 4I, otherwise just write in the name of the County.

SECTION 5. LEGAL CONTACT: Under 5A, if the Legal Contact you are identifying owns the land, check Owner. If the Legal Contact owns and/or operates the business but someone else owns the land, check Operator. Under 5I, "Private" means privately owned. "Public" means owned by local/municipal government. "State" and Federal" mean owned by state/federal government.

SECTION 6. WELL INFORMATION: Under 6A CLASS AND TYPE, use the attached table "USEPA Region II List of Class V Injection Well Types" to determine the **CLASS V** "TYPE". Enter the appropriate Type Code in 6A (the Type Code does not have to fit within the two boxes on the Inventory Form). Select the Class V well type(s) that most accurately fit the well(s) at your facility. When reviewing the attached table and making your determination, be sure to consider all of the fluids entering the well or having the potential to enter the well. For example, Storm Water Drainage Wells located in industrial areas which are susceptible to spills, leaks or other chemical discharges are inventoried as Industrial Drainage Wells. If Cesspools and Septic Systems are receiving fluids other than sanitary waste (human excreta), that should be noted in the Additional Information below.

IMPORTANT: ADDITIONAL INFORMATION

In order to ensure that the **Class V** Well(s) at your facility are accurately inventoried you must also submit on a separate piece of paper: (1) a brief description characterizing your facility and the types of activities conducted; (2) a brief description of what you use each of your injection well(s) for; (3) a brief description of the types of fluids that enter, or have the potential to enter, each of your injection well(s). (Note: wells with the same information may be grouped).

If you require assistance, please contact EPA Region II at (212) 637-3093.

USEPA REGION II LIST OF
CLASS V INJECTION WELL TYPES

TYPE CODE	NAME	DESCRIPTION
INDUSTRIAL/COMMERCIAL/UTILITY DISPOSAL WELLS		
5X28	MOTOR VEHICLE WASTE DISPOSAL WELLS	- wells that receive or have received fluids from vehicular repair or maintenance activities, such as an auto body repair shop, automotive repair shop, new and used car dealership, specialty repair shop (e.g., transmission and muffler repair shop), or any facility that does any vehicular repair work.
5W20	INDUSTRIAL PROCESS WATER & WASTE DISPOSAL WELLS	- used to dispose of a wide variety of wastes and wastewater from industrial, commercial, or utility processes. Industries include refineries, chemical plants, smelters, pharmaceutical plants, laundromats and dry cleaners, tanneries, carwashes, laboratories, funeral homes, etc. Specify industry <u>and</u> waste stream.
5A19	COOLING WATER RETURN FLOW WELLS	- used to inject water which was used in a cooling process.
DRAINAGE WELLS		
5D4	INDUSTRIAL DRAINAGE WELL	- wells located in industrial areas which primarily receive storm water runoff but are susceptible to spills, leaks, or other chemical discharges.
5D2	STORM WATER DRAINAGE WELLS	- receive storm water runoff from paved areas, including parking lots, streets, residential subdivisions, building roofs, highways, etc.
5F1	AGRICULTURAL DRAINAGE WELLS	- receive irrigation tailwaters, other field drainage, animal yard, feedlot, or dairy runoff, etc.
5D3	IMPROVED SINKHOLES	- receive storm water runoff from developments located in karst topographic areas.
5G30	SPECIAL DRAINAGE WELLS	- used for disposing water from sources other than direct precipitation–such as landslide control drainage wells, potable water tank overflow drainage wells, swimming pool drainage wells, and lake level control drainage wells.

DOMESTIC WASTEWATER DISPOSAL WELLS		
5W9	UNTREATED SEWAGE WASTE DISPOSAL	- receive raw sewage wastes from pumping trucks or other vehicles which collect such wastes from single or multiple sources. (No treatment)
5W10	LARGE CAPACITY CESSPOOLS	- large capacity cesspools including multiple dwelling, community or regional cesspools, or other devices that receive sanitary wastes, containing human excreta, which have an open bottom and sometimes perforated sides. Includes non-residential cesspools which receive solely sanitary waste and have the capacity to serve greater than or equal to 20 persons a day. DOES NOT apply to single family residential cesspools.
5W11	SEPTIC SYSTEM (UNDIFFERENTIAT-ED DISPOSAL METHOD)	- used to inject the waste or effluent from a multiple dwelling, business establishment, community or regional business establishment septic tank to an undetermined final discharge point. Includes non-residential septic systems which receive solely sanitary waste and have the capacity to serve greater than or equal to 20 persons a day. DOES NOT apply to single family residential septic systems. (Primary Treatment)
5W31	SEPTIC SYSTEMS (WELL DISPOSAL METHOD)	- used to inject the waste or effluent from a multiple dwelling, business establishment, community or regional business establishment septic tank to a well-- examples of wells include dry wells, seepage pits, cavitettes, etc. The largest surface dimension is less than or equal to the depth dimension. Includes non-residential septic systems which receive solely sanitary waste and have the capacity to serve greater than or equal to 20 persons a day. DOES NOT apply to single family residential septic systems. (Primary Treatment)
5W32	SEPTIC SYSTEMS (DRAIN FIELD DISPOSAL METHOD)	- used to inject the waste or effluent from a multiple dwelling, business establishment , community or regional business establishment septic tank to a drainfield--examples of drainfields include drain or tile lines, and trenches. Includes non-residential septic systems which receive solely sanitary waste and have the capacity to serve greater than or equal to 20 persons a day. DOES NOT apply to single family residential septic systems. (Primary Treatment)
5W12	DOMESTIC WASTEWATER TREATMENT PLANT EFFLUENT DISPOSAL	- dispose of treated sewage or domestic effluent from small package plants up to large municipal treatment plants. Final discharge points may include drywells or leachfields. (Secondary or further treatment)

GEOTHERMAL REINJECTION WELLS		
5A5	ELECTRIC POWER REINJECTION WELLS	- reinject geothermal fluids used to generate electric power.
5A6	DIRECT HEAT REINJECTION WELLS	- reinject geothermal fluids used to provide heat for large buildings or developments.
5A7	HEAT/PUMP/AIR CONDITIONING RETURN FLOW WELLS	- reinject groundwater used to heat or cool a building in a heat pump system.
5A8	GROUNDWATER AQUACULTURE RETURN FLOW WELLS	- reinject groundwater or geothermal fluids used to support aquaculture. Non-geothermal aquaculture disposal wells are also included in this category (e.g., Marine aquariums in Hawaii use relatively cool sea water).
RECHARGE WELLS		
5R21	AQUIFER RECHARGE WELLS	- used to recharge depleted aquifers and may inject fluids from a variety of sources such as lakes, streams, domestic wastewater treatment plants, other aquifers, etc.
5B22	SALINE WATER INTRUSION BARRIER WELLS	- used to inject water into fresh water aquifers to prevent intrusion of salt water into fresh water aquifers.
5S23	SUBSIDENCE CONTROL WELLS	- used to inject fluids into a non-oil or gas producing zone to reduce or eliminate subsidence associated with overdraft of fresh water and not used for the purpose of oil or natural gas production.
OIL FIELD PRODUCTION WASTE DISPOSAL WELLS		
5X17	AIR SCRUBBER WASTE DISPOSAL WELLS	- inject waste from air scrubbers used to remove sulfur from crude oil which is burned in steam generation for thermal oil recovery projects. (If injection is used directly for enhanced recovery and not just disposal it is a Class II well.)
5X18	WATER SOFTENER REGENERATION BRINE DISPOSAL WELLS	- inject regeneration waste from water softeners which are used to improve the quality of brines used for enhanced recovery. (If injection is used directly for enhanced recovery and not just disposal it is a Class II well.)

MINERAL AND FOSSIL FUEL RECOVERY RELATED WELLS		
5X13	MINING, SAND, OR OTHER BACKFILL WELLS	- used to inject a mixture of water and sand, mill tailings, and other solids into mined out portions of subsurface mines whether what is injected is radioactive waste or not. Also includes special wells used to control mine fires and acid mine drainage wells.
5X14	SOLUTION MINING WELLS	- used for in situ solution mining in conventional mines, such as slopes leaching.
5X15	IN-SITU FOSSIL FUEL RECOVERY WELLS	- used for in situ recovery of coal, lignite, oil shale, and tar sands.
5X16	SPENT BRINE RETURN FLOW WELLS	- used to reinject spent brine into the same formation from which it was withdrawn after extraction of halogens or their salts.
MISCELLANEOUS WELLS		
5X25	EXPERIMENTAL TECHNOLOGY WELL	- wells used in experimental or unproven technologies such as pilot scale in situ solution mining wells in previously unmined areas.
5X26	AQUIFER REMEDIATION RELATED WELLS	- wells used to prevent, control, or remediate aquifer pollution, including but not limited to Superfund sites.
5X29	ABANDONED DRINKING WATER WELLS	- used for disposal of fluids. Specify well purpose and injected fluids.
5X27	OTHER WELLS	- any other unspecified Class V wells. Specify well type/purpose and injected fluids.

SOURCE: Prepared by EPA Region II. Based on 1987 *Report to Congress* on Class V Wells; and 40 C.F.R. §144.81.

May 11, 2004 (3:47pm)G:/User/Share/DECADIV\DECA-WCB\GWCS\Well Class Type Table for Inventory Form5.wpd

Type or print all information. See reverse for instructions.

OMB No. 2040-0042 Approval Expires 11/30/2014

INVENTORY OF INJECTION WELLS

EPA

UNITED STATES ENVIRONMENTAL PROTECTION AGENCY
OFFICE OF GROUND WATER AND DRINKING WATER

(This information is collected under the authority of the Safe Drinking Water Act)

1. DATE PREPARED *(Year, Month, Day)*

2. FACILITY ID NUMBER

PAPERWORK REDUCTION ACT NOTICE

The public reporting burden for this collection of information is estimated at about 0.5 hour per response including time for reviewing instructions, searching existing data sources, gathering and maintaining the data needed, and completing and reviewing the collection of information. Send comments regarding the burden estimate or any other aspect of this collection of information, includingsuggestions for reducing this burden, Director, Collection Strategies Division (2822), U.S. Environmental Protection Agency, 1200 Pennsylvania Avenue, NW, Washington, DC 20460, and to the Office of Management and Budget, Paperwork Reduction Project, Washington, DC20503.

3. TRANSACTION TYPE *(Please mark one of the following)*

- ☐ Deletion
- ☐ First Time Entry
- ☐ Entry Change
- ☐ Replacement

4. FACILITY NAME AND LOCATION

A. NAME *(last, first, and middle initial)*

B. STREET ADDRESS/ROUTE NUMBER

C. LATITUDE

DEG	MIN	SEC
		.

D. LONGITUDE

DEG	MIN	SEC
		.

E. TOWNSHIP/RANGE

TOWNSHIP	RANGE	SECT	1/4 SECT

F. CITY/TOWN

G. STATE

H. ZIP CODE

I. NUMERIC COUNTY CODE

J. INDIAN LAND *(mark "x")* ☐ Yes ☐ No

5. LEGAL CONTACT:

A. TYPE *(mark "x")* ☐ Owner ☐ Operator

B. NAME *(last, first, and middle initial)*

C. PHONE *(area code and number)*

D. ORGANIZATION

E. STREET/P.O. BOX

F. CITY/TOWN

G. STATE

H. ZIP CODE

I. OWNERSHIP *(mark "x")*

- ☐ PRIVATE
- ☐ PUBLIC
- ☐ SPECIFY OTHER
- ☐ STATE
- ☐ FEDERAL

6. WELL INFORMATION:

A. CLASS AND TYPE		B. NUMBER OF WELLS		C. TOTAL NUMBER OF WELLS	D. WELL OPERATION STATUS				
		COMM	NON-COMM		UC	AC	TA	PA	AN
				0					
				0					
				0					
				0					
				0					
				0					
				0					

COMMENTS *(Optional)*:

KEY:

DEG = Degree
MIN = Minute
SEC = Second

SECT = Section
1/4 SECT = Quarter Section

COMM = Commercial
NON-COMM = Non-Commercial

AC = Active
UC = Under Construction
TA = Temporarily Abandoned
PA = Permanently Abandoned and Approved by State
AN = Permanently Abandoned and not Approved by State

SECTION 1. DATE PREPARED: Enter date in order of year, month, and day.

SECTION 2. FACILITY ID NUMBER: In the first two spaces, insert the appropriate U.S. Postal Service State Code. In the third space, insert one of the following one letter alphabetic identifiers:

D - DUNS Number,
G - GSA Number, or
S - State Facility Number.

In the remaining spaces, insert the appropriate nine digit DUNS, GSA, or State Facility Number. For example, A Federal facility (GSA - 123456789) located in Virginia would be entered as : VAG123456789.

SECTION 3. TRANSACTION TYPE: Place an "x" in the applicable box. See below for further instructions.

Deletion. Fill in the Facility ID Number.
First Time Entry. Fill in all the appropriate information.
Entry Change. Fill in the Facility ID Number and the information that has changed.
Replacement.

SECTION 4. FACILITY NAME AND LOCATION:

A. **Name.** Fill in the facility's official or legal name.
B. **Street Address.** Self Explanatory.
C. **Latitude.** Enter the facility's latitude (all latitudes assume North Except for American Samoa).
D. **Longitude.** Enter the facility's longitude (all longitudes assume West except Guam).
E. **Township/Range.** Fill in the complete township and range. The first 3 spaces are numerical and the fourth is a letter (N,S,E,W) specifying a compass direction. A township is North or South of the baseline, and a range is East or West of the principal meridian (e.g., 132N, 343W).
F. **City/Town.** Self Explanatory.
G. **State.** Insert the U.S. Postal Service State abbreviation.
H. **Zip Code.** Insert the five digit zip code plus any extension.

SECTION 4. FACILITY NAME & LOCATION (CONT'D.):

I. **Numeric County Code.** Insert the numeric county code from the Federal Information Processing Standards Publication (FIPS Pub 6-1) June 15, 1970, U.S. Department of Commerce, National Bureau of Standards. For Alaska, use the Census Division Code developed by the U.S. Census Bureau.
J. **Indian Land.** Mark an "x" in the appropriate box (Yes or No) to indicate if the facility is located on Indian land.

SECTION 5. LEGAL CONTACT:

A. **Type.** Mark an "x" in the appropriate box to indicate the type of legal contact (Owner or Operator). For wells operated by lease, the operator is the legal contact.
B. **Name.** Self Explanatory.
C. **Phone.** Self Explanatory.
D. **Organization.** If the legal contact is an individual, give the name of the business organization to expedite mail distribution.
E. **Street/P.O. Box.** Self Explanatory.
F. **City/Town.** Self Explanatory.
G. **State.** Insert the U.S. Postal Service State abbreviation.
H. **Zip Code.** Insert the five digit zip code plus any extension.
I. **Ownership.** Place an "x" in the appropriate box to indicate ownership status.

SECTION 6. WELL INFORMATION:

A. **Class and Type.** Fill in the Class and Type of injection wells located at the listed facility. Use the most pertinent code (specified below) to accurately describe each type of injection well. For example, 2R for a Class II Enhanced Recovery Well, or 3M for a Class III Solution Mining Well, etc.
B. **Number of Commercial and Non-Commercial Wells.** Enter the total number of commercial and non-commercial wells for each Class/Type, as applicable.
C. **Total Number of Wells.** Enter the total number of injection wells for each specified Class/Type.
D. **Well Operation Status.** Enter the number of wells for each Class/Type under each operation status (see key on other side).

CLASS I Industrial, Municipal, and Radioactive Waste Disposal Wells used to inject waste below the lowermost Underground Source of Drinking Water (USDW).

TYPE	1I	Non-Hazardous Industrial Disposal Well.
	1M	Non-Hazardous Municipal Disposal Well.
	1H	Hazardous Waste Disposal Well injecting below the lowermost USDW.
	1R	Radioactive Waste Disposal Well.
	1X	Other Class I Wells.

CLASS II Oil and Gas Production and Storage Related Injection Wells.

TYPE	2A	Annular Disposal Well.
	2D	Produced Fluid Disposal Well.
	2H	Hydrocarbon Storage Well.
	2R	Enhanced Recovery Well.
	2X	Other Class II Wells.

CLASS III Special Process Injection Wells.

TYPE	3G	*In Situ* Gasification Well
	3M	Solution Mining Well.

CLASS III (CONT'D.)

TYPE	3S	Sulfur Mining Well by Frasch Process.
	3T	Geothermal Well.
	3U	Uranium Mining Well.
	3X	Other Class III Wells.

CLASS IV Wells that inject hazardous waste into/above USDWs.

TYPE	4H	Hazardous Facility Injection Well.
	4R	Remediation Well at RCRA or CERCLA site.

CLASS V Any Underground Injection Well not included in Classes I through IV.

TYPE	5A	Industrial Well.
	5B	Beneficial Use Well.
	5C	Fluid Return Well.
	5D	Sewage Treatment Effluent Well.
	5E	Cesspools (non-domestic).
	5F	Septic Systems.
	5G	Experimental Technology Well.
	5H	Drainage Well.
	5I	Mine Backfill Well.
	5J	Waste Discharge Well.